KB821K1,KB825K5,KB828K8

Single Lever Handle With Sprayer W/O Soap Diepenser Kitchen Faucet
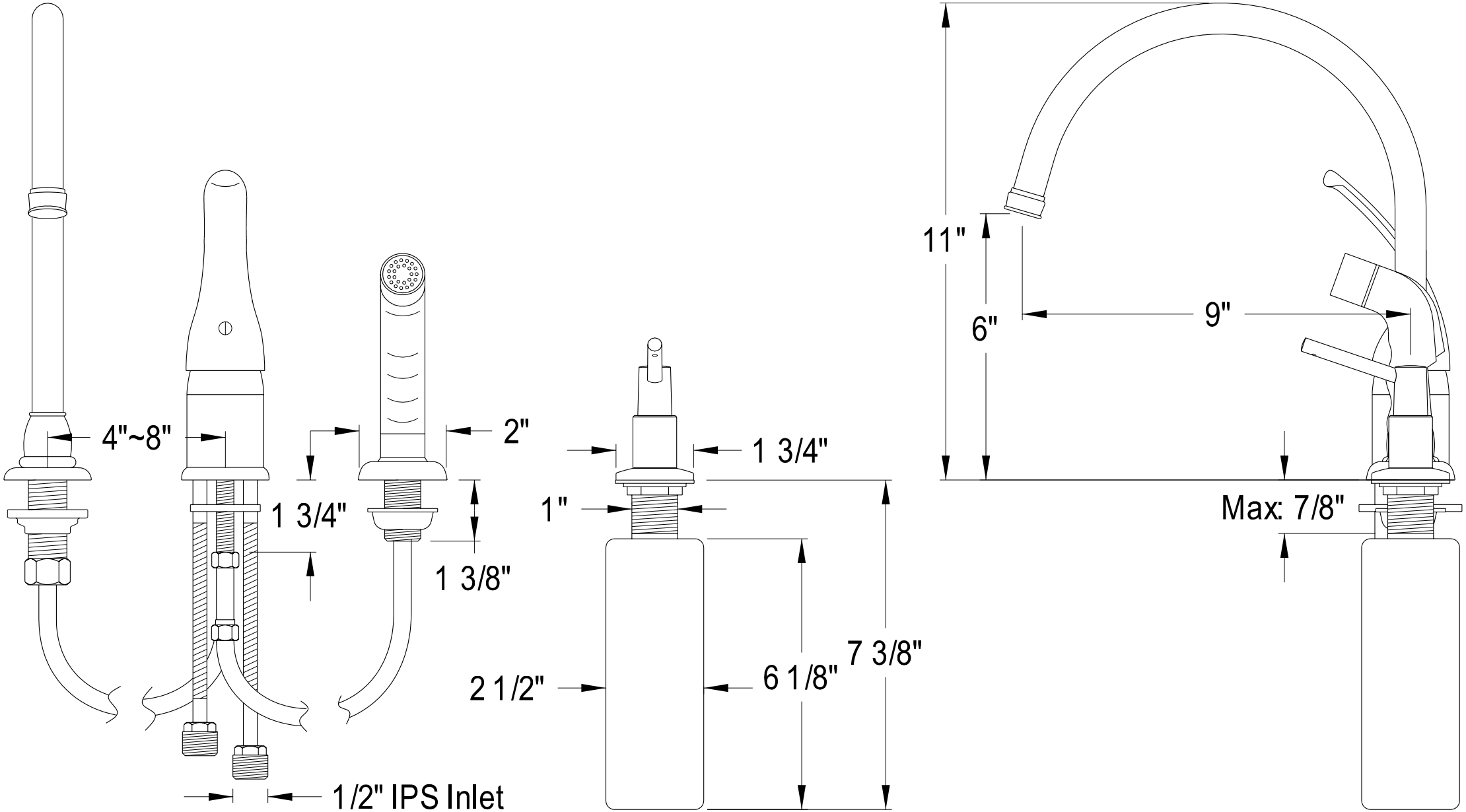
Item#	Handle Type	Sprayer	Soap	Finish
KB821K1	Euro Loop	Chrome	Side / Chrome	Chrome
KB825K5	Euro Loop	Oil Rubbed Bronze	Side / Oil Rubbed Bronze	Oil Rubbed Bronze
KB828K8	Euro Loop	Satin Nickel	Side / Satin Nickel	Satin Nickel