SPECIFICATIONS

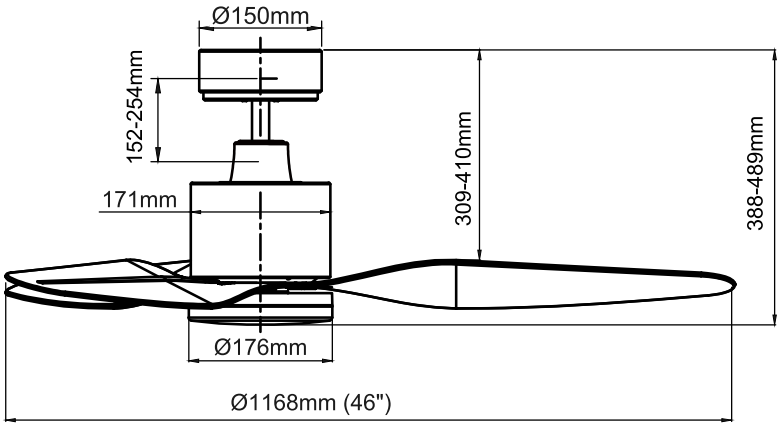

Product Name	Ceiling Fan
Rated Voltage	110V~120V
Motor Power	30W
Wind Speed Level	1~6
Control Method	ALEXA, GOOGLE, APP, Remote Control
N.W & G.W.	N.W. = 11.5lbs; G.W. = 13.7 lbs
Length of Downrods	6" & 10"
Type of Motor	DC
Sound Level	30dB
Fan Material	Durable 3 ABS Plastic Fan Blades

SKU: QT664-52-BG/QT664-52-B/QT664-52-W/QT664-52-WG
Model: 46-YJ325-BG/46-YJ325-BK/46-YJ325-WH/46-YJ325-WG
ETL MODEL: YJ325

Instruction Manual

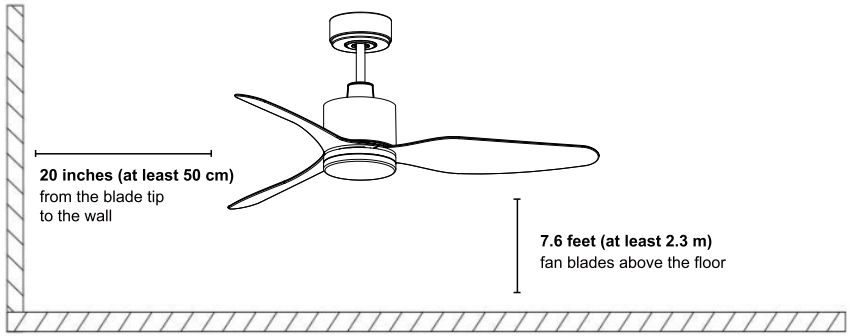

CONTACT INFORMATION We want to hear from you!

Feel free to contact us if you have any problems using our product(s) or would like to know more about our brand.

We will be more than happy to provide you with first class pre-sales & after -sales service 24*7.

E-mail: **anna-co@foxmail.com**
For any problems about this product, you can contact this email

Installation Video

APP Connection

SAFETY INFORMATION:

WARNING

SAFETYINFORMATION:

1.Do not install the fan with wet hands.
2.Keep children away from your working area.
3.Do not insert foreign objects between the rotating fan blades.
4.Do not bend the fan blades when installing or cleaning the fan.
5.Do not disassemble or modify this product or use non-original parts without permission.
6.Make sure that the installation location allows the fan blades to rotate with out obstacles.
7.To reduce the risk of personal injury,attach the fan directly to the building's support structure.
8.To reduce the risk of fire or electric shockturn off the power to the fuse box or circuit breaker before installing the fan.
9.Before connecting the power supply,make sure that the power supply used matches the specifications of the ceiling fan.
10.All wiring must comply with national and local electrical codesANSI/NFPA70. If you are not familiar with wiring,plase use a qualified electrician.
11.Properly dispose of the fan's packaging material.Make sure the ceiling fan is firmly secure to the ceiling.Double check all connections before you restore power. Turn off the fan and wait for the blades to stop completely before performing any mainte-nance or cleaning.
12.Using power supply 120V/60Hz.

CONTENTS:

SAFETY INFORMATION	01
FAN STRUCTURE DRAWING	02
INSTALLATION INSTRUCTION	03
REMOTE CONTROL MANUAL	08
SMART APP CONNECTION INSTRUCTION	09
APP CONTROL MANUAL	11
VOCIE COMMAND	12
SPECIFICATIONS & TROUBLESHOOTING	13

PROBLEM	REASON/PHENOMENON	POSSIBLE SOLUTION
Fan shaking	1.Bade screw 2!D ownrod screw 3.Unbalanced	13. Confirm Blade Screw Positions: Double-check the correct positioning of the blade screws. If necessary, reinstall them. 14. Tighten Screws Above and Below the Downrod: Securely tighten the screws both above and below the downrod. 15. Use Balancing Kit Accessory for Balance: If needed, use the provided balancing kit accessory to adjust the balance of the fan.
Fan not moving	Main cables not connected	16. Check Main and Sub Circuit Breakers or Fuse: Verify the status of the main and sub circuit breakers or fuses. 17. Examine Line Wire Connections: Check the connections of the line wires to the fan and the switch house. Reconnect any motor-related wires and terminals as necessary. 18. Ensure Remote Control Pairing: Confirm that the remote control is properly paired with the fan.
Fan noisy	1. Housing screw loose. 2!W ire nut connections rattles against each other. 3. Canopy touches the ceiling.	19. Tighten All Screws Securely: Ensure that all screws are tightened securely. 20. Neatly Store Wire Nut Connections: Properly organize and store the wire nut connections. 21. Check Canopy Position: Verify that the canopy is not touching or positioned too closely to the ceiling.
Remote control not working	1!Remote &receiver pairing out. 2!Battery not installed. 3. Battery weak.	22. Re-Pair Remote Control: With the fan's power on, press and hold the top OFF button on the remote control for 15 seconds to initiate the pairing process. 23. Verify AAA Battery and Polarity: Ensure that the remote control's battery is of the AAA type and that it is installed with the correct polarity. Make sure the battery has a power level of more than 30%. 24. Replace the Battery: If the remote control still does not work, replace the battery with a new one.
Receiver	Not working	25. Inspect Wires and Terminals: Examine the wires and terminals, and reconnect them. If the issue persists, please contact customer service for further assistance.

TROUBLESHOOTING:

PLEASE CHECK THE FOLLOWING BEFORE LODGING A SERVICE REPORT

PROBLEM	REASON/PHENOMENON	POSSIBLE SOLUTION
Lighting	Light not working	1. Check Receiver Pairing: Verify whether the receiver is properly paired with the remote control. 2. Inspect and Reconnect Light-Related Wire Connections: Examine and reconnect the wire connections associated with the lights.
	Light flashing	3. Check Light-Related Wires for Damage:Inspect the wires related to the lights for any signs of damage. If any wires are damaged, please use electrical tape to seal them.
Network connection	Connectionless	4. Download and Install the Tuya Smart App: Download and install the Tuya Smart App, and prepare the remote control for setup. 5. Ensure Bluetooth and Fan Power: Keep your cell phone's Bluetooth activated, and ensure that the ceiling fan has a stable power source to prepare for activation. 6. Use 2.4GHz WIFI (Not 5GHz): Connect to a 2.4GHz WIFI network (not 5GHz). If the signal strength is weak, you can also try enabling your cell phone's hotspot network environment. 7. Confirm Ceiling Fan Power and Pairing: Confirm that the ceiling fan is powered on. Then, press and hold the WiFi button on the remote control for ten seconds until you hear a ticking sound. 8. Connect with Tuya Smart App: Open the Tuya Smart App, and the device should automatically appear. Click to connect.
Voice control	Connectionless	9. Verify Proper Device Connection and Functionality: Ensure that the device is correctly connected to the app and is functioning as expected. Make sure you are using a 2.4GHz WIFI network and have Bluetooth enabled. 10. Follow Voice Command Instructions: Follow the voice command instructions provided in the user manual. Note that only Alexa and Google are supported.
Installation	Blades installation	11. Secure Screws Properly: Initially, secure some of the screws, but avoid over-tightening. Then, tighten the remaining screws, and finally, secure the pre-locked one.
	Canopy installation	12. Adjust Canopy Fit: If the canopy doesn't fit, it may be due to the receiver or wires not being fully seated in the hanger bracket or on either side of the hanger. In this case, you will need to separate the wires toward the left and right sides to ensure the receiver is fully seated in the bracket.

FAN STRUCTURE DRAWING:

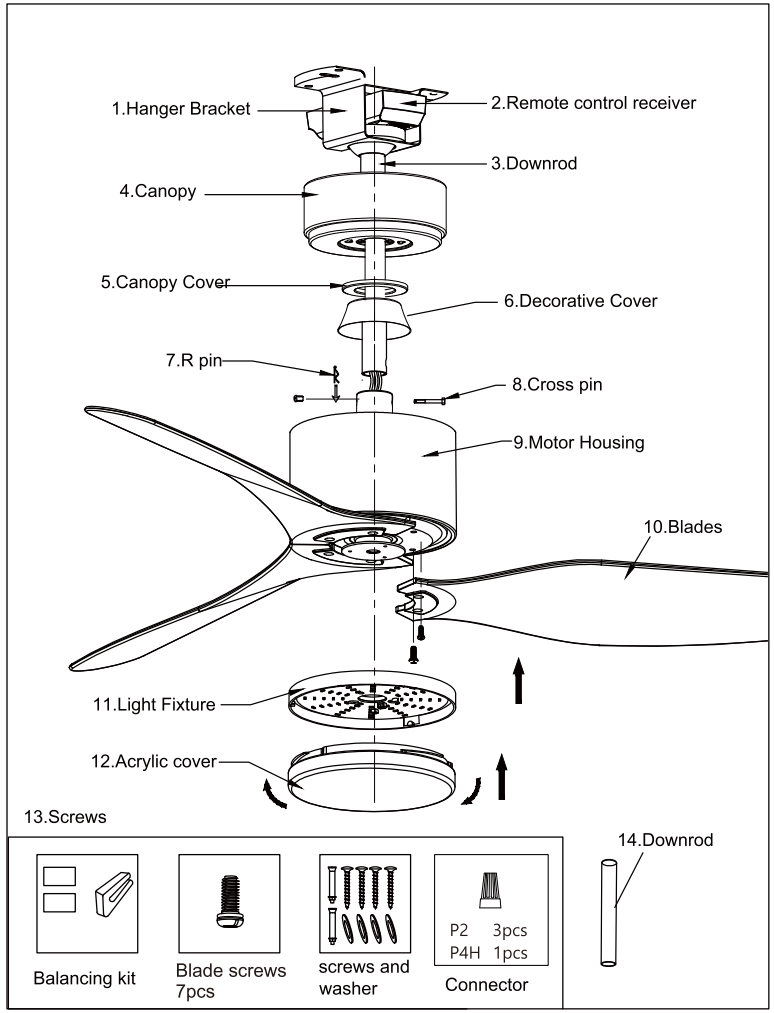

TOOLS THAT MAY BE USED DURING INSTALLATION :

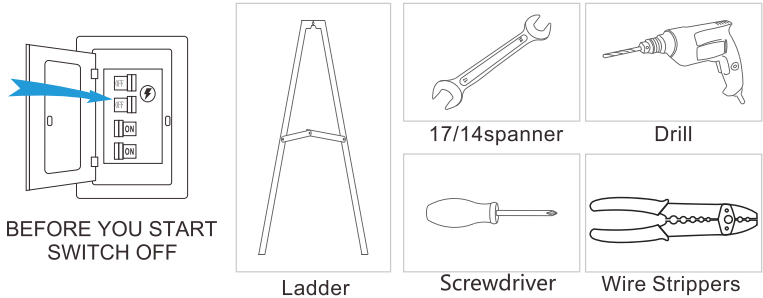

1. INSTALLATION OF HANGER BRACKET:

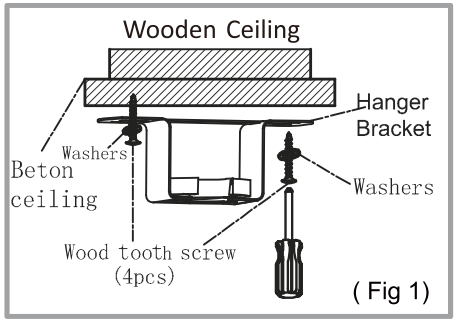

(Fig 1)

HARDWARE USED

Plain washer 4pcs

M5*25wood tooth screw 4pcs

Wooden Ceiling:
fasten the hanger bracket to the ceiling with 4 wood tooth screws.

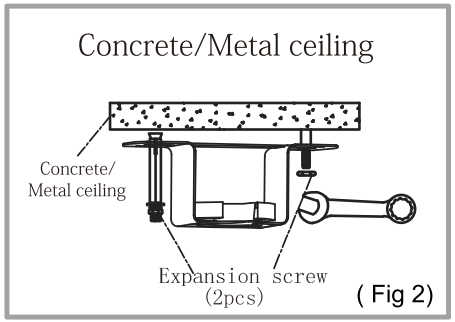

(Fig 2)

HARDWARE USED

M8*70 expansion screws 2pcs

Concrete/Metal ceiling:
Use the expansion screw to fix the hanger bracket to the ceiling.

Note: Ceiling fan should be installed on hard ceiling (wood ceiling, metal ceiling, concrete ceiling), which withstands approximately 30 kilograms of force.

Hole distance of hanger bracket for wood ceiling is 117mm; hole distance of hanger bracket for metal ceiling/concrete ceiling is 93–117mm.

2. INSTALLATION OF FAN BLADES & LIGHTKIT

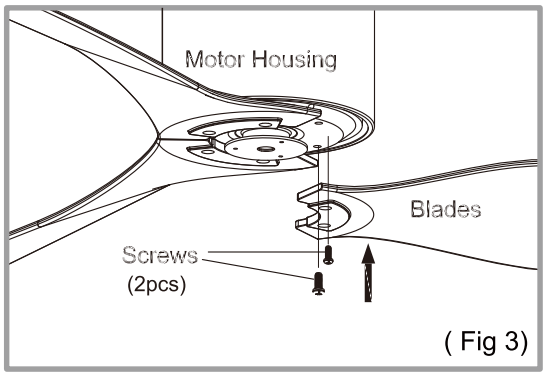

(Fig 3)

Attach blades to the motor. Align the holes of blade and motor. Using screws from hardware package and tighten each screw securely. (fig 3)

Alexa/Google assistant Connection Instruction & Voice Command

Connection Instruction

1. Make sure you have connected the device to the app and working normally.
2. Open “Tuya” app, click “Me”, and choose “Alexa” or “Google Assistant” on “Third-Party Services”.
3. Click “Link to Amazon Alexa” / “Link to Google Assistant”.

Note:

(1) Connect the device to the App recommend to turn on WIFI and Bluetooth on your phone.
(2) This ceiling fan needs to use 2.4Ghz WIFI to work when you connecting the device.

Common Voice Command:

Tips: 1. Please use in English
2. Please name the lamp and the fan differently.
3. Please say the voice command clearly and slowly.

Alexa Command:

Light Switch	“Alexa, turn on <Device Name-1> light” “Alexa, turn off <Device Name-1> light”
Color Temperature Setting	“Alexa, set/make the < Device Name-1 > light warmer/cooler/softer/whiter” “Alexa, set/make the < Device Name-1 > light to warm white / soft white /white / daylight white / cool white."
Brightness Setting	“Alexa, set/make the < Device Name-1 > light to 50% brightness." (1-100% any number) “Alexa, brighten < Device Name-1 > light.” “Alexa, dim < Device Name-1 > light."
Fan Power	“Alexa, turn on <Device Name-2> fan” "Alexa, turn off <Device Name-2> fan"
Wind Speed Level Setting	“Alexa, set the < Device Name-2 > fan to (1-100 any number)” "Alexa, set the fan speed on the < Device Name-2 > to maximum / minimum. “Alexa, what's the < Device Name-2> fan speed?"
Forward/ Reverse	“Alexa, set/change/turn the < Device Name-2 > direction to summer / winter."

Google Command:

Light Switch	“Hey Google/Ok Google, turn on <Device Name-1> light” “Hey Google/Ok Google, turn off <Device Name-1> light”
Color Temperature Setting	“Hey Google / Ok Google, set/change the <Device Name-1> light to warm white (CCT 0) /cool white (CCT 50) / cool daylight(CCT 75) / daylight(CCT 100)”
Brightness Setting	“Hey Google / Ok Google, set < Device Name-1> light to 50% brightness.(1-100% any number) “Hey Google / Ok Google, set <Device Name-1> light brightness to 100%.”(1-100% any number) “Hey Google / Ok Google, brighten < Device Name-1> light.” “Hey Google / Ok Google, dim < Device Name-1>light.” "Hey Google / Ok Google, what is the brightness of < Device Name-1> light”
Fan Power	“Hey Google / Ok Google, turn on <Device Name-2> fan” "Hey Google / Ok Google, turn off <Device Name-2> fan"
Wind Speed Level Setting	“Hey Google / Ok Google, set < Device Name-2> fan speed to 50 (1-100 any number).” “Hey Google / Ok Google, what's the < Device Name-2> fan speed?
Forward/ Reverse	“Hey Google / Ok Google, set/change the < Device Name-2 > fan to forward / reverse” “Hey Google / Ok Google, set/change the <Device Name-2> fan to summer/ winter"

APP CONTROL MANUAL

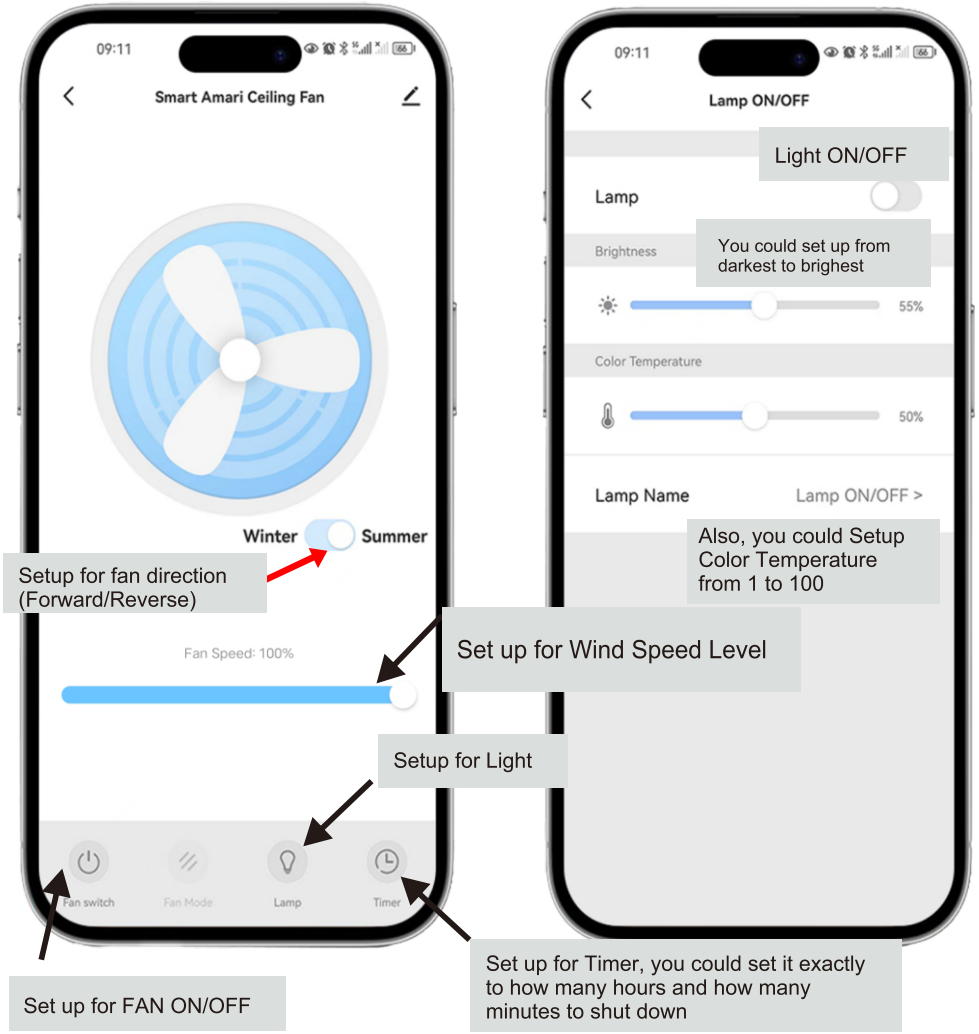

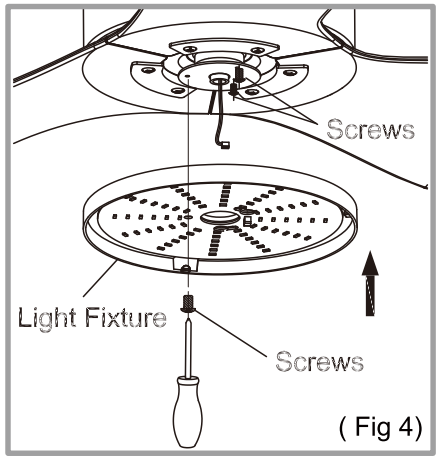

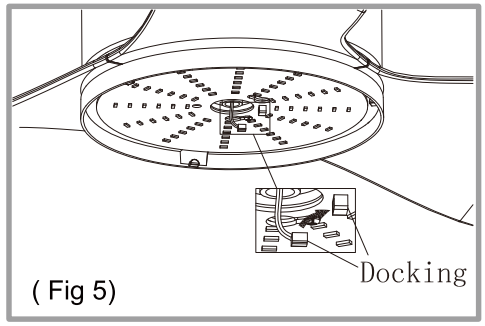

1) Remove three screw from the motor round piece. (Fig 4)

2) Fix the light kit with the 3 screws. (Fig 4)

3) Connect the motor line to the panel line. (Fig 5)

3.INSTALLATION OF DOWNROD / HANGER BALL:

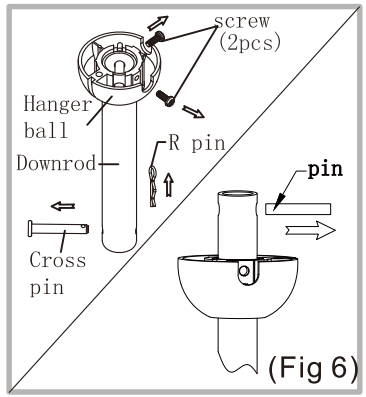

1.Remove the screw and pin from the hanger ball;Remove the "R" pin and and cross pin from the downrod. (Fig 6)

2. Select a suitable downrod, put the canopy, canopy cover, and decorative cover through the downrod, then put the wire through the downrod. (Fig 7)

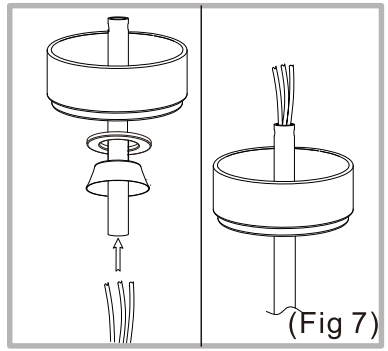

3. INSTALLATION OF DOWNROD / HANGER BALL:

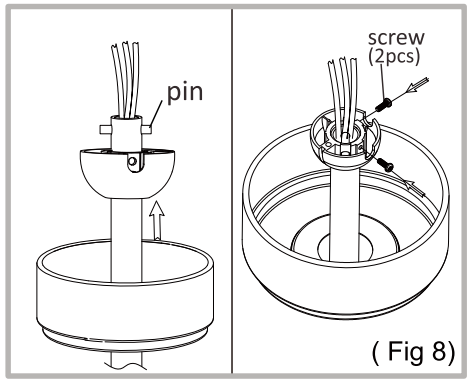

(Fig 8)

3.Reinstall the screws and pin onto the hanger ball, ensuring they are tightened securely.
(Fig 8)

Note: Place the wires to either side to avoid causing blocking of the pins.

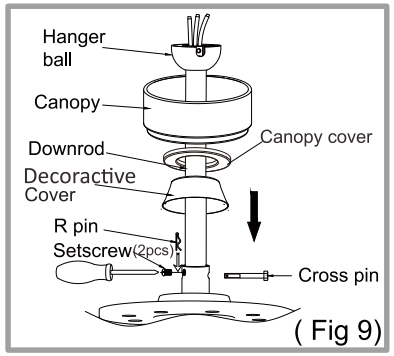

(Fig 9)

4. Loosen the two setscrews in the download support, and lock The cross pin with the "R" pin, and tighten back the two screws. (Note: The wire might block the cross pin slightly)

The "R" pin must be properly installed to prevent the cross pin from working loose.
(Fig 9)

Note: There are two pins here, so be careful not to install them backwards. The longer one is cross pin, the shorter one is pin.

4. HANGING OF CEILING FAN:

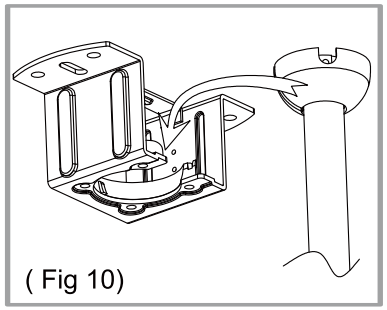
(Fig 10)

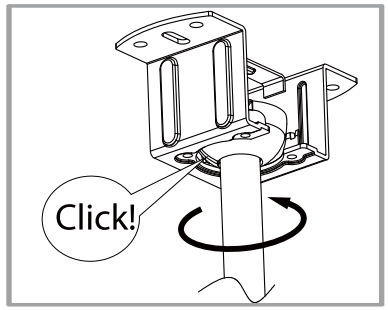

Lift the assembled fan onto the hanger bracket. Ensure the concave groove of the hanger ball is positioned on the hanger lug of the hanger bracket.

ADD MANUALLY (WIFI ON & BLUETOOTH OFF)

1. Open “TUYA” smart APP and then Click "Add device" on the APP Page
2. Then Under "Add Manually" SELECT "Small Home Appliances"
3. Then Select "Fan(WI-FI)" (Fig 4) and Type in your WIFI code & password (Fig 5)
4. Turn on the Fan power within 30 seconds, Press the "2H" key on the remote for at least 5 seconds.
5. Then Click "Confirm the indicator is blinking" on the APP page and then Select "Blink Quickly".
6. Waiting for connection and Clicking "Done" on the APP page.
   (Note: if the ceiling fan is not searched, please make sure the 2.4 Ghz WIFI & Bluetooth are on and the network is stable; if the ceiling fan is disconnected within 3 mins please retry to pair the fan by repeating step 1.
7. Then the following page shown (Fig 6) you could operate normally with the page.

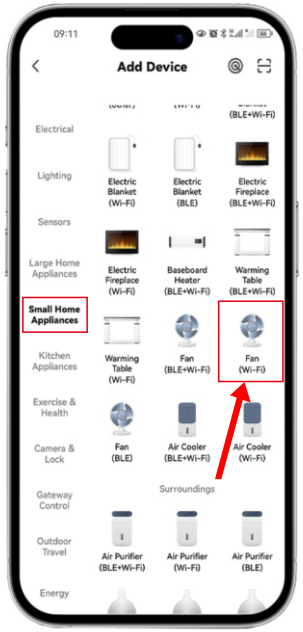

(Fig 4)

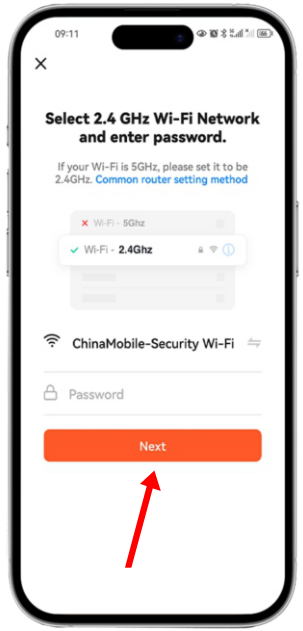

(Fig 5)

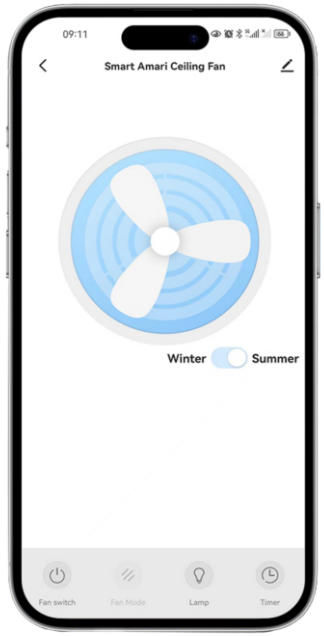

(Fig 6)

SMART APP CONNECTION INSTRUCTION

Scan the QR code and download "*TUYA" smart APP.*
(The ceiling fan needs work at 2.4 GHz WIFI to connect the device)
[If you have any question, please refer to more detail about our APP & CEILING FAN CONNECTION INSTRUCTION]

ADD automatically (WIFI & BLUETOOTH both on) --RECOMMENDED

1. Open *TUYA smart APP* & Turn on the Fan power supply within 30 seconds, Press the button of "2H" on the remote for at least 5 seconds until hearing 2 or more beep sounds.
2. Then Click "Add device"(Fig 1) on the APP Page.
3. Then click "Add" (Fig 2) and wait for the connection(Fig 2) (Note: if the ceiling fan is not searched, please make sure the 2.4 Ghz WIFI & Bluetooth are on and the network is stable; if the ceiling fan is disconnected within 3 mins please retry to pair the fan by repeating step 1.)
4. After connecting successfully, then click "next".
5. After that, then click "Finish" to enter the interface.
6. Then the following page is shown (Fig 3) you could operate normally with the page.

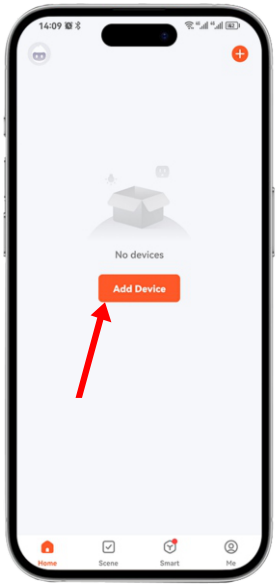

(Fig 1)

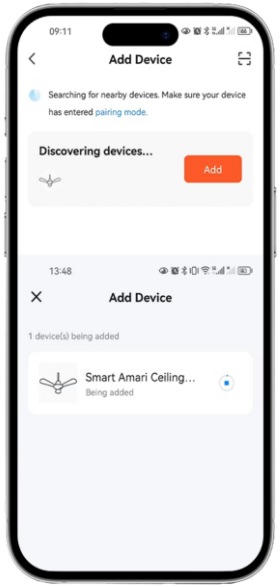

(Fig 2)

(Fig 3)

5. WIRING OF CEILING FAN :

Total six colors of wires connected from the top of the motor:

* Black, White, Yellow wires - for light kit
* Gray, Red, Yellow wires - live wire for fan
  Motor ground, downrod ground, receiver ground,hanger ground
* Green/Yellow - ground wire

The installation is to be in accordance with the National Electrical Code ANSI/NFPA 70 and local codes.

HARDWARE USED

wire connectors
P2 3pcs
P4H 1pcs

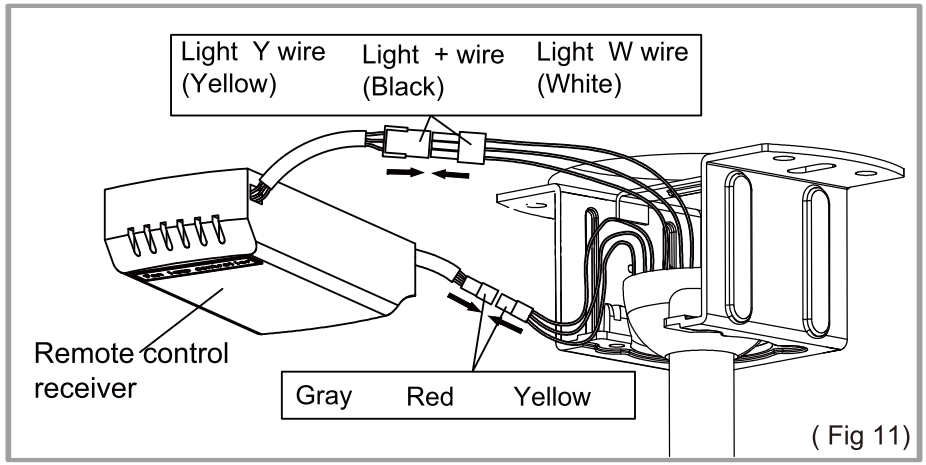

(Fig 11)

1) Connect the ceiling fan cord to the receiver.

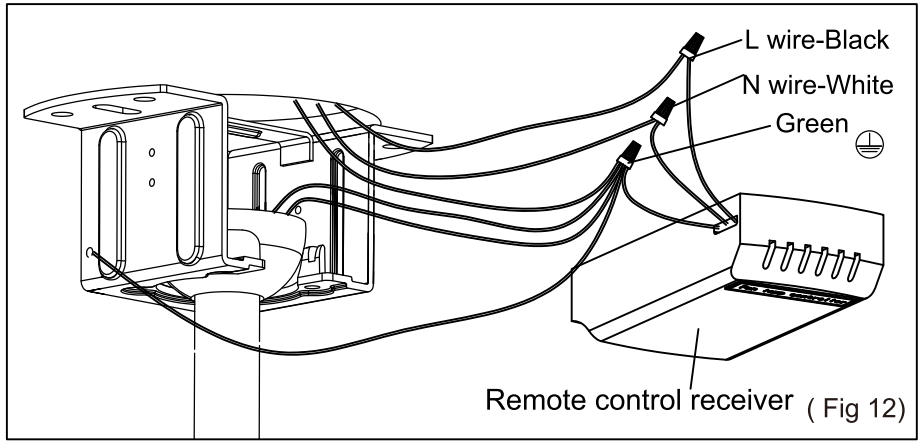

(Fig 12)

2) Connect the wires of remote control receiver to AC wires (Household supply):
Green to Ground, White to Neutral, Black to Live.

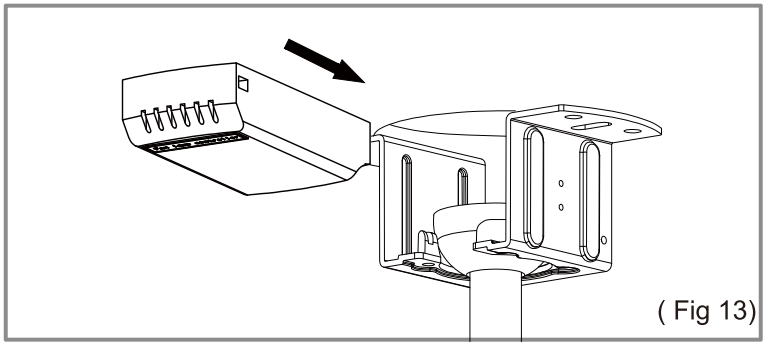

3) Organize the wires and place the receiver into the hanger bracket.

6. INSTALLATIONS OF CANOPY & LIGHTCOVER:

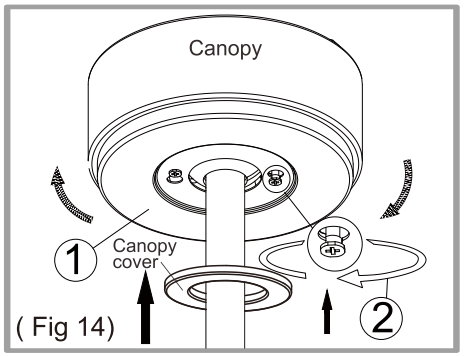

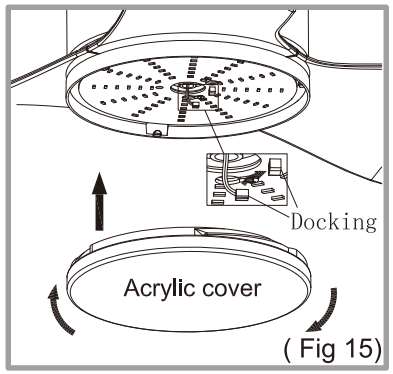

1) Please rotate all the wires around the hanger bracket in the same direction to tuck all wires into the canopy. Then, rotate the canopy and tighten the screws into two right holes. (Fig 14)

2) Attach the canopy cover with magnet to the canopy. (Fig 14)

3) Rotate the light cover until fixed. (Fig 15)

If the receiver won't fit in the hanger bracket, you can loosen the screws and tighten them again after the receiver is in the hanger bracket.

REMOTE CONTROL MANUAL (BUTTON FUNCTION):

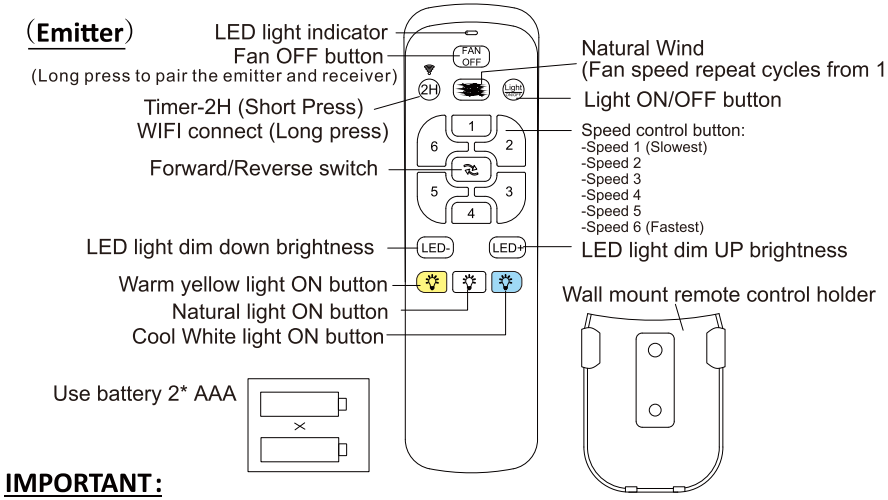

IMPORTANT:

The remote control transmitter and receiver have factory pre-set/paired and ready to be used immediately. If require to re-pairing the transmitter and receiver, follow below instruction:

1. Turn the ceiling fan main switch power Off for 10 seconds.
2. Turn the ceiling fan main switch power on, and will hear a Beep sound then within 3 seconds press and hold the 'FAN OFF' button.
3. Wait for the receiver to emit a beep sound, then release the button. The pairing process is complete.
4. If the pairing process un-successfully, then repeat step 1 to step 3.(Note: Ensure the batteries have enough power)

NOTE: After pressing the timer(2H) button, if any other button is pressed, the timer function will be cleared. Do not press any buttons after setting the timer function.

5. If the emitter cannot control the receiver, check if there are any similar remote controlled products nearby and see if they are working. Remote controlled products with the same frequency can interfere with each other.
6. Low battery voltage will affect the sensitivity of the emitter and the signal reception. The indicated light will dim when the battery voltage is low. Replace the battery if it is low.
7. Remove the battery from the emitter if it will not be used for a long time.
8. Refer to the "POWER PARAMETER LIST" above for the maximum load of the lighting. PS: Please connect the ground wire correctly to avoid micro-light or flashing of the light.
9. When installing the fan, make sure the fan ceiling cover does not press against the antenna (or other wires) as it can break the wire and cause a short circuit.