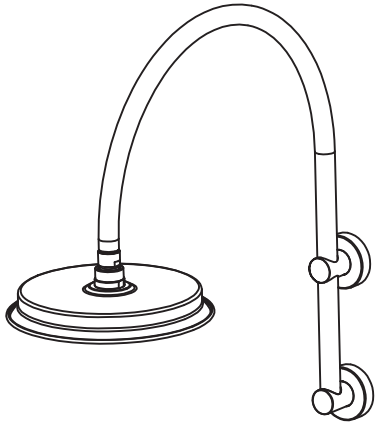

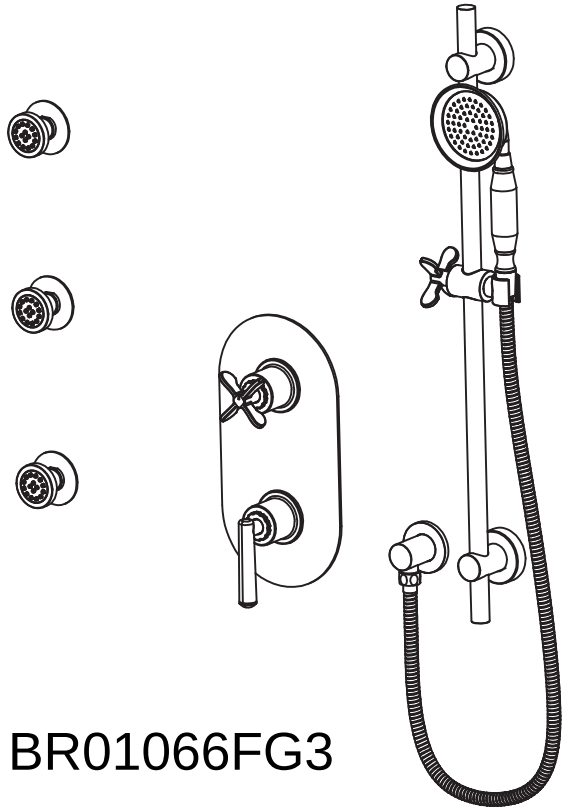

BR01066FG3

Customer Service
call our number:888-257-3857
Or E-mail:service@casainc.com

Installation Condition

1.Check the accessories list to verify that all parts are complete in this package.
2.Do not disassemble the shower valve body by yourself.
3.Connect inlet pipes to supply valves.
4.Make sure inlet pipes and supply valves have no impurities and are cleaned,with no impurities in the pipeline.
5.After installation.check all joints for leakages.
6.Do not leave the rain shower system exposed to a severely corrosive environment.

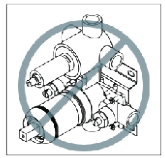

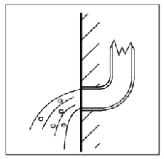

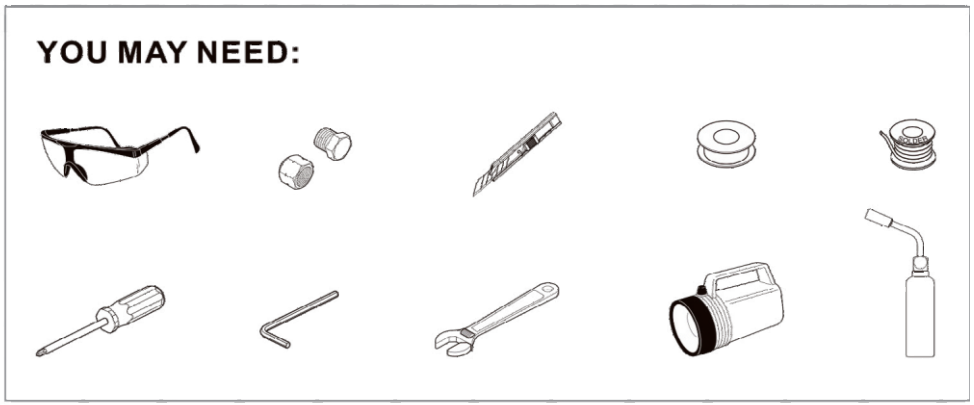

Essential dimensions & water pipe line

Unit:mm/inch

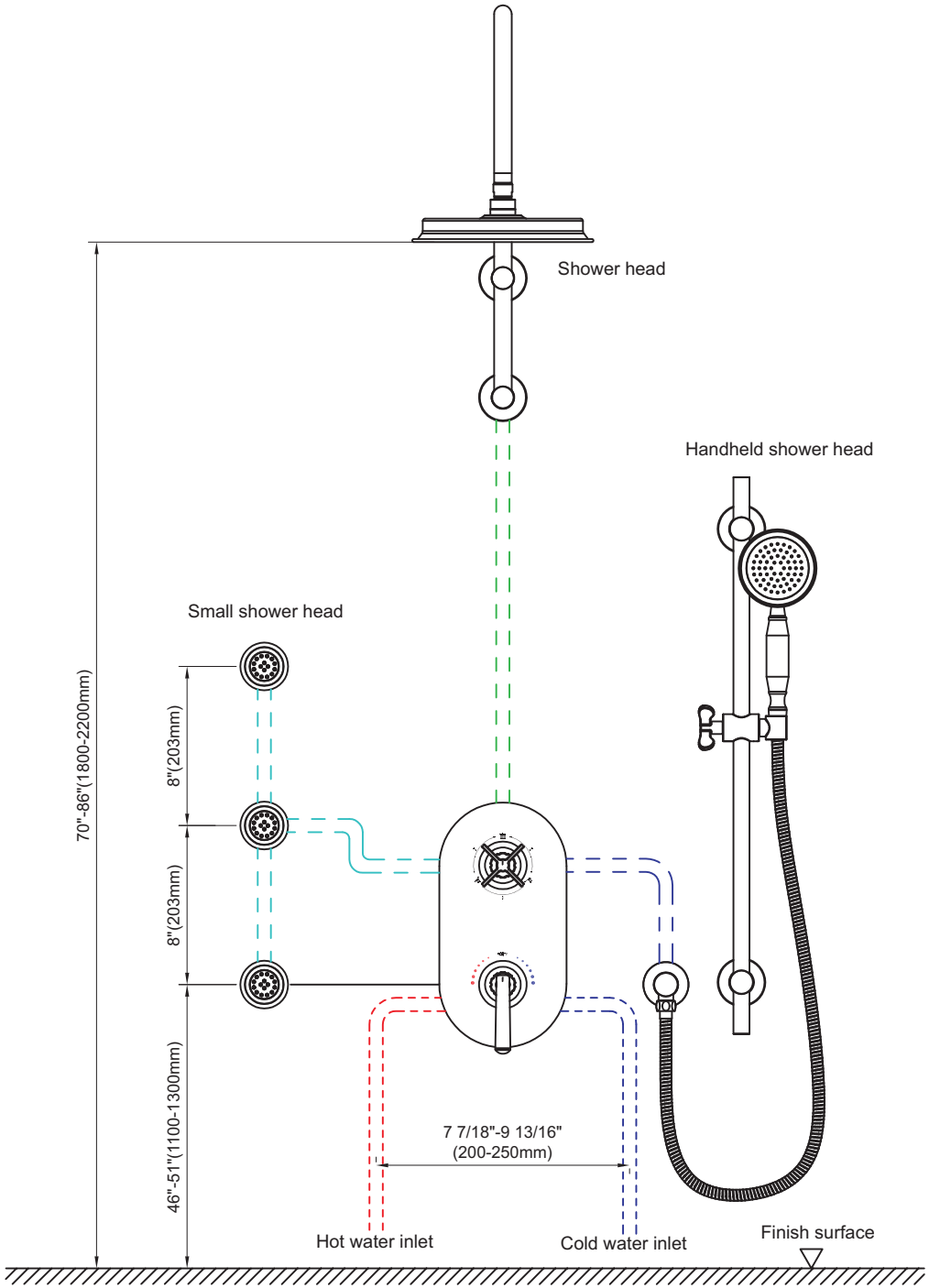

three-function Rain Shower System

Accessories List

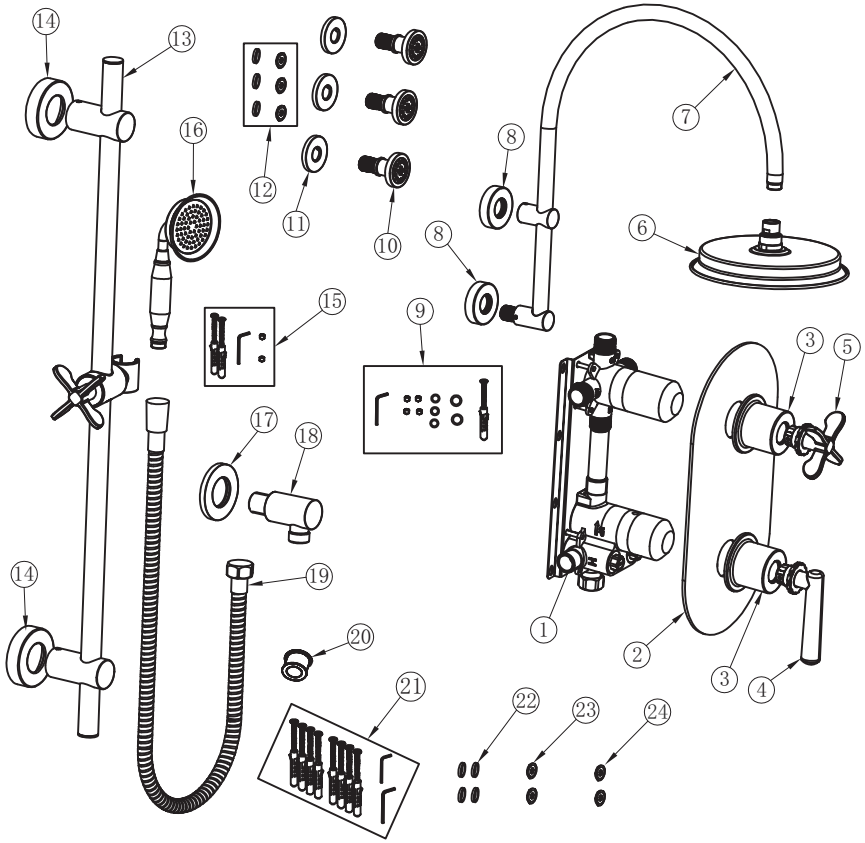

No.	Part name	Qty	No.	Part name	Qty
1	Three - function thermostatic main body	1	14	Decorative cup for lifting rod	2
2	Annular panel	1	15	Spare parts package for lifting rod	1
3	Decorative pressure sleeve for panel	2	16	Classic hand - held shower	1
4	Thermostatic handle	1	17	Decorative cup for connection	1
5	Cross water - distributing handle	1	18	Round shower connector	3
6	9" Classic top - spray shower	1	19	Stainless steel hose	3
7	Umbrella - shaped shower arm pipe	1	20	Sealing tape	1
8	Decorative cup for shower pipe	2	21	Main body spare parts package	1
9	Spare parts package for shower pipe	1	22	Gasket	4
10	2" Small side spray	3	23	2.5GPM water - saving sheet	2
11	Decorative sheet for small side spray	3	24	1.8 GPM water - saving sheet	2
12	0.5GPM accessory package for small side spray	1			
13	Lifting rod	1			

Installation Depth Of Shower Valve Body

Unit:mm/inch

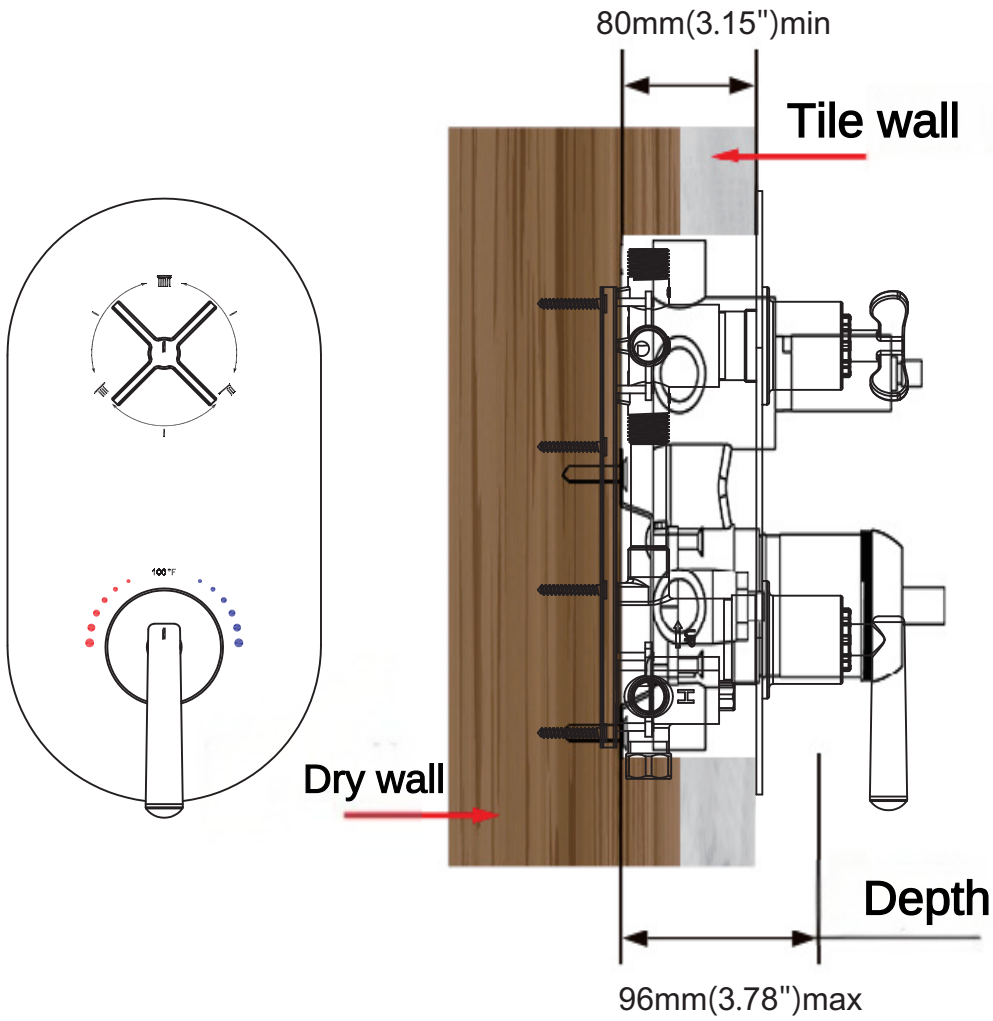

Notice:1. The installation depth of the shower valve body should be no less than 3.15"(80mm)and no more than 3.78"(96mm), including the thickness of the tile. Otherwise ,the trim plate cannot be installed.
2.The opening size of ceramic tile shall be smaller than the trim plate size.

Piping Instructiong Before Tiling

1.

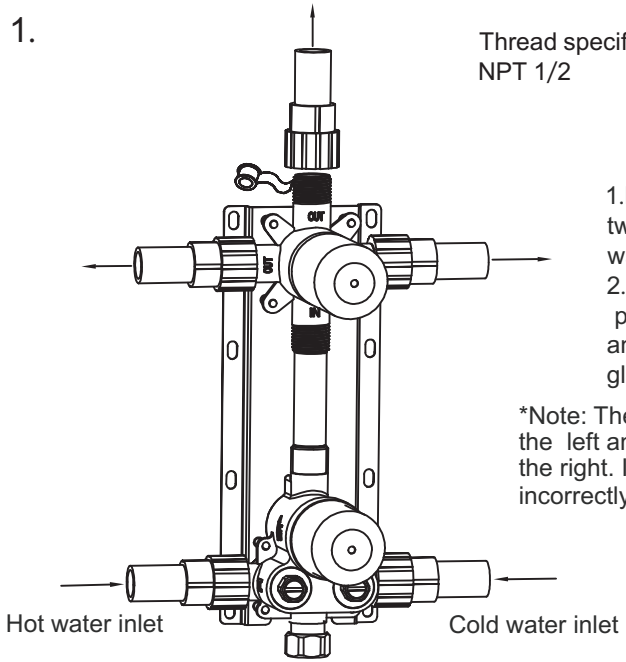

Thread specifications:
NPT 1/2

1.Rinse thes ediment inside the two inlet pipes with pre flushing water.
2.Connect the inlet and outlet pipes as shown in the diagram, and wrap the joint with sealing glue at the and outlet.

*Note: The hot water inlet pipe is on the left and the cold water inlet pipe is on the right. It must not be connected incorrectly, otherwise the function will fail.

2.

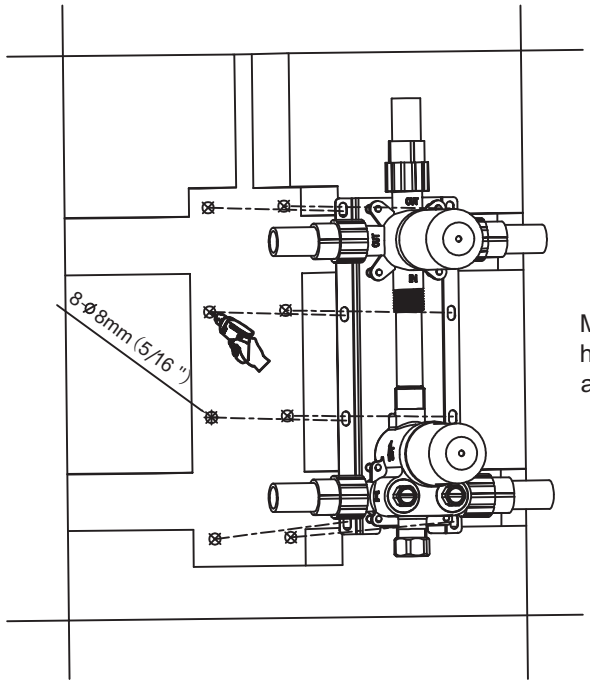

Marking the holes, and drill holes at the markings with an 8mm(5/16")drill bit.

3.

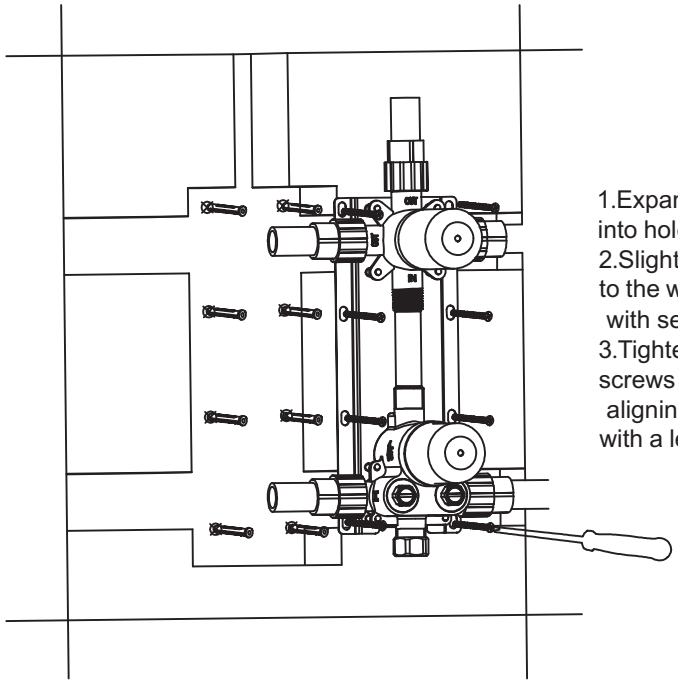

1.Expansion hose plugged into hole;
2.Slightly fix the main body to the wall with self-tapping screws;
3.Tighten the self-tapping screws after aligning the mounting box with a level.

4.

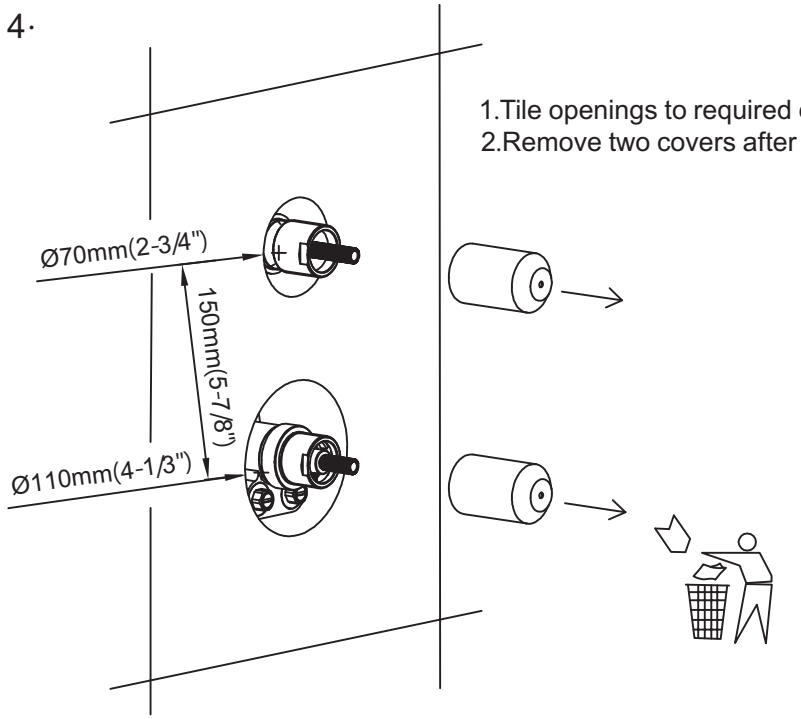

1.Tile openings to required dimensions;
2.Remove two covers after tiling the walls.

5.

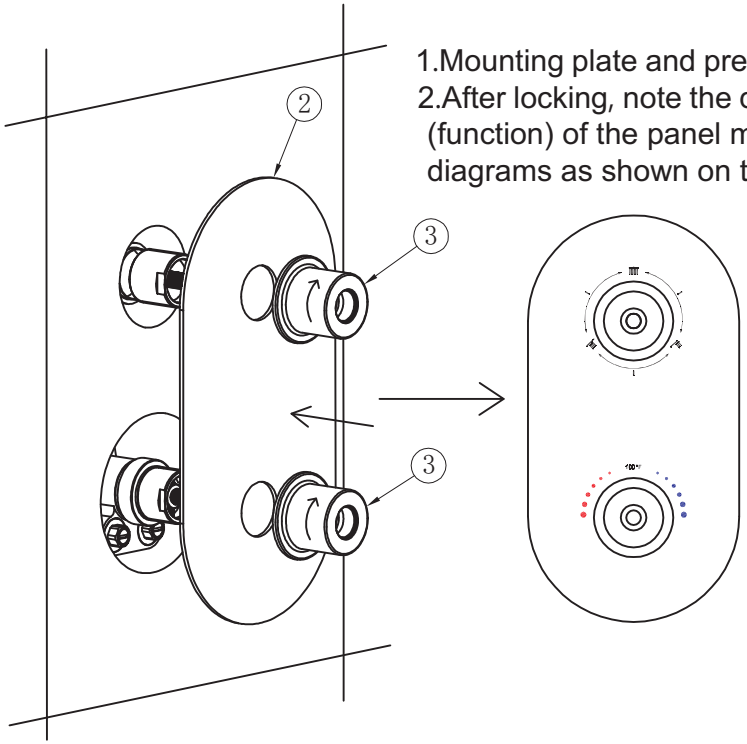

1.Mounting plate and pressure sleeve;
2.After locking, note the direction (function) of the panel marking diagrams as shown on the right.

6.Handle mounting

Ensure that the marking line of thediverter valve core rod and themarking of the cross handle arevertically upward.

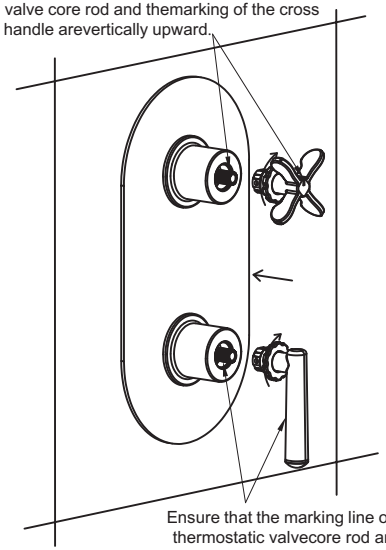

Ensure that the marking line of the thermostatic valvecore rod and the handle rod are vertically downward.

1.Align marking lines as shown;
2.Pun on two handles;
3.Locking nut on handle.

Precautions for Handwheel Installation

※1.The line can't be misplaced; it should be kept in line. Otherwise, the water temperature of 100°F or 38°C will not be correct.

※2. Please ensure that the plastic locating ring (A) and handwheel locating pin (B) are kept in the same line with 100°F or 38°C. Otherwise, the water temperature will be incorrect.

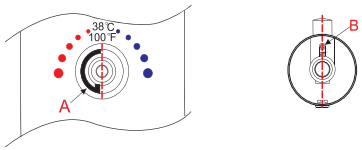

7.Adjust handle position to control flowing pattern.

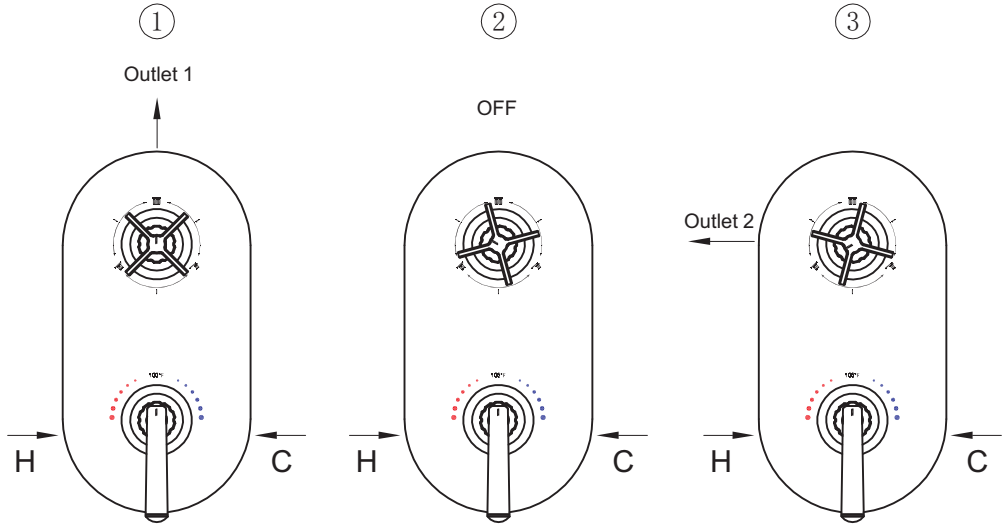

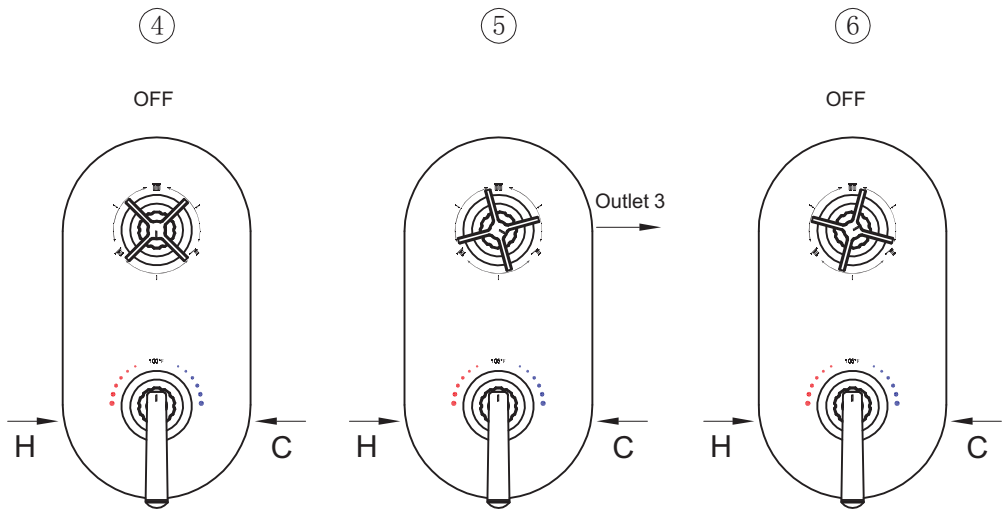

8.

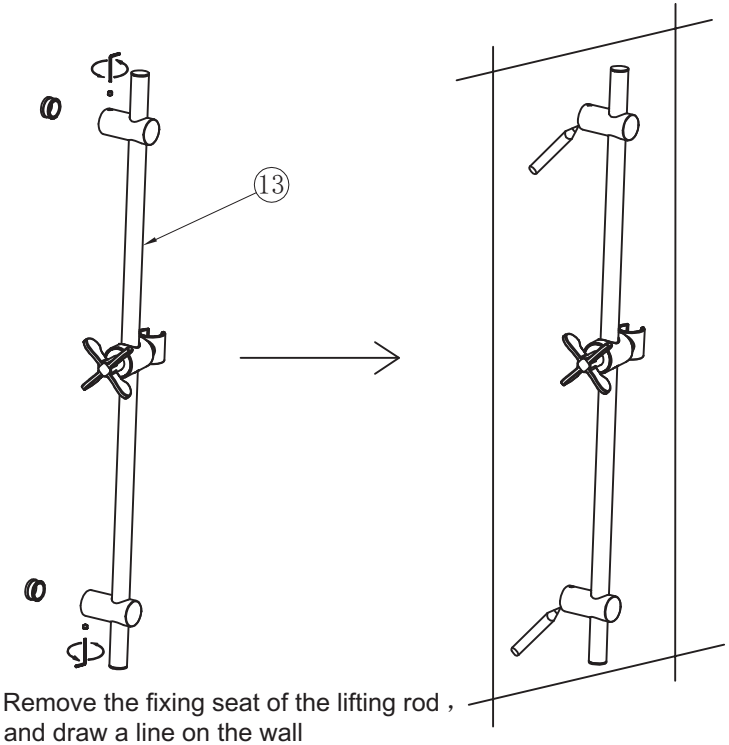

Remove the fixing seat of the lifting rod，
and draw a line on the wall

10.

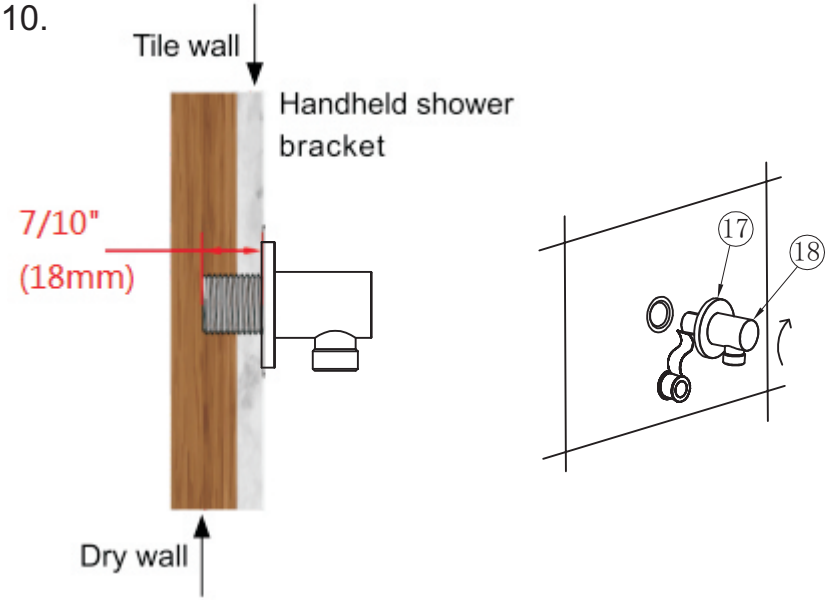

The thickness of the tile must be calculated for installation.
Connector size of male thread:USA:1/2"-14NPT.Canada:1/2"-14NPT

9.

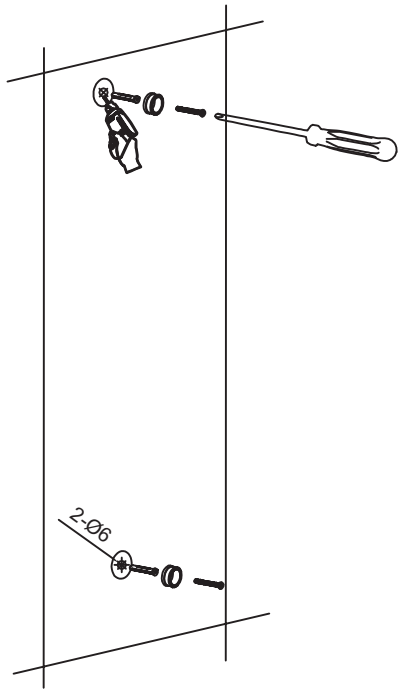

Drill holes in the center of the
central wall and lock the fixing seat.

10.

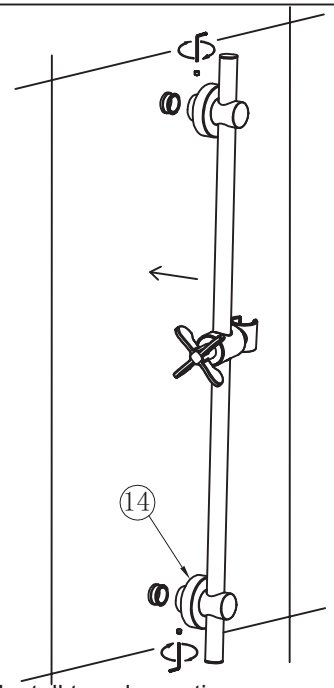

Install two decorative cups on
the lifting rod, fix them on the
wall, and tighten the screws.

11.

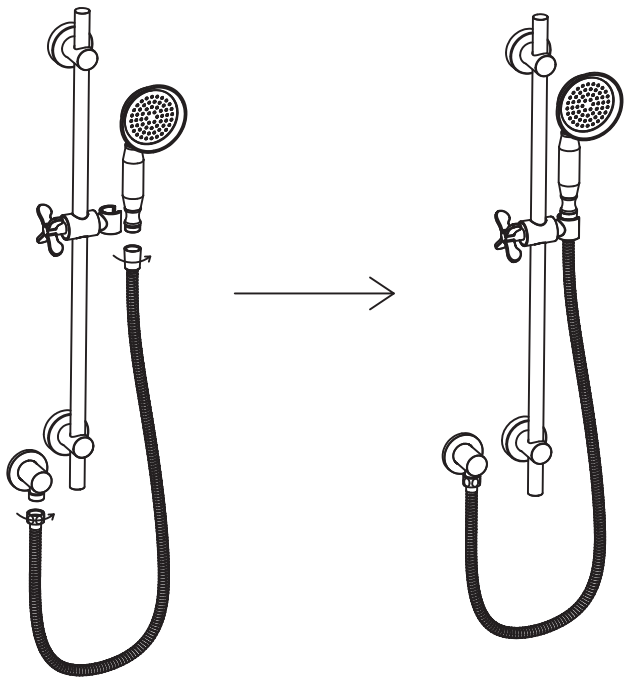

12.

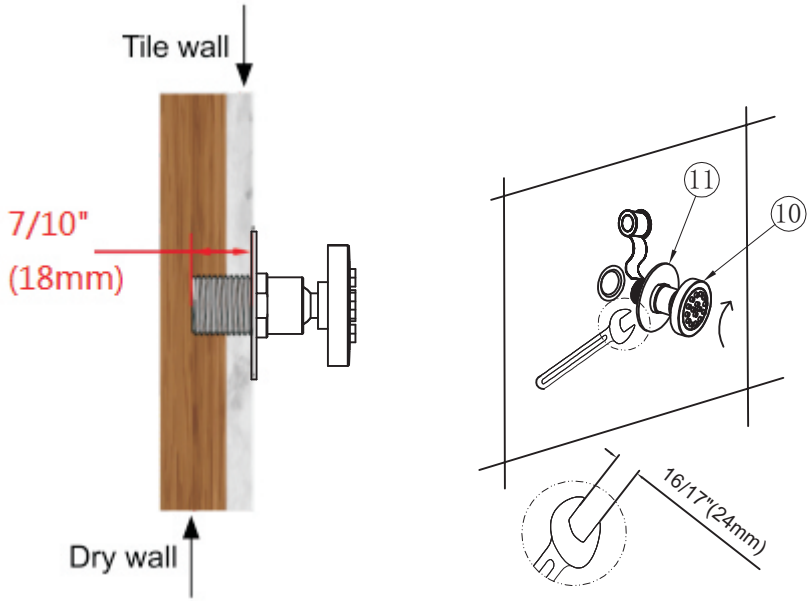

The thickness of the tile must be calculated for installation.
Connector size of male thread:USA:1/2"-14NPT.Canada:1/2"-14NPT

13. Three side sprays are installed.

14.

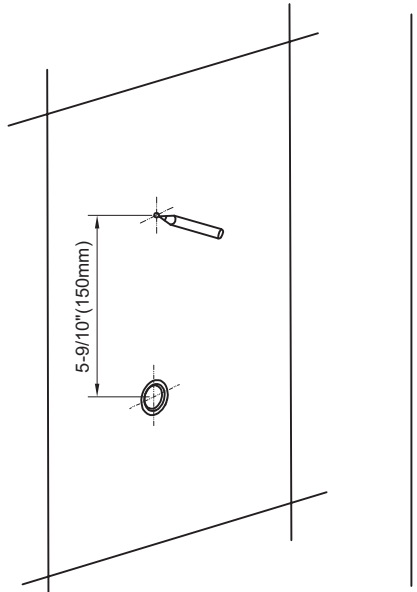

Use a level to mark points as shown in the figure to ensure perpendicularity to the water inlet hole.

15.

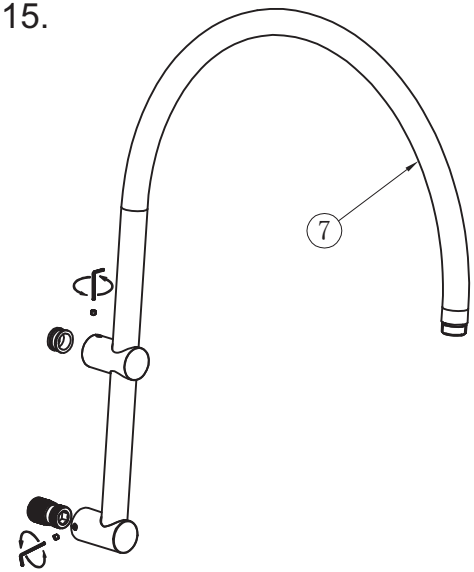

Remove the water inlet joint and fixed wall bracket on the shower pipe.

16. Install the water inlet joint and fixed base as required with a 10mm hex wrench.

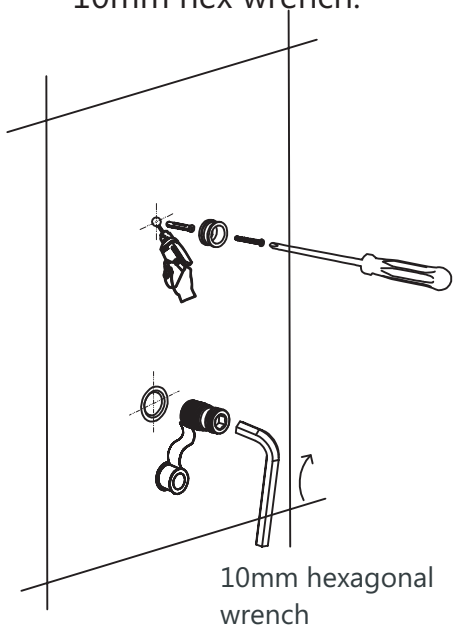

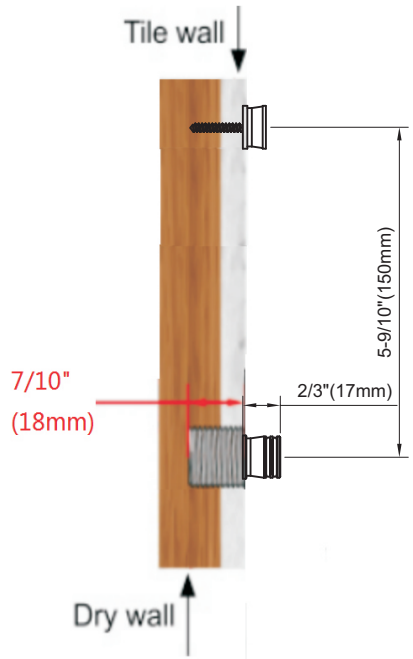

17.

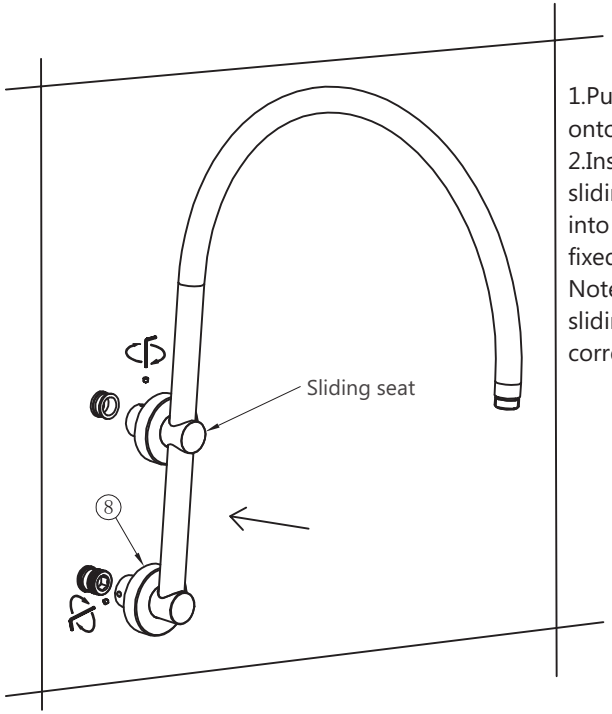

1.Put the two decorative cups ⑧ onto the shower pipe.
2.Insert the water inlet seat and the sliding seat hole on the shower pipe into the water inlet joint and the fixed seat on the wall and lock them.
Note: If not aligned properly, the sliding seat can be adjusted for correction.

18.

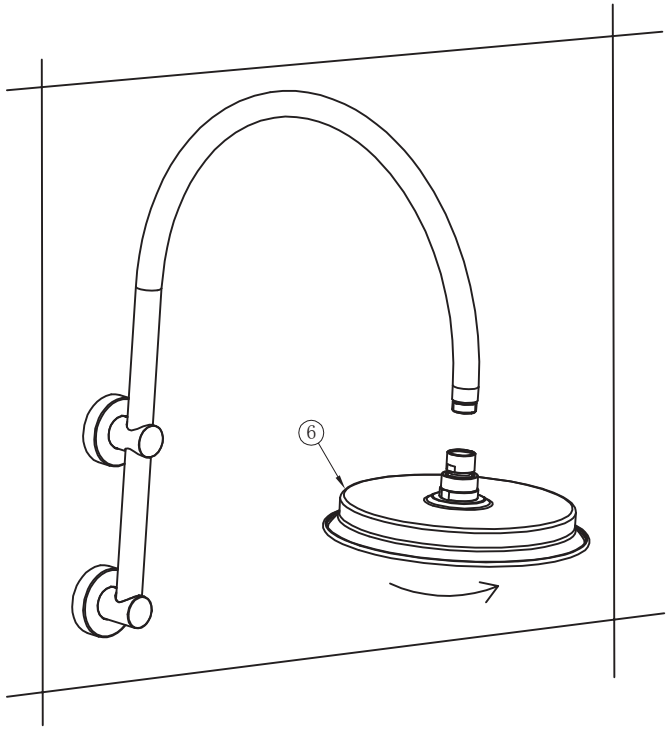

19. Finished

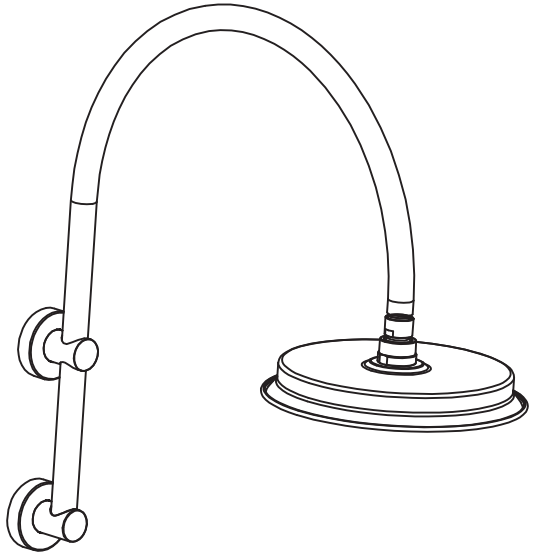

Do's

1.In order to keep the mixer surface bright.please clean the mixer regularly.
2.Rinse the faucet with clean water and wipe it with a soft cotton cloth.
3.Use one of the following cleaners to remove dirt from the surface:
a.Mild liquid cleaner.
b.Colorless glass cleaner and powder cleaner that do not cause abrasion and can be dissolved completely.
c.Polish liquid that does not cause abrasion.

Don'ts

a. Avoid using cleaning powder,harsh cleaning chemicals,brushes and coarse cloth to prevent scratching and friction.
b. Do not use acid cleaners to clean the faucet as they may cause surface corrosion of the faucet.If the faucet is exposed to harmful acid substances.please rinse it immediately with water.