If there are any missing parts or quality problems, please contact me via email: **yfochair@outlook.com**

PATRS

A x1	B x1	C x2	D x1	E x1
F x5	G x5	H x1	I x10 M6*16 +1(spare)	J x4 M6*20 +1(spare)

K x8 M8*25 +1(spare)	L x1 M6	M x8

01

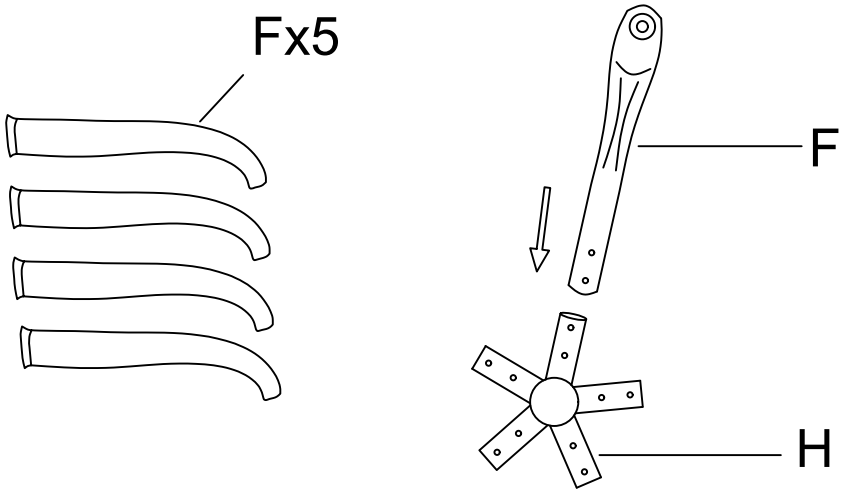

If there are any missing parts or quality problems, please contact me via email: **yfochair@outlook.com**

02

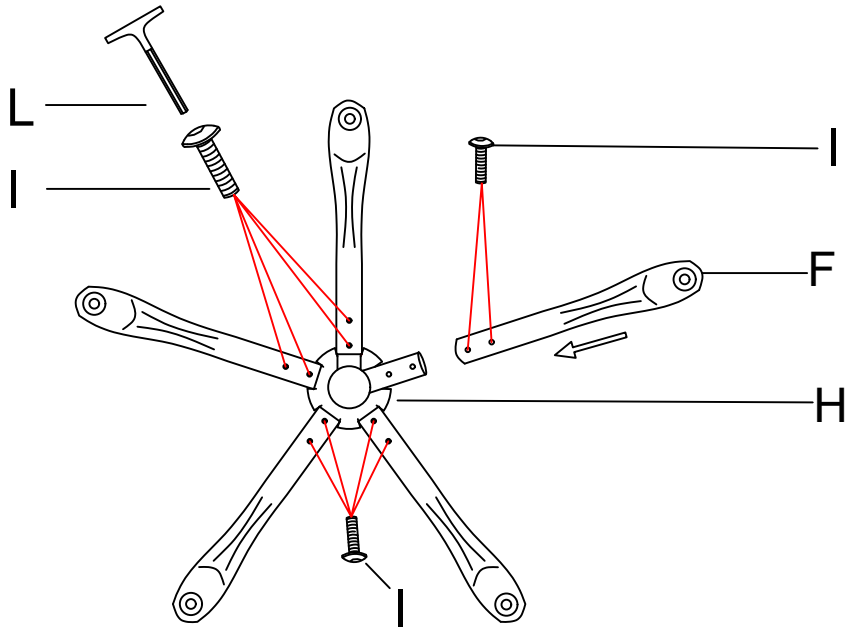

03

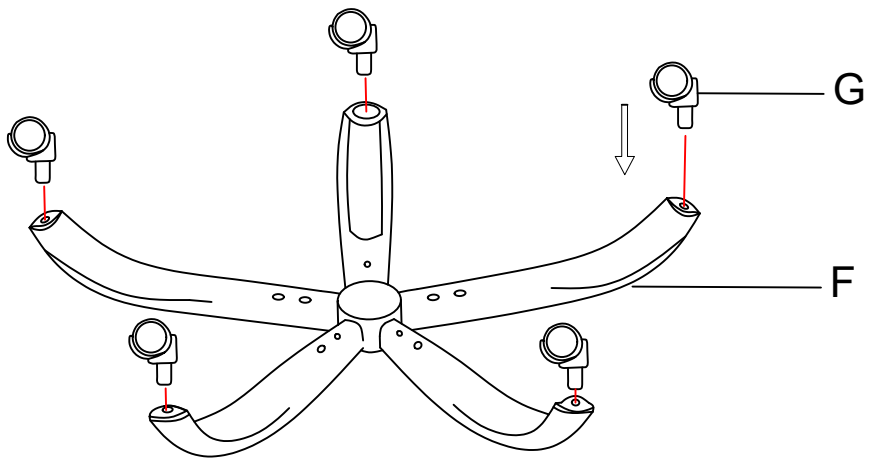

If there are any missing parts or quality problems, please contact me via email: **yfochair@outlook.com**

04

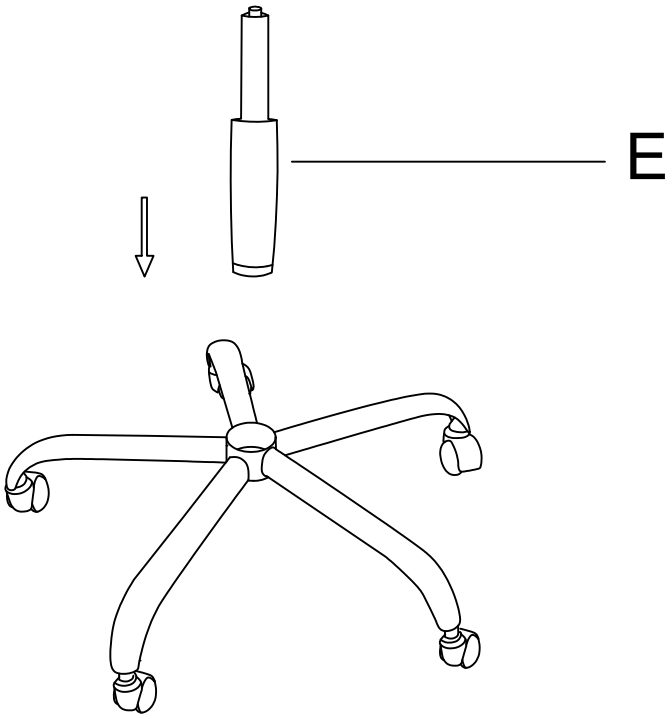

05

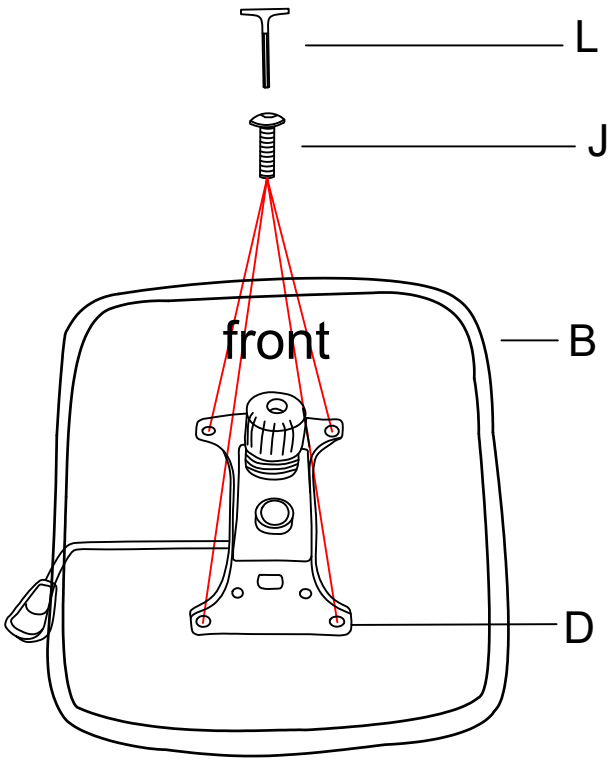

If there are any missing parts or quality problems, please contact me via email: **yfochair@outlook.com**

06

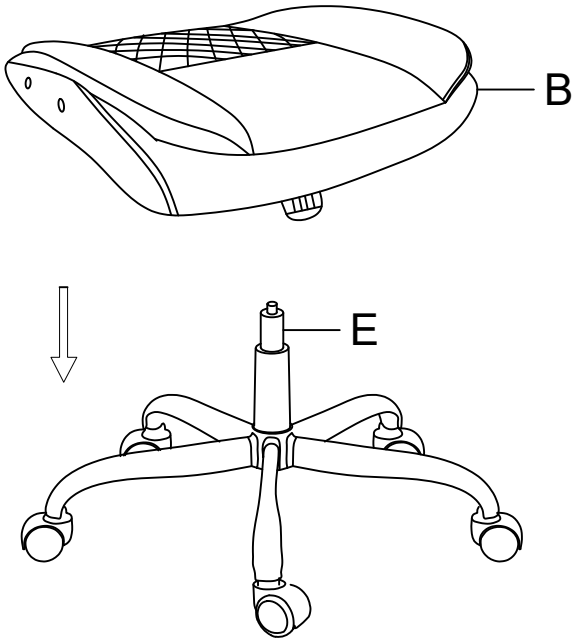

07

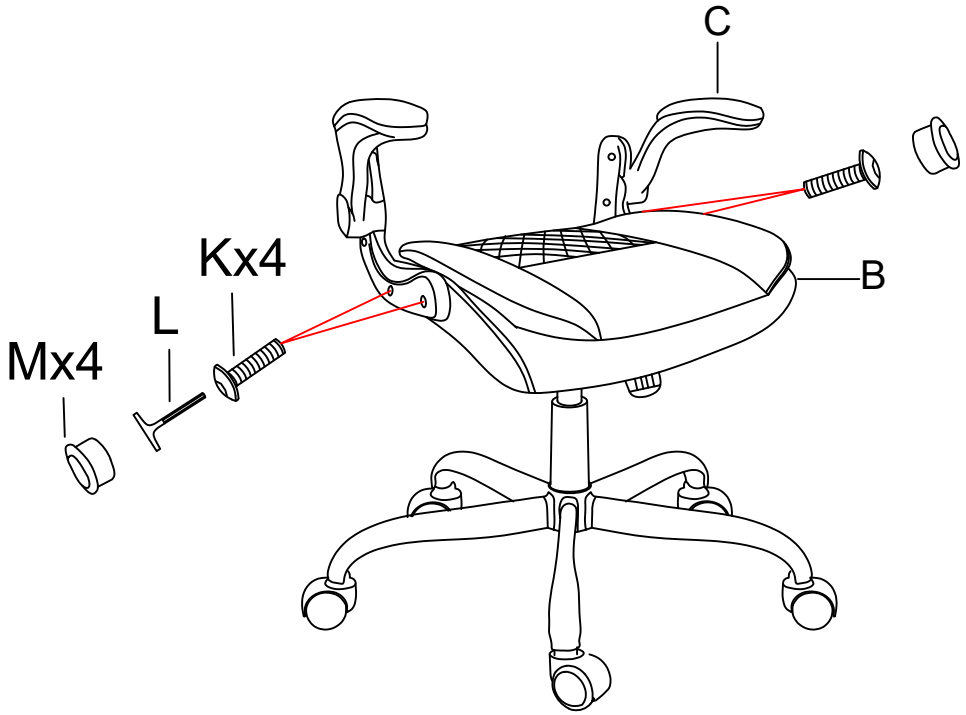

If there are any missing parts or quality problems, please contact me via email: **yfochair@outlook.com**

08

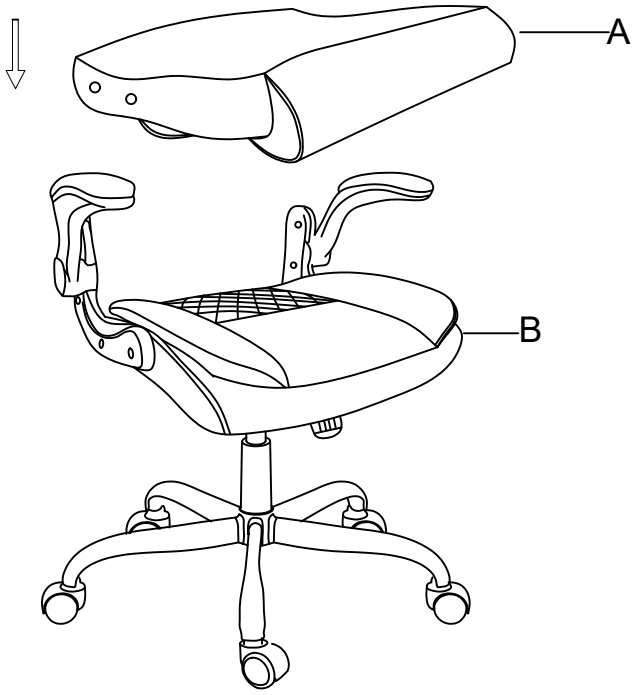

09

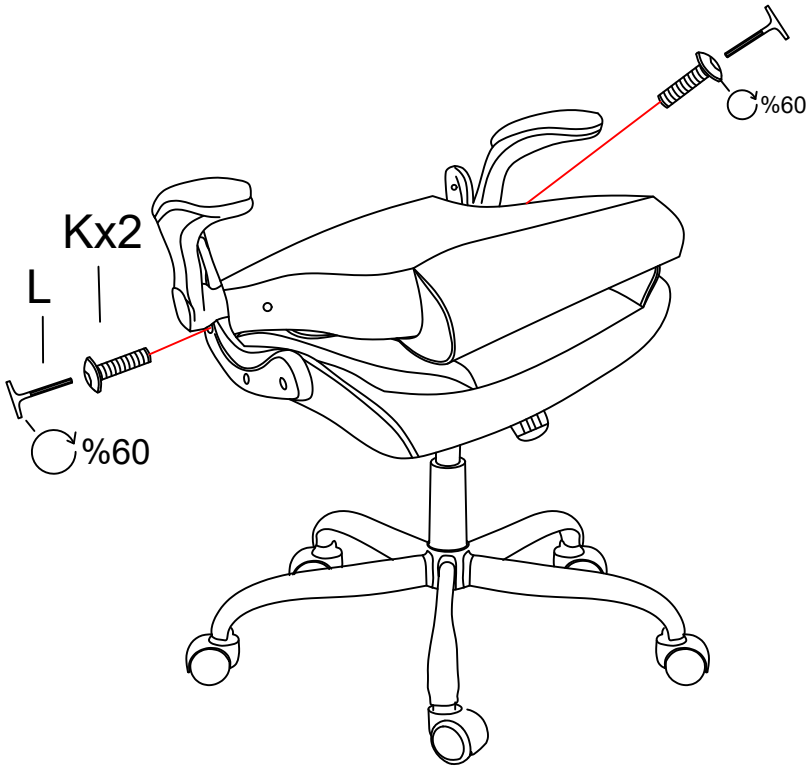

If there are any missing parts or quality problems, please contact me via email: **yfochair@outlook.com**

10

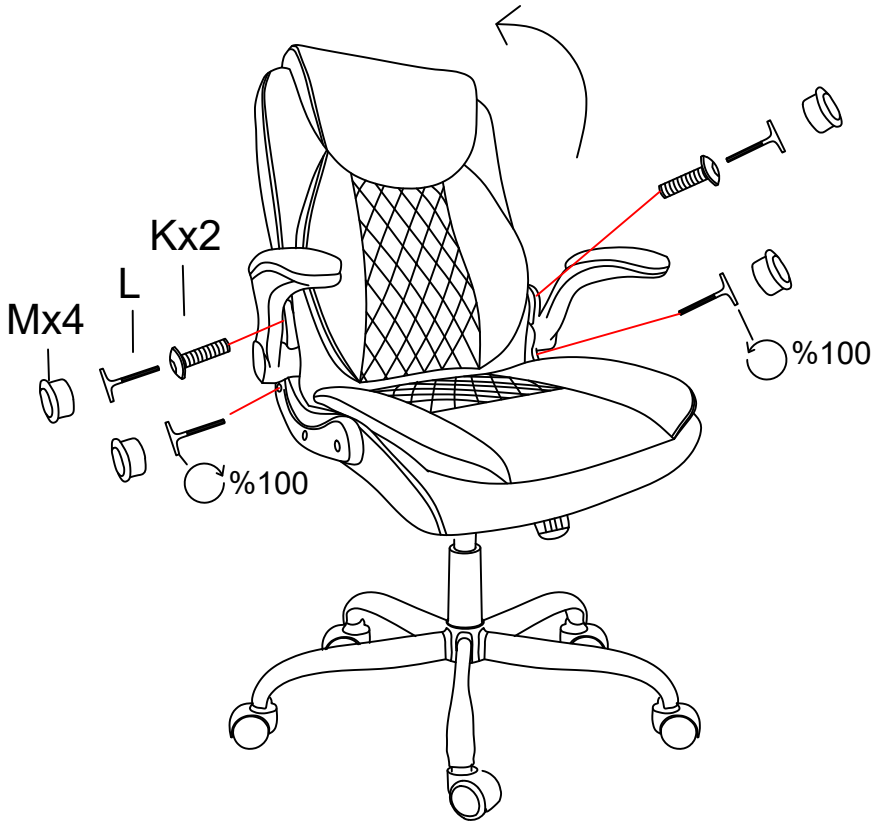

11

If there are any missing parts or quality problems, please contact me via email: **yfochair@outlook.com**