Assembly Instructions

Caution: You must read this before you proceed

Care & Maintenance

	● Not for commercial use. For residential use only.
	● Do not put hot items directly on furniture surface.
	● Do not clean furniture with harsh cleansers or polish.
	● Do not place furniture under direct sunlight.
	● Do not place furniture near heating or cooling vents.
	● Do not write on furniture without a padded barrier to protect the surface.
	● Do not place furniture outside . For indoor use only.
	● Stains may be removed with mild soap solution and damp cloth.
	● Children should not climb or jump on the furniture.
	● Dust and pick-up spills using a clean, non-colored, lint-free cloth.

QUEEN BED

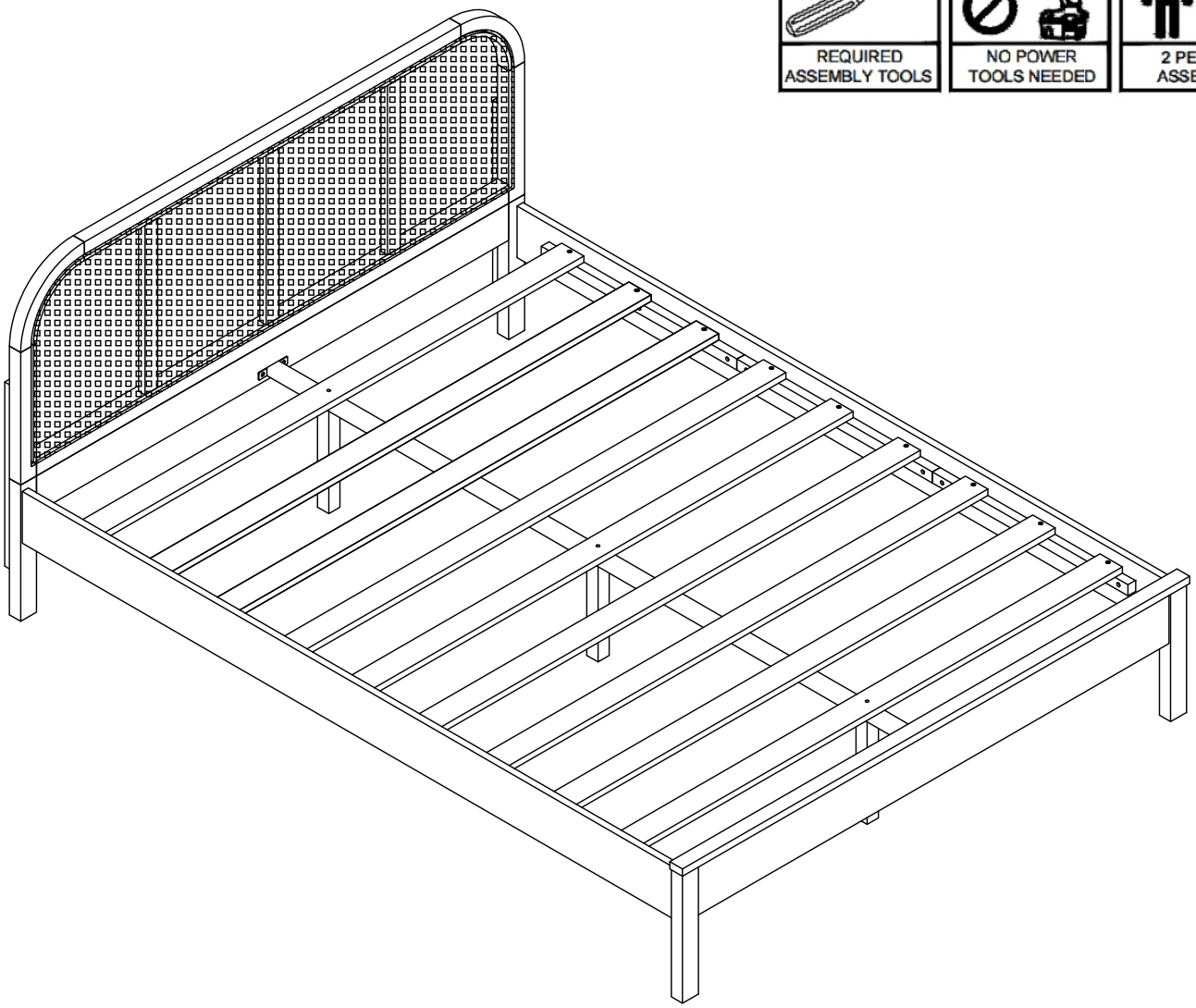

WARNING

STRANGULATION HAZARD.

NEVER place bed near windows where cords from blinds or drapes may strangle a child.
NEVER suspend strings over bed.
NEVER place items with a string,cord,or ribbon, such as hood strings or pacifier cords, around a child's neck. These items may catch on bed parts.
ALWAYS follow assembly instructions.

WARNING!

Not intended for children under the age of six.INFANTS HAVE DIED FROM BECOMING ENTRAPPED IN BEDS. Openings in and between bed parts can entrap the neck and head of a small child. NEVER use bed for child under the age of six.

The mattress must be appropriately sized for the bed. If the mattress is undersized, dangerous gaps can exist and a person can become entrapped or entangled in the frame and suffocate.

Note: This Bed is NOT a TOY.
Keep your child/children at bay during the assembly process.
The BED is HEAVY.
To prevent injury to yourself or damage to the product a minimum of two adults are required whenever moving or lifting it.

Part List BOX 1 OF 2 N758P404652

Label	Picture	Description	Qty
A		Headboard	1
K		Slats	5
J		Slats with Mounting Position	3

Part List BOX 2 OF 2 N758P404653

Label	Picture	Description	Qty
B		Headboard Leg-L	1
C		Headboard Leg-R	1
D		Cross Panel	1
E		Support Legs	2
F		Footboard	1
G		Footboard Leg -L	1
H		Footboard Leg -R	1
I		Side Panel	2
K		Slats	1
L		Center Leg	3
M		Metal Support	1

Hardware List - (BOX 1/ N758P404652)

Label	Picture	Description	Qty
1		Wooden Dowel ∅ 10 x 30	15
2		Bolt 1/4” x 50	4
3		Bolt 1/4” x 38	22
4		Bolt 1/4” x 15	5
5		Bolt 1/4” x 10	13
6		Flat washer 1/4” x 13	22
7		Spring washer 1/4” x 13	22
8		Flat screw M4 x 25 extra =4pc	22
9		Allen Wrench K4 x 80	2
10		Screwdriver (Not provided)	1

Assembly Preparation

Before Beginning Assembly:

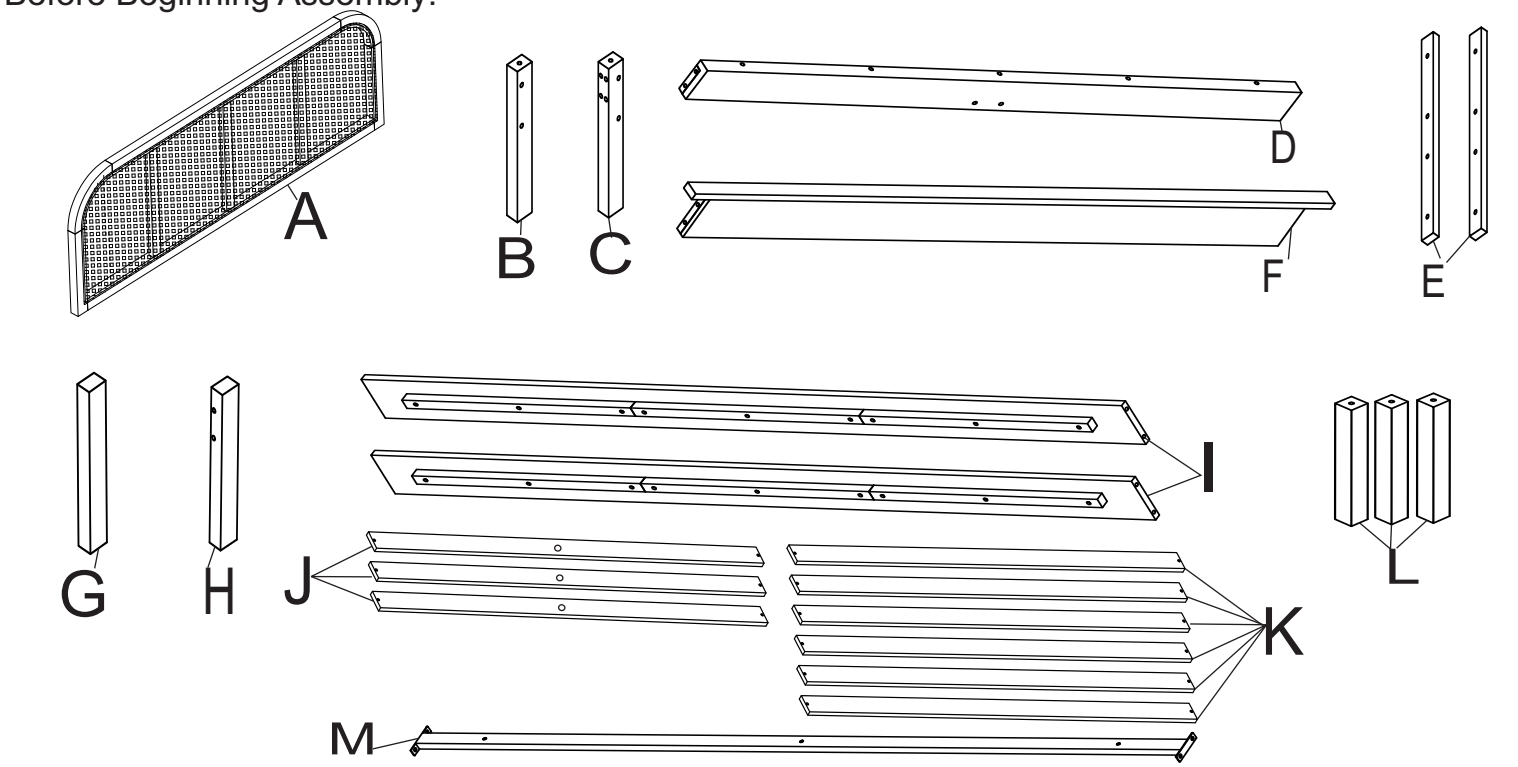

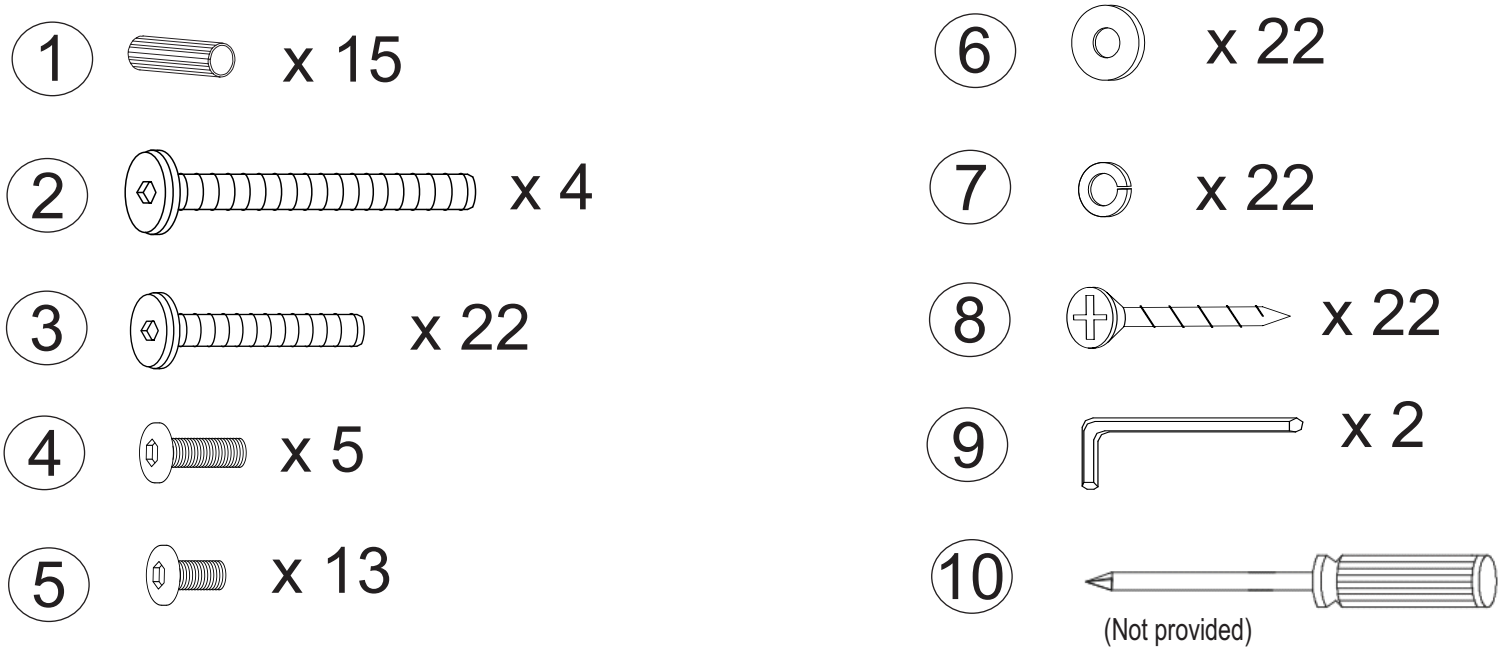

- Read instructions, cover to cover-
- Have 2 adults on hand for assembly-
- Do not assemble on flooring or carpet-
- Assemble on a clean non-marring surface (packing foam)-
- Save all packaging until finished-

Assembly Steps

Overview

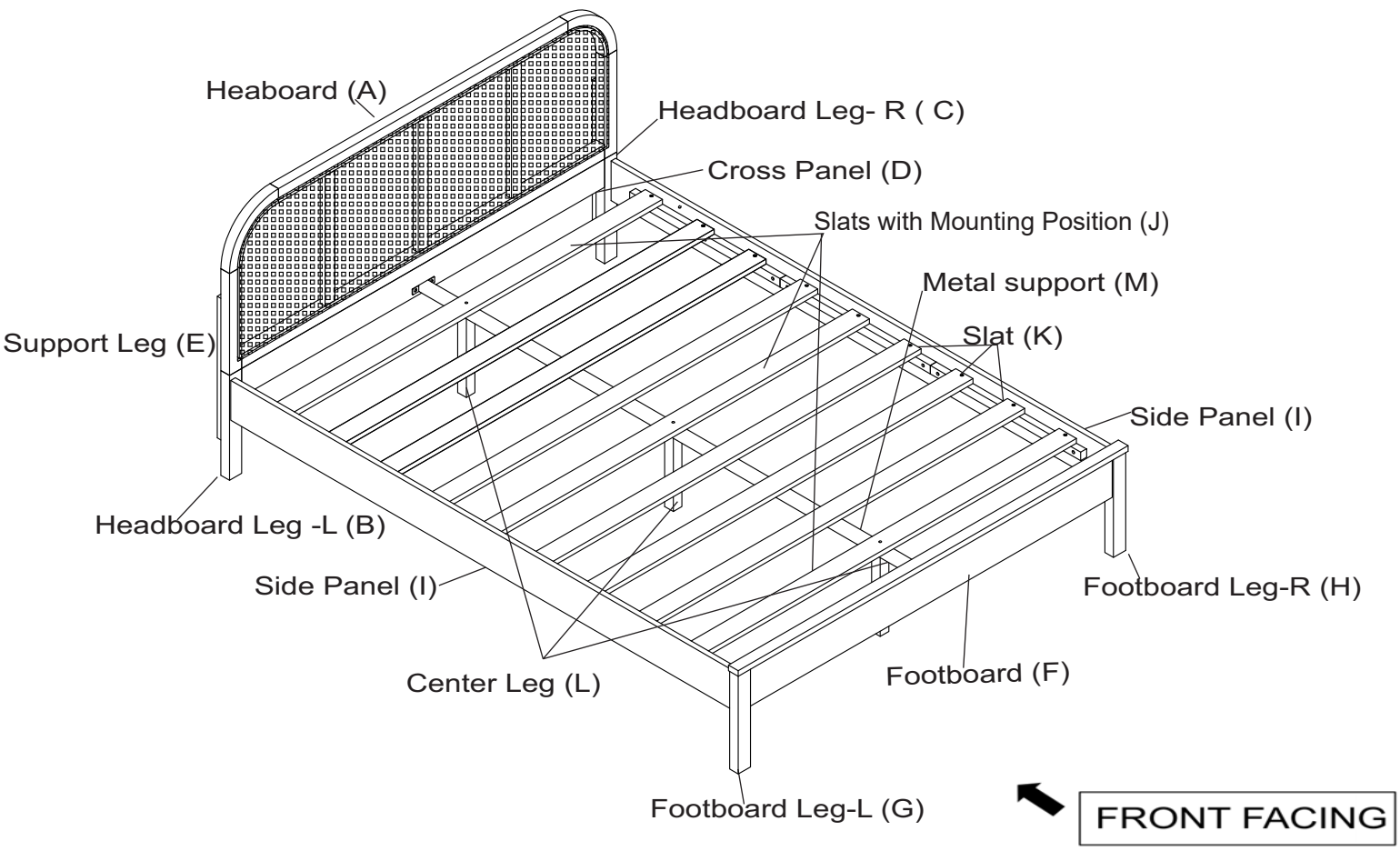

This Bed has multiple parts and may require up to 30 minutes to assemble. To give you an overview of the Bed parts, the above picture is provided to help you put the various parts into perspective. Please read through the instructions below to familiarise yourself with the parts and steps before assembly.

Step 1

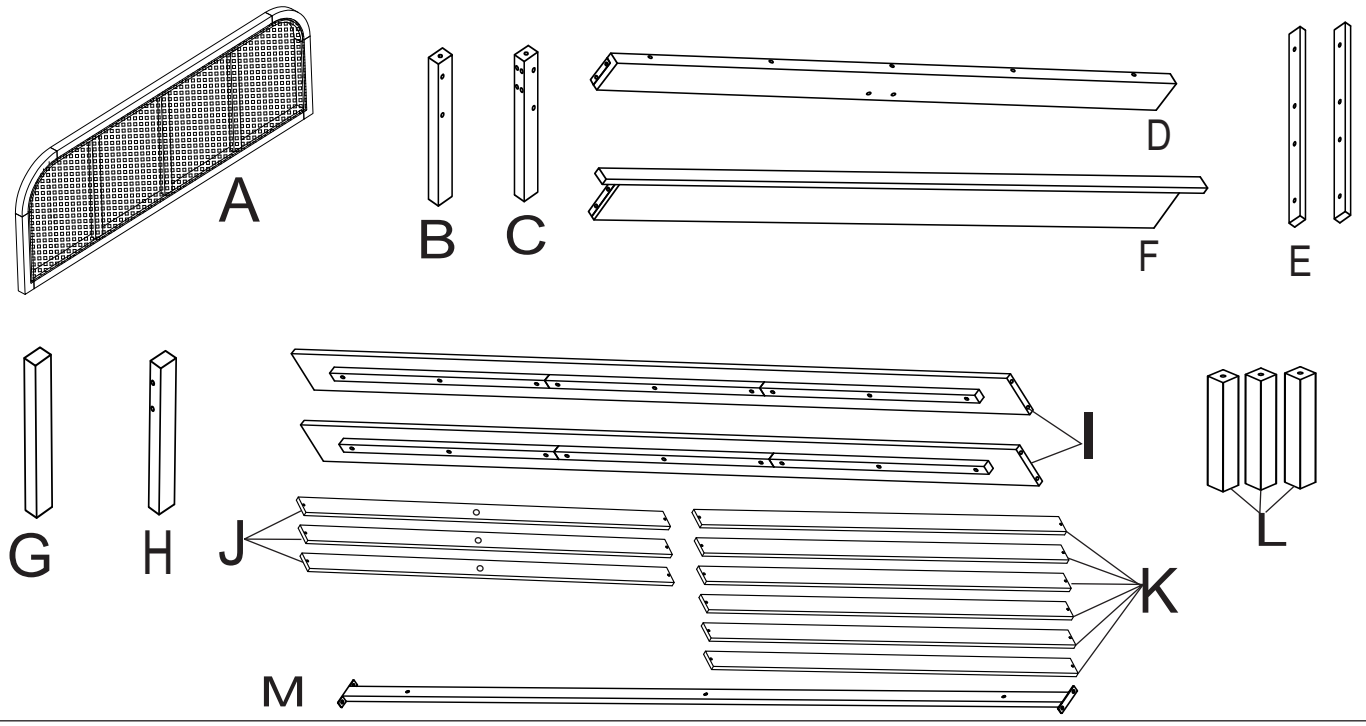

Unpack and place all parts on a clean, non-marring surface.

Step 2

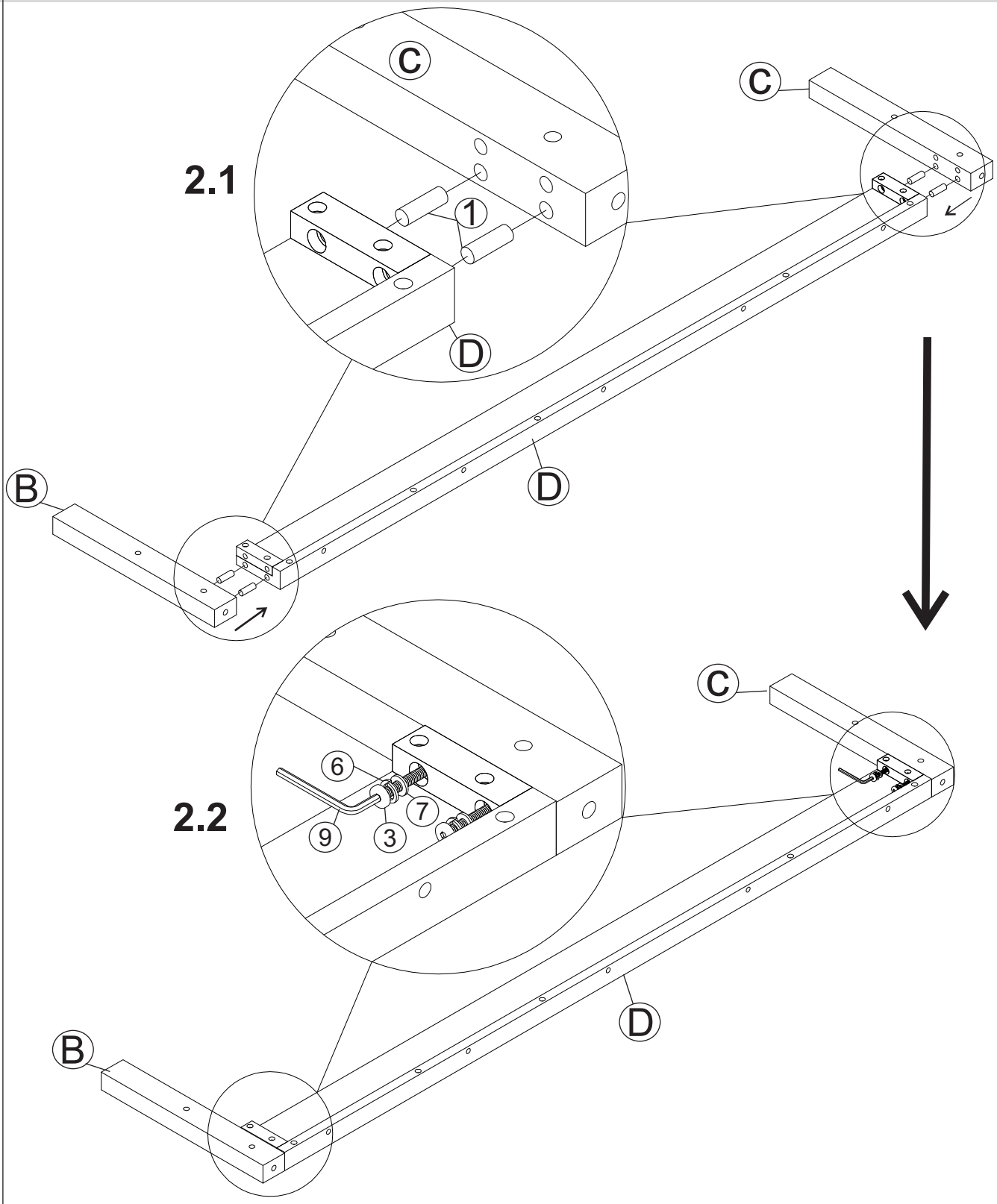

Attach the Left and Right Headboard Legs (B) & (C) to the Cross Panel (D).
2.1: Insert the Wooden dowels 10 × 30 (①) to hold the parts in place.
2.2: Affix Cross Panel (D) to Left and Right Headboard Legs (B) & (C) by using the Bolts (③) + Spring washers (⑥)+ Flat washers (⑦) with the Allen Wrench (⑨).
At this step, fully tighten the Bolt.

Step 3

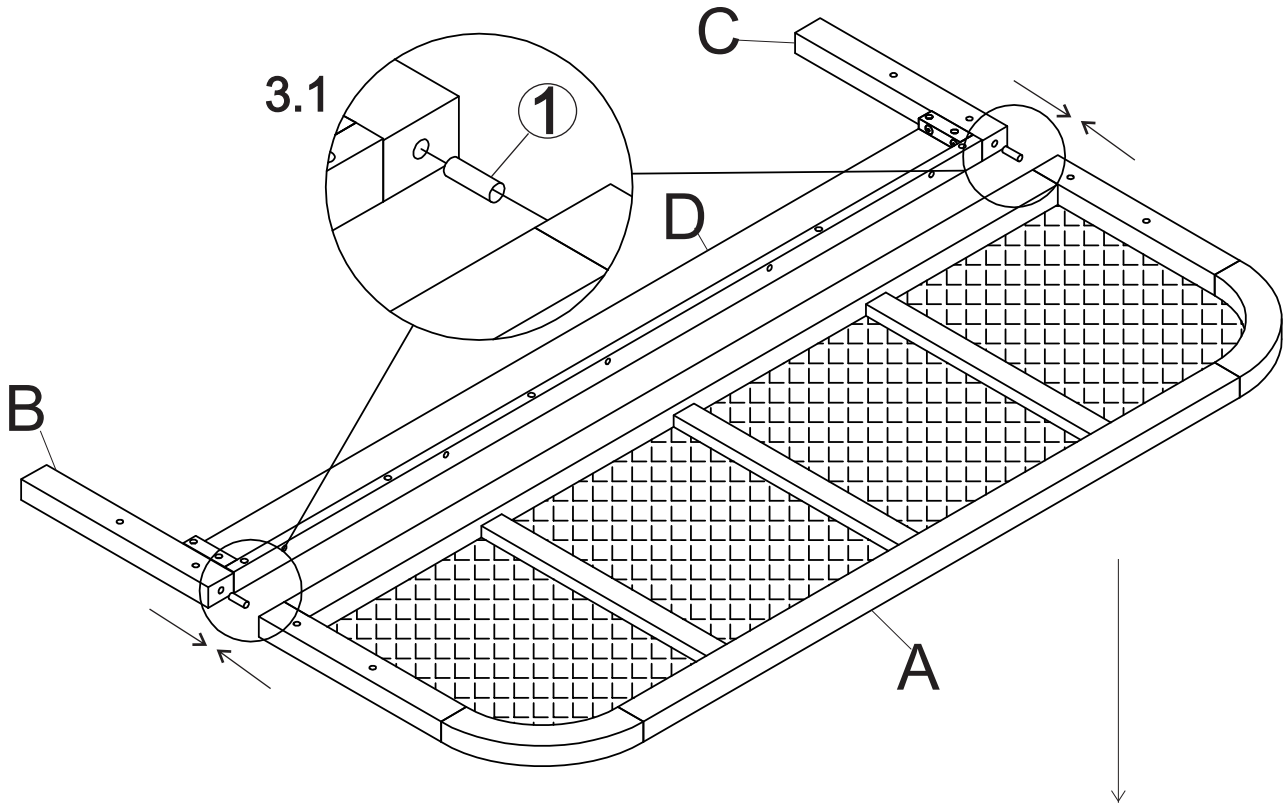

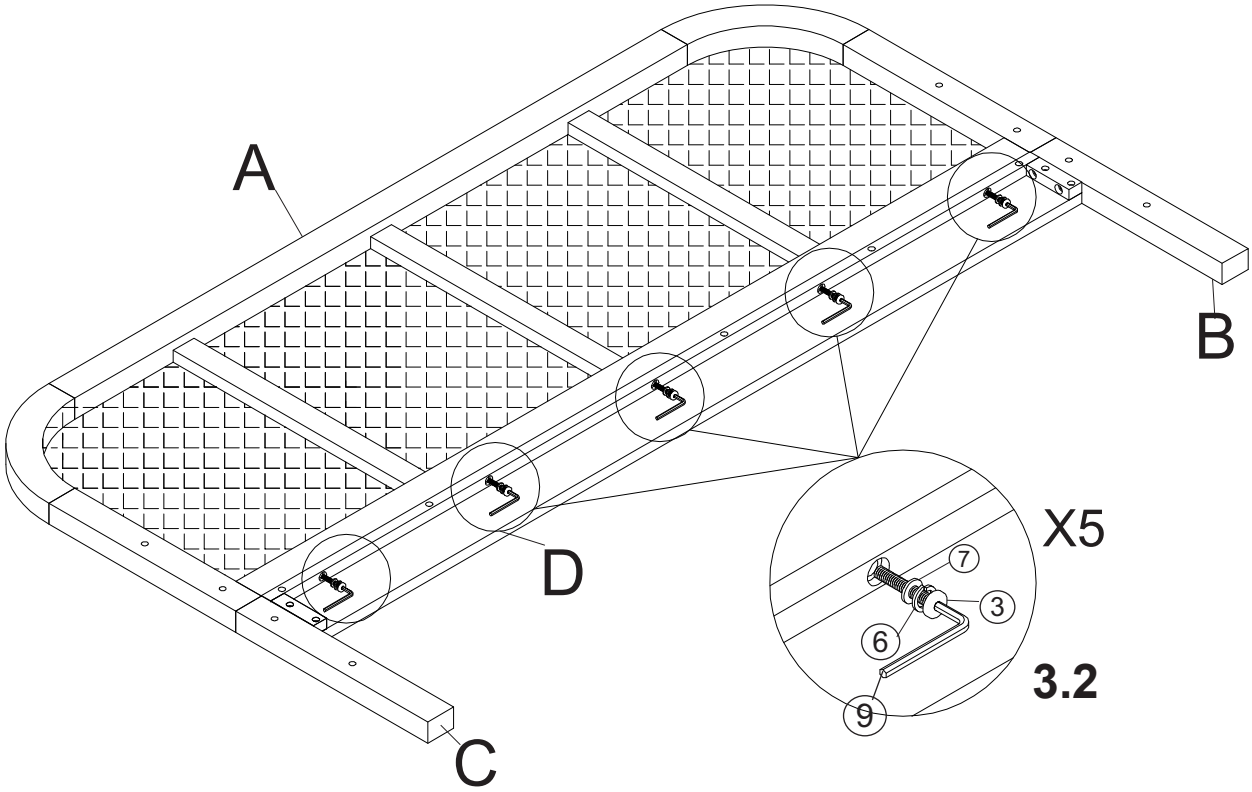

Attach the Head board (A) to assembled Cross Panel (D).

3.1: Insert the Wooden dowels 10 × 30 (1) to the mounting position on Left and Right Headboard Legs (B) & (C) and Head board (A) as shown above.

3.2: Affix Head board (A) to Cross Panel (D) by using the Bolts (3)+ Spring washers (6) + Flat washers (7) with the Allen Wrench (9).

At this step, fully tighten the Bolt.

Step 4

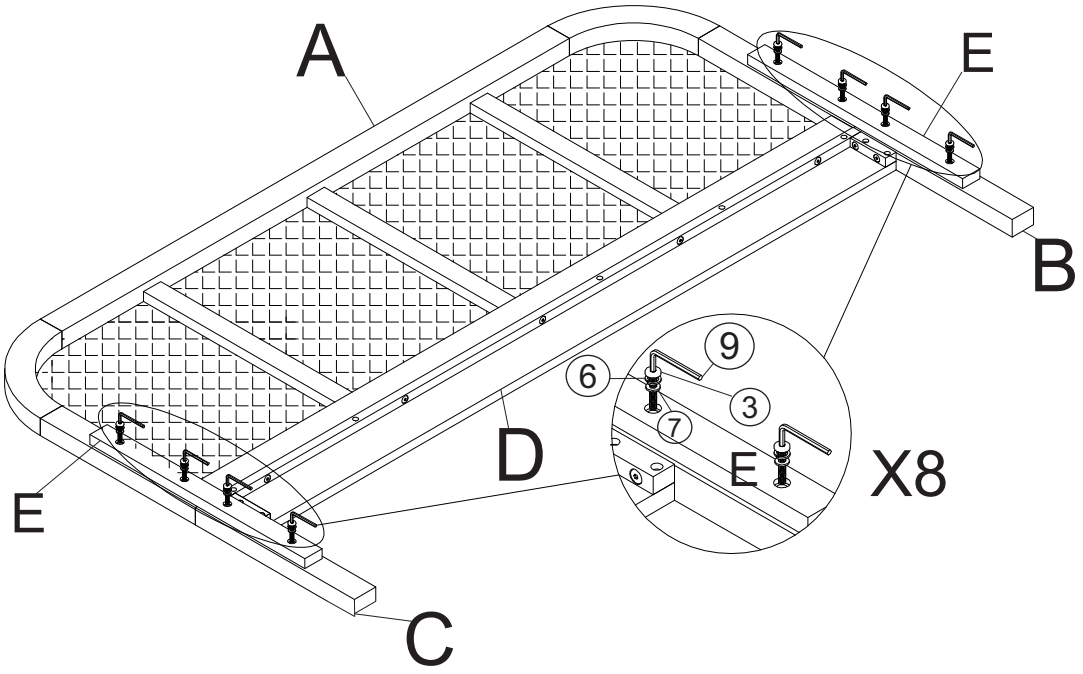

Attach the Support Legs (E) to the back of assembled Headboard to secure by use the Bolts (3) Spring washers (6) Flat washers (7) with the Allen Wrench (9).
At this step, fully tighten the Bolt.

Step 5

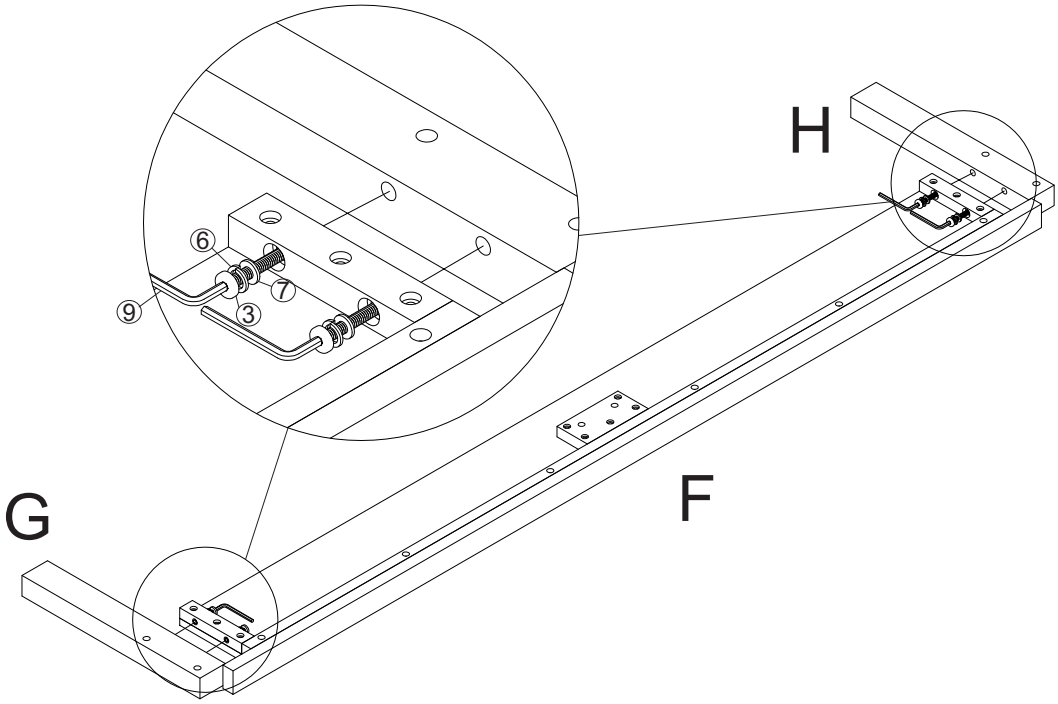

Attach the Left and Right Footboard Legs (H) & (G) to the Foot Board (F) by using the Bolts (3) + Spring washers (6) + Flat washers (7) with the Allen Wrench (9).
At this step, fully tighten the Bolt.

Step 6

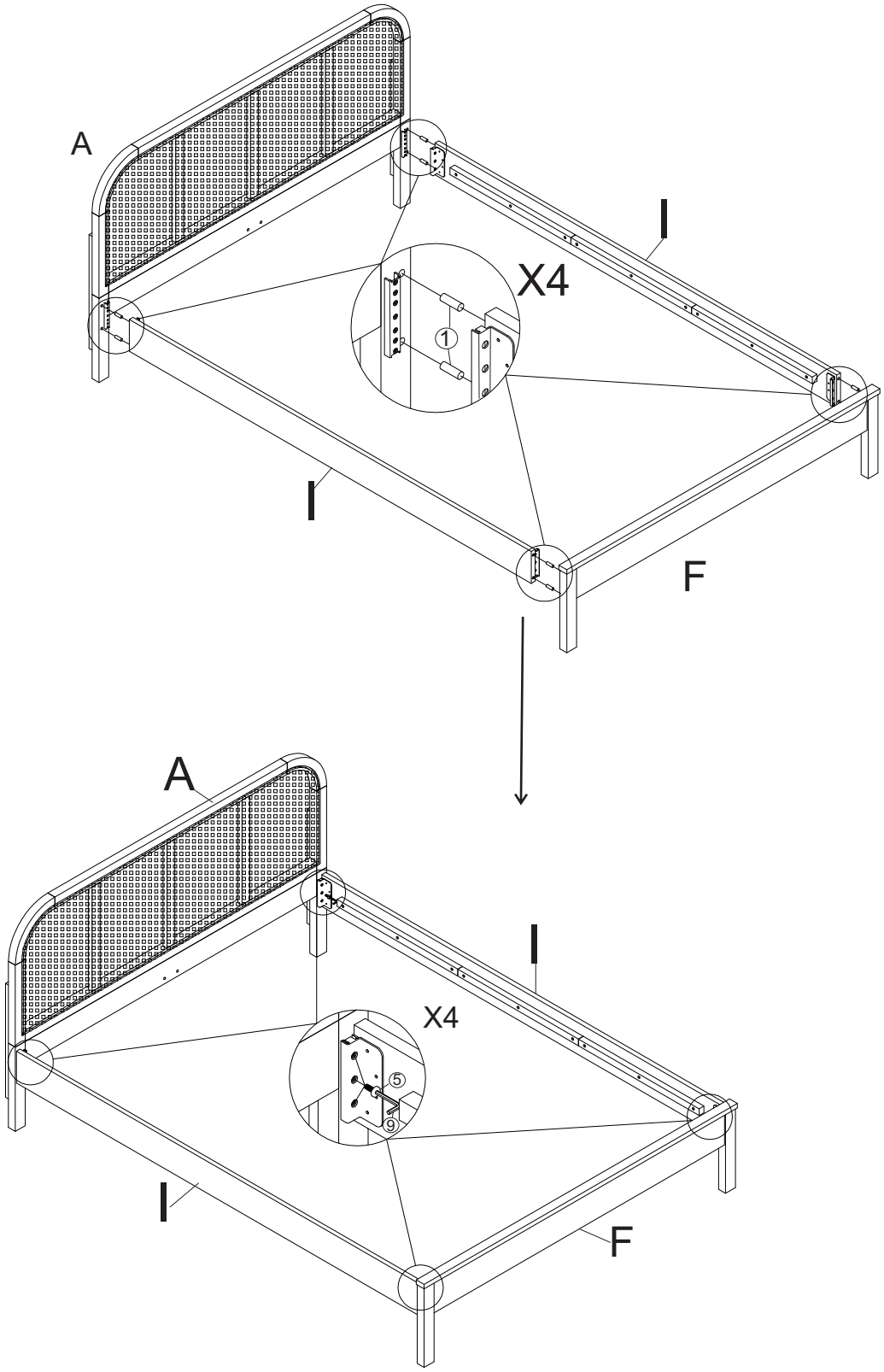

With the help from you partner, stand the assembled headboard (A) and Food Board (F) up as shown in picture above.

Insert the Wooden dowels (①) to the mounting position between Side Panel (I) and Headboard (A) & Food Board (F) to connect the parts.

Affix the Side Panel (I) to Headboard (A) and Foot Board (F) using the Bolts (⑤) and the Allen Wrench (⑨). **Don't fully tighten the Bolt.**

Step 7

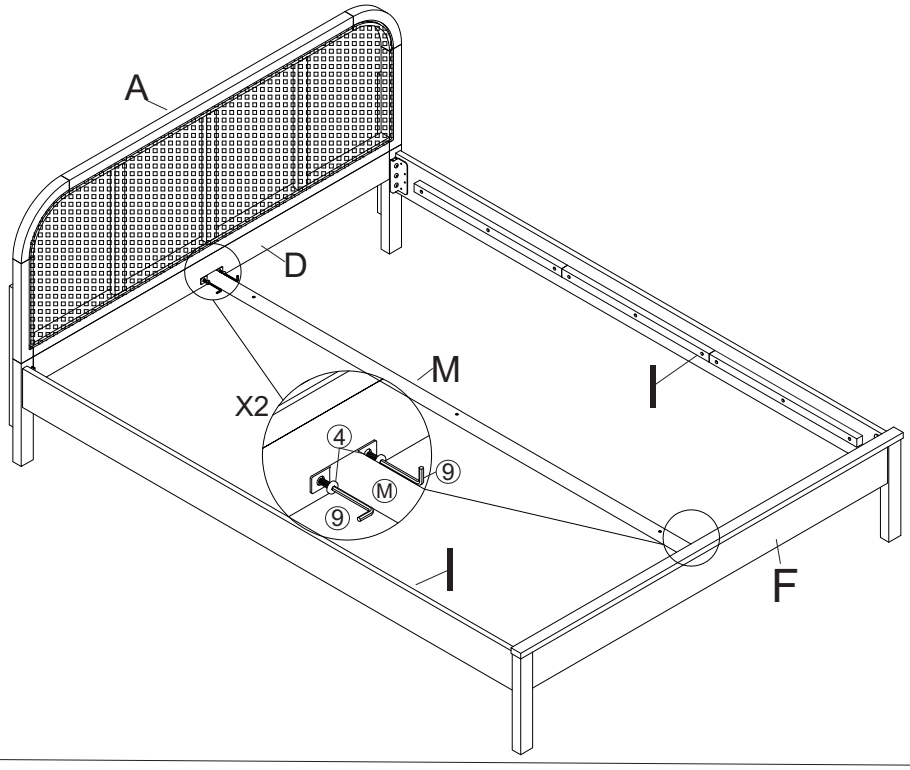

Attach the Metal support (M) to the Foot Board (F) and Cross Bar (D) of Headboard (A) by using the Bolts 1/4" × 15 (④) with Allen Wrench (⑨).

At this step, Fully tighten the Bolt.

Step 8

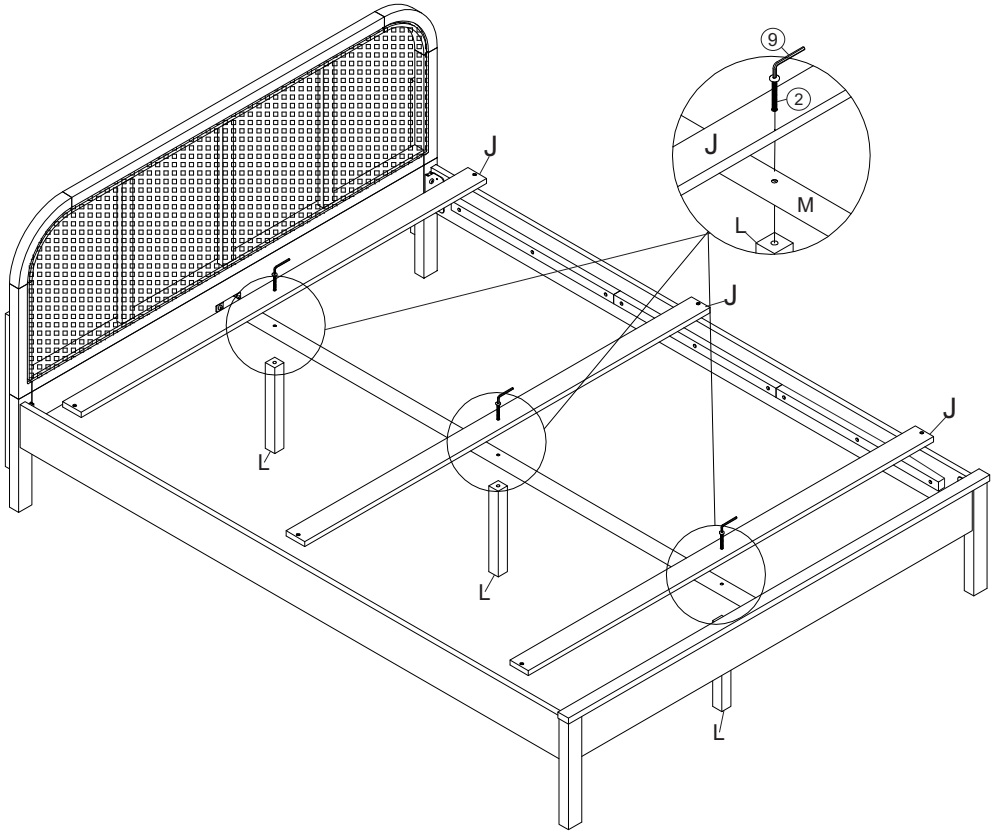

Attach the Slat (J) to Metal Support (M) and Center Legs (L) .Then Secure by Bolt 1/4" x 50 (②) with Allen Key (⑨).

At this step, Fully tighten the Bolt.

Step 9

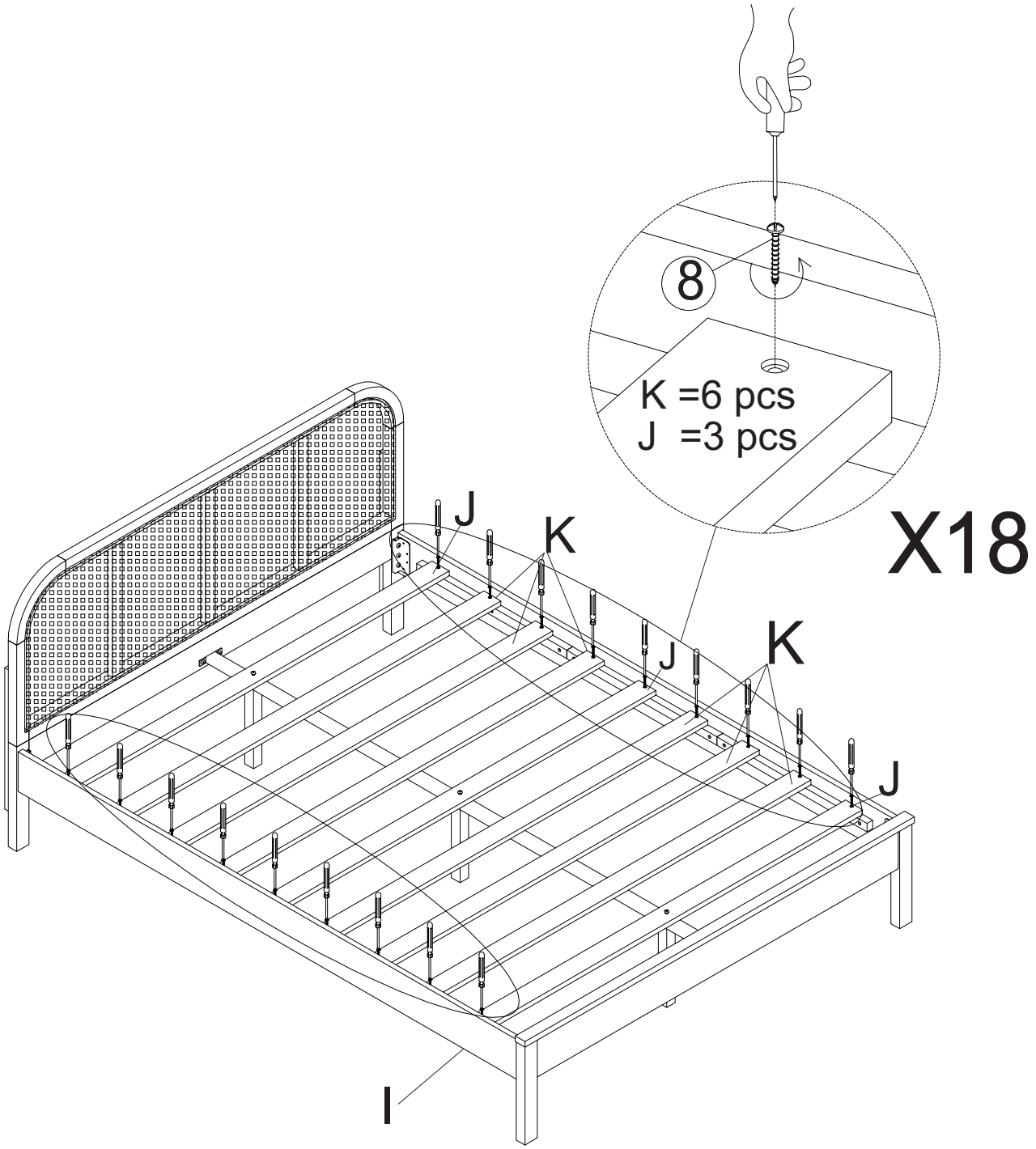

Attach all slats (K) and (J) to the Side Panel (I) by using Screws (8) with Screwdriver (Not Provided).

Step 10

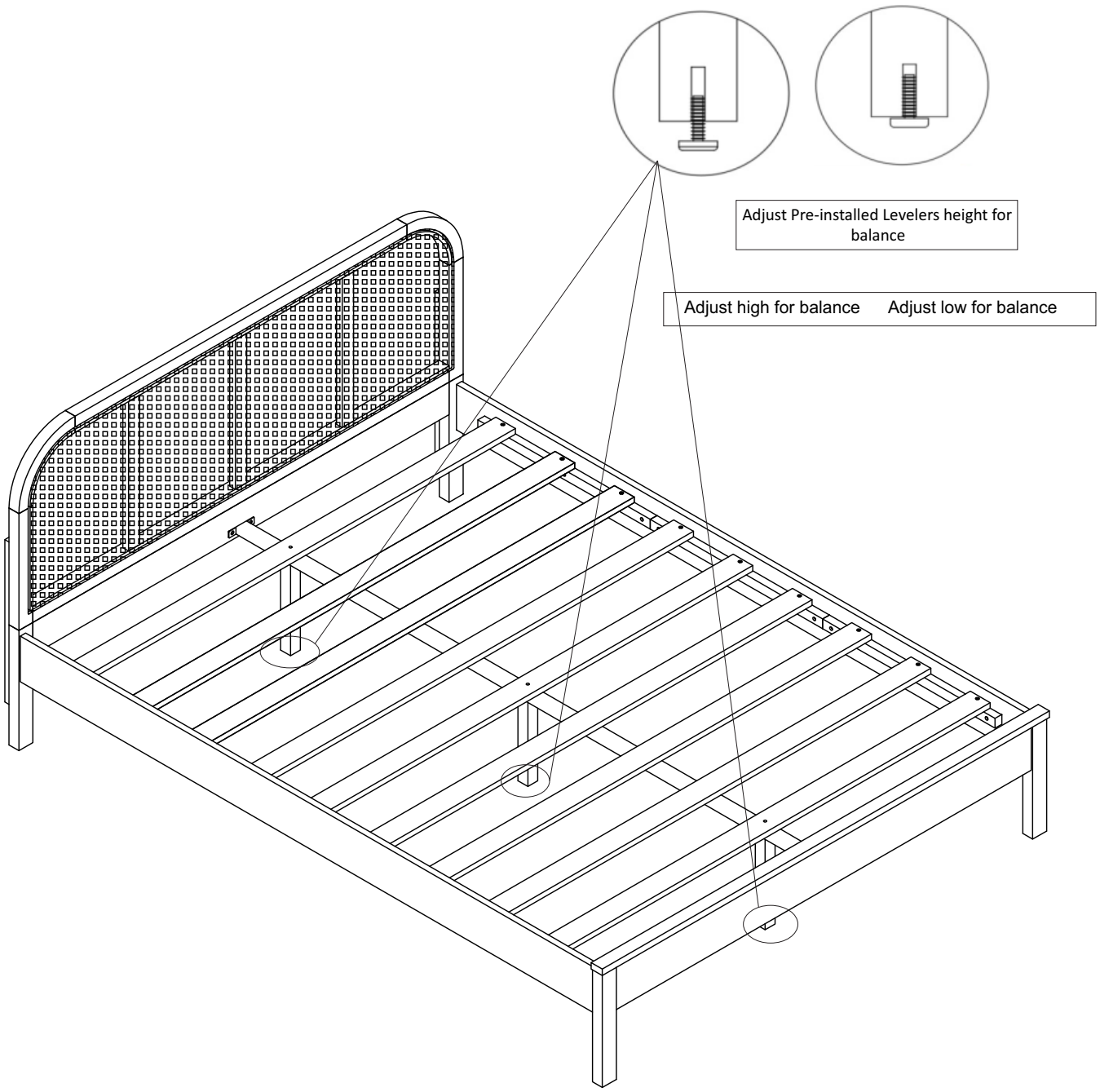

- Check for wobbles.
- In a sequential manner, gradually tighten all Bolts until evenly secured.
- **Inspect the Bed and make sure all parts are adequately connected.**
- With assistance from your adult partner, adjust the Levelers to desired height to avoid wobbles.
- To adjust the Levelers, get assistance from an adult partner to lift/ lean and hold the Bed while you are working.
- Your Bed is ready for use.
- **This Bed can only be used on a flat, level surface.**