Assembly Instructions

CAUTION: You must read these Assembly Instructions before you proceed.

Care & Maintenance

- Not for commercial use. For residential use only.
- Do not put hot items directly on furniture surface.
- Do not clean furniture with harsh cleansers or polish.
- To obtain the longest lifespan of your outdoor products, minimizing exposure to direct sunlight is recommended.
- Children should not climb or jump on the furniture.
- Do not write on furniture without a padded barrier to protect the surface.
- To obtain the longest lifespan of your outdoor products, avoid extended and lengthy exposure to rain, snow, and direct sunshine.
  Whenever possible cover the product and /or place under patio or awnings.
- Stains may be removed with mild soap solution and damp cloth.
- Keep away from sources of ignition.
- Dust and pick-up spills using a clean, non-colored, lint- free cloth.

Please look in Seat Panel for hardware packs

CHAIR

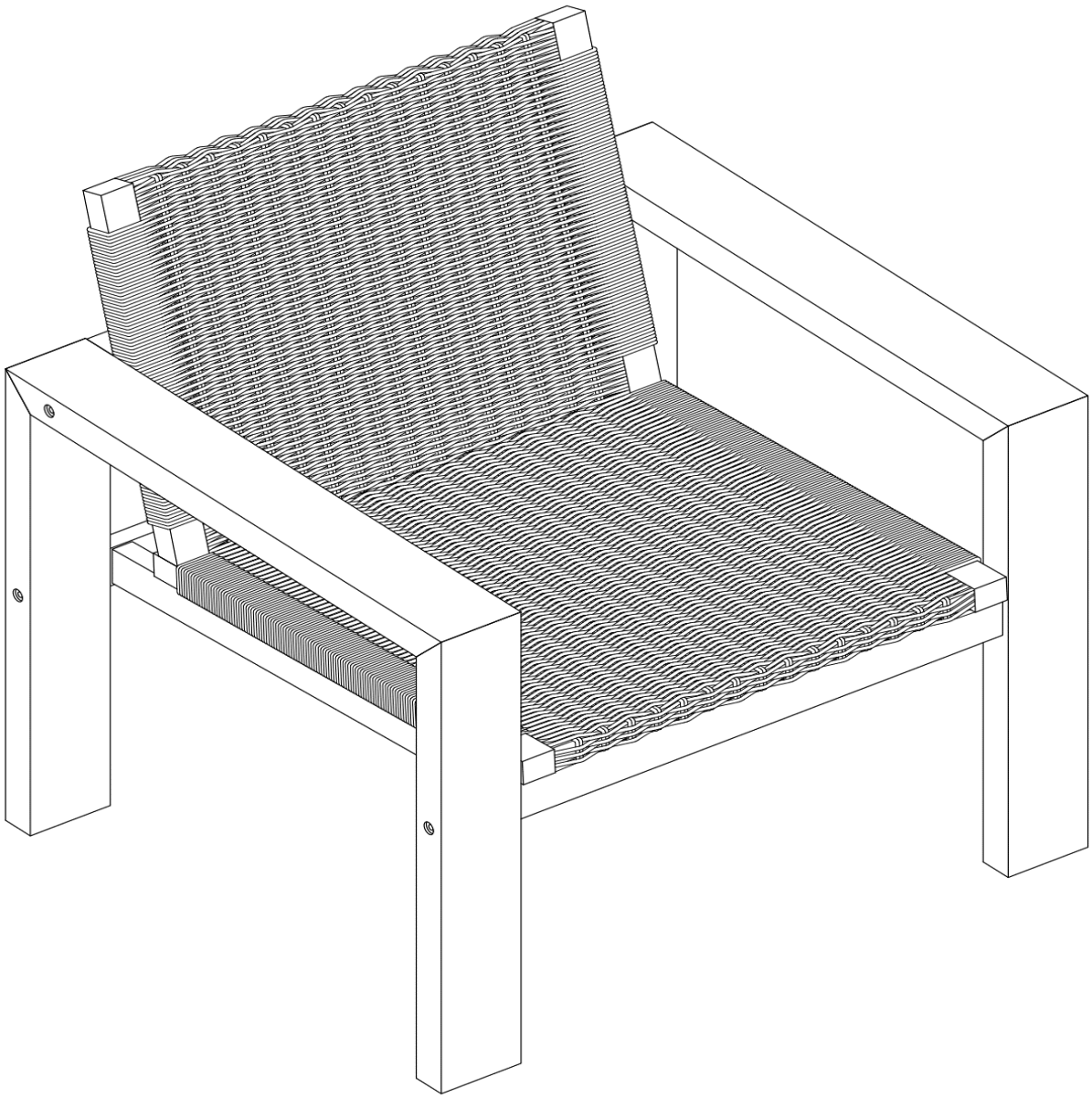

Parts List:

Label	Picture	Description	Qty
A	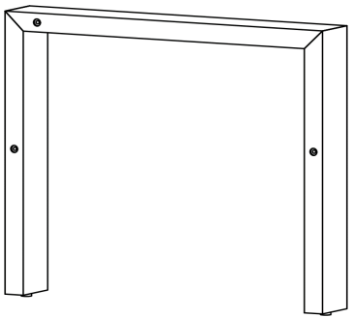	Left Leg Panel	1
B	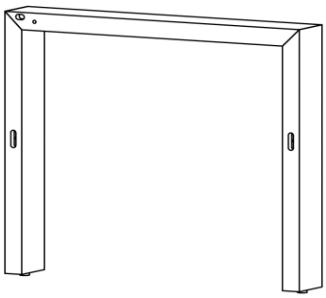	Right Leg Panel	1
C	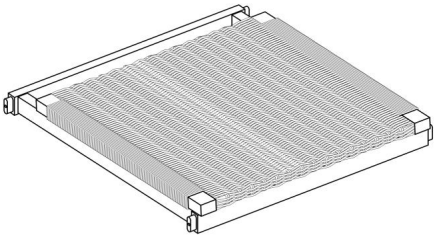	Seat Panel	1
D	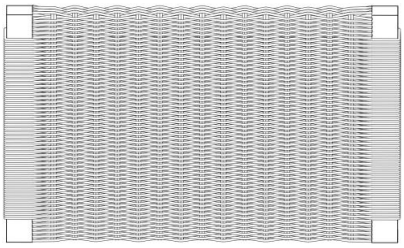	Backrest Panel	1
E	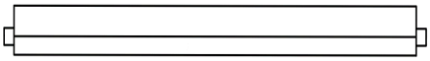	Support Bar	1

Hardware:

Label	Picture	Description	Qty
①	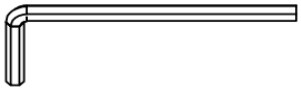	Allen Wrench	1
②	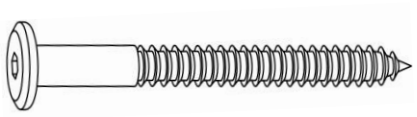	Screw (M7x130mm)	7
③	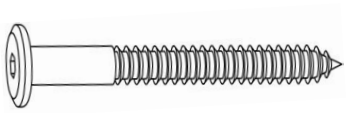	Screw (M6x80mm)	3
④	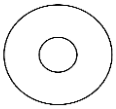	Plastic Washer (Ø7x Ø20 x 2mm)	3

Assembly Preparation:

Before Beginning Assembly:

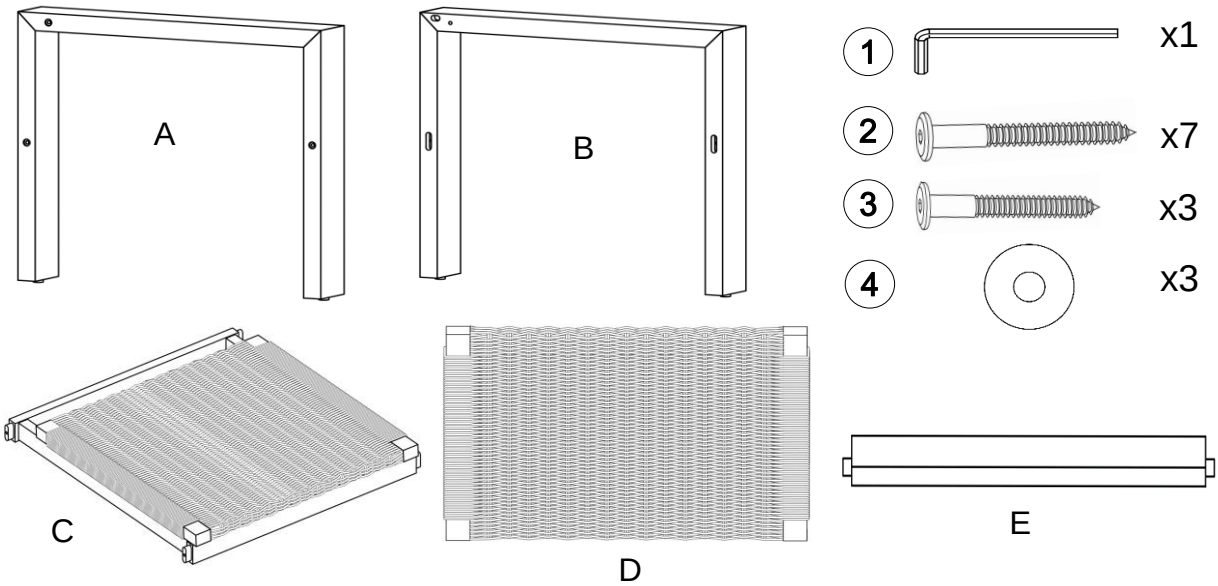

- Read instructions, cover to cover-
- Have 2 adults on hand for assembly-
- Do not assemble on flooring or carpet-
- Assemble on a clean non-marring surface (packing foam)-
- Save all packaging until finished-

Assembly Step:

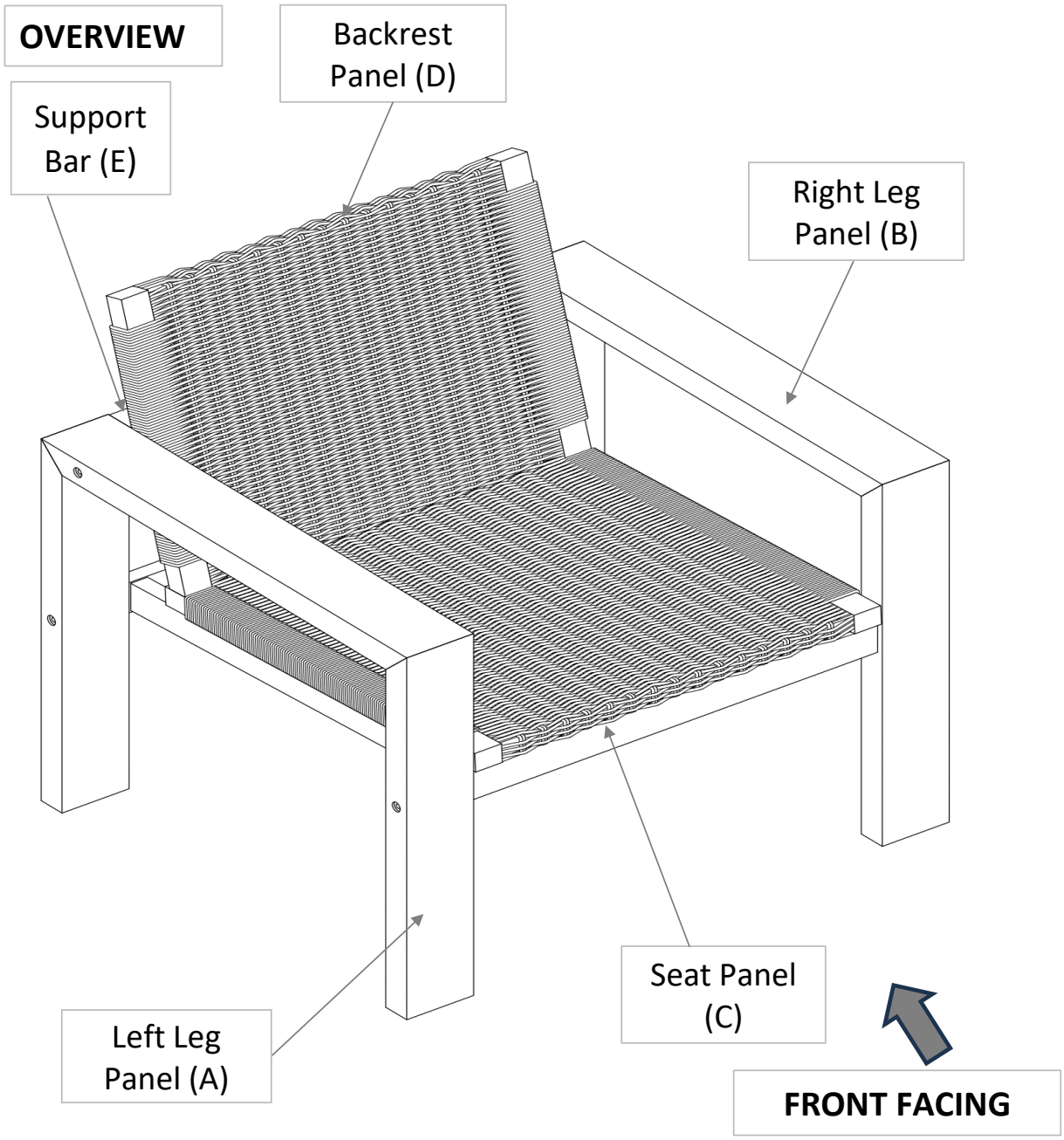

This Chair has multiple parts and may require up to some 30 minutes to assemble.
To give you an overview of the Chair, the above picture is to help you put the various parts into perspective.
Please read through the instructions here below to familiarise yourself with the parts and steps before assembly.

Step 1

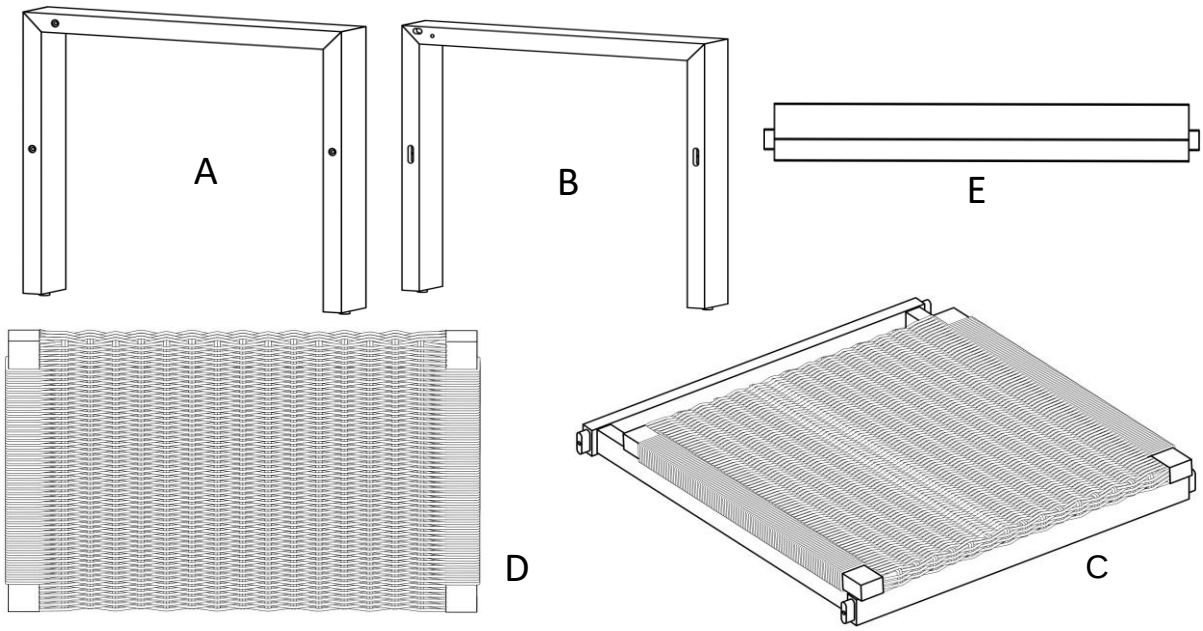

Unpack and place all parts on a clean, non-marring surface.

Step 2

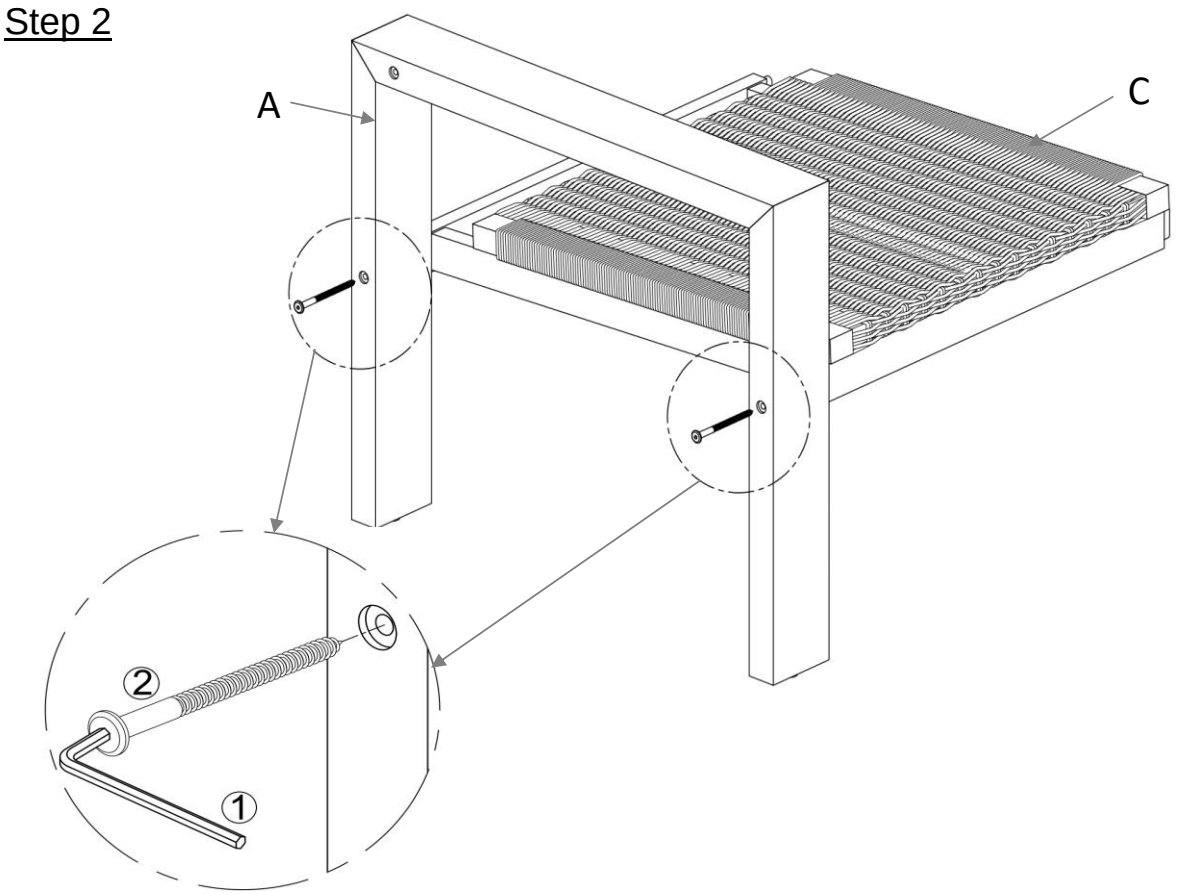

With assistance from your adult partner, attach Left Leg Panel (A) to the Seat Panel (C) and then secure by using Screws (②) with Allen Wrench (①) as shown above.

Do not fully tighten the Screws.

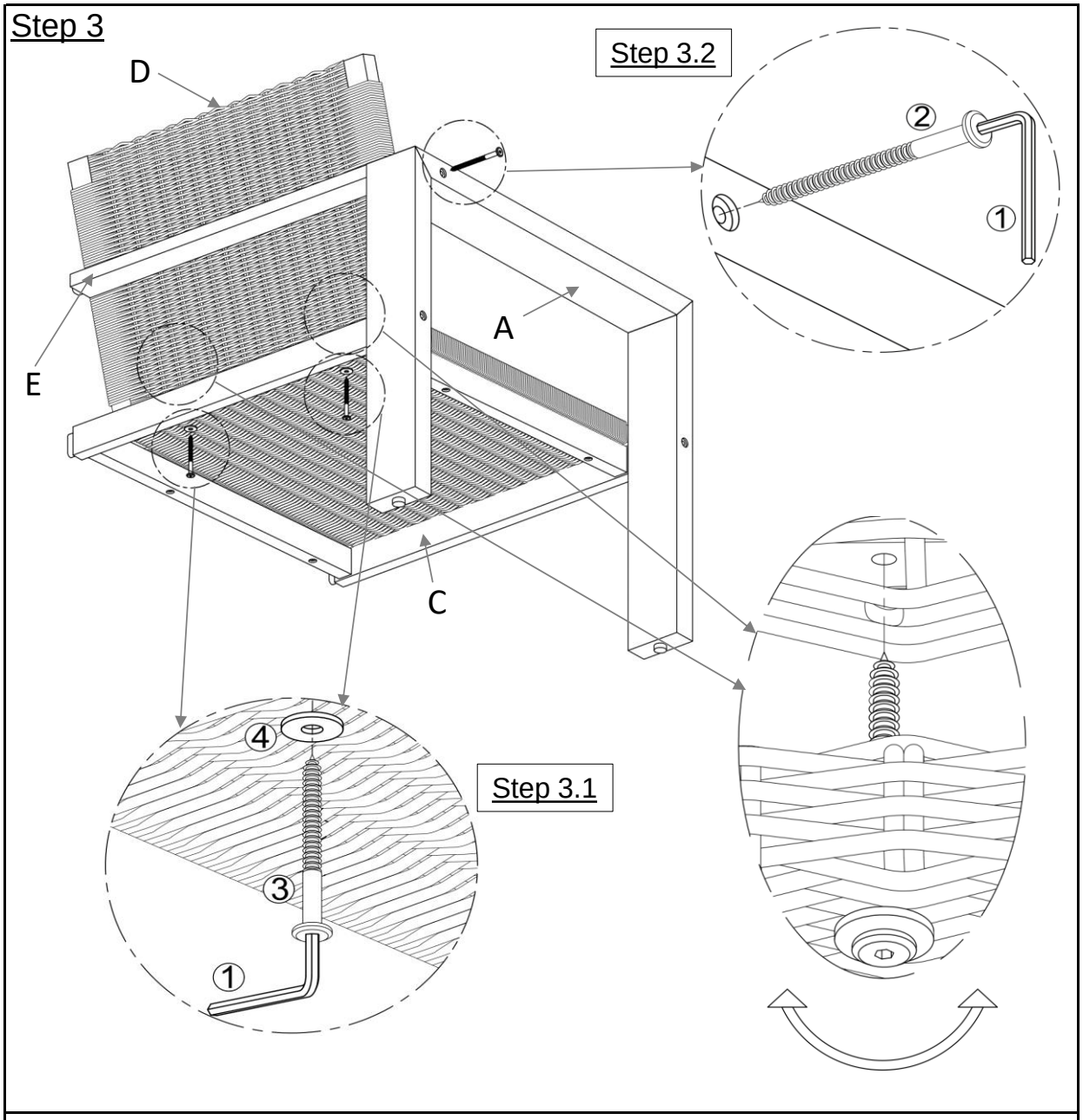

With assistance from your adult partner, attach Backrest Panel (D) and Support Bar (E) to the assembled part in Step 2 as shown above, then:
Step 3.1, secure Backrest Panel (D) to Seat Panel (C) by using Screws (③) and Plastic Washers (④) with Allen Wrench (①).
Step 3.2, secure Backrest Panel (D) to Left Leg Panel (A) by using Screw (②) with Allen Wrench (①).
<u>Do not</u> fully tighten the Screws.

Step 4

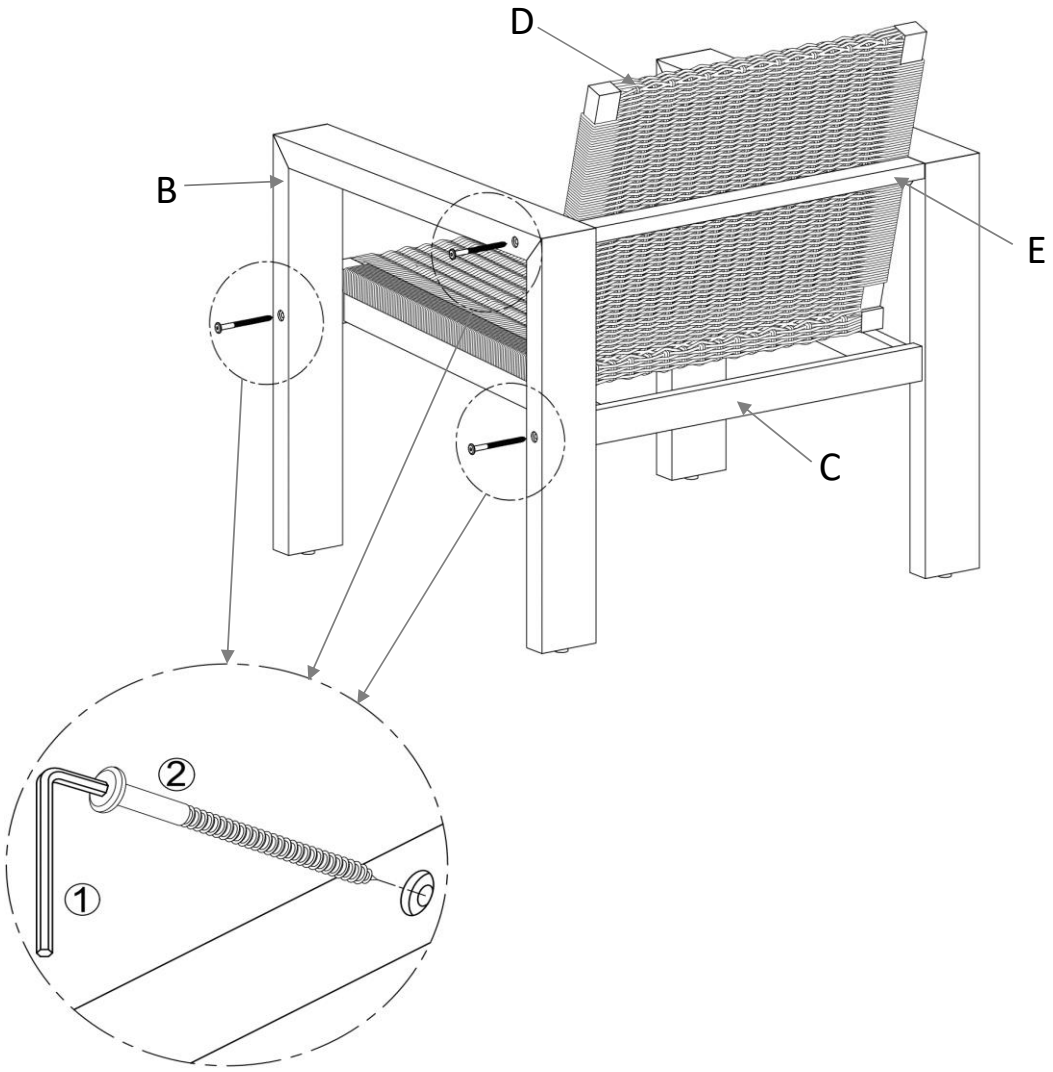

With assistance from your adult partner, attach Right Leg Panel (B) to the assembled part in Step 3 as shown above.
Then secure Right Leg Panel (B) to both Backrest Panel (D) and Seat Panel (C) by using Screws (②) with Allen Wrench (①).
<u>Do not</u> fully tighten the Screws.

Step 5

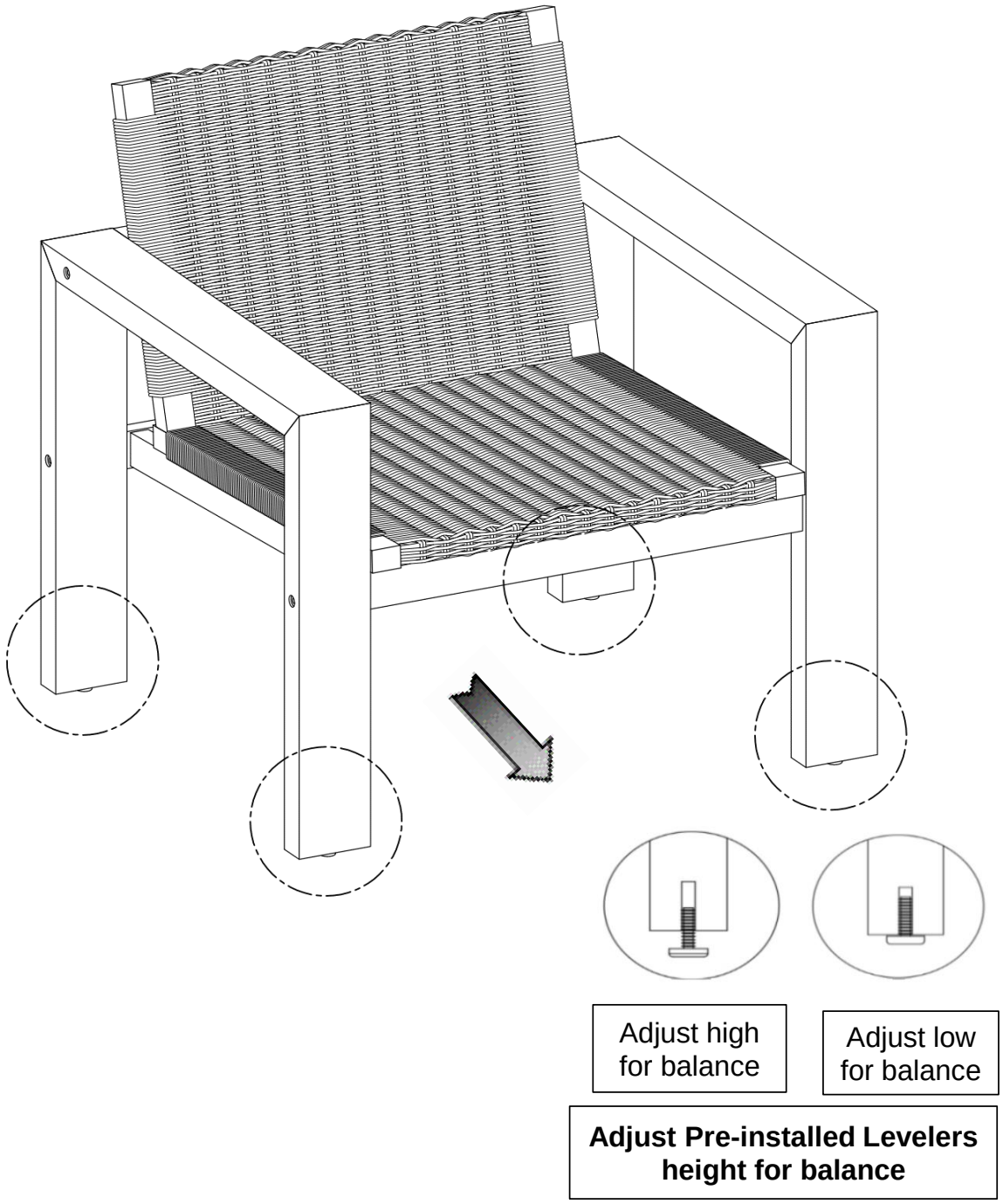

Inspect it and make sure all parts are adequately connected.
Gently and gracefully, sit onto the Chair.
This will help to align all the parts at all joint areas.
Then get off the Chair and proceed to tighten the Screws in a sequential manner.
When tightening the Screws tighten sequentially.
DO NOT tighten any Screws fully and then move on towards the next one.
If there are still wobbles, loosen the Screws execute this same process.
Adjust Pre-installed Levelers height for balance.

Questions & Answers about Proposition 65

• What is Proposition 65?

Proposition 65 requires businesses to provide warnings to Californians about significant exposures to chemicals that cause cancer, birth defects or other reproductive harm. These chemicals can be in the products that Californians purchase, in their homes or workplaces, or that are released into the environment. By requiring that this information be provided, Proposition 65 enables Californians to make informed decisions about their exposures to these chemicals.

Proposition 65 also prohibits California businesses from knowingly discharging significant amounts of listed chemicals into sources of drinking water.

Proposition 65 requires California to publish a list of chemicals known to cause cancer, birth defects or other reproductive harm. This list, which must be updated at least once a year, has grown to include approximately 900 chemicals since it was first published in 1987.

• What types of chemicals are on the Proposition 65 list?

The list contains a wide range of naturally occurring and synthetic chemicals that include additives or ingredients in pesticides, common household products, food, drugs, dyes, or solvents. Listed chemicals may also be used in manufacturing and construction, or they may be byproducts of chemical processes, such as motor vehicle exhaust.

• What does a warning mean?

If a warning is placed on a product label or posted or distributed at a workplace, a business, or in rental housing, the business issuing the warning is aware or believes that it is exposing individuals to one or more listed chemicals.

By law, a warning must be given for listed chemicals unless the exposure is low enough to pose no significant risk of cancer or is significantly below levels observed to cause birth defects or other reproductive harm.

• Where can I get more information on Proposition 65?

If you have specific questions on the administration or implementation of Proposition 65, you can contact OEHHA's Proposition 65 program at P65.Questions@oehha.ca.gov, or by phone at (916) 445-6900.