Assembly Instructions

Caution : You must read this before you proceed

Care & Maintenance

- Not for commercial use. For residential use only.
- Furniture may scratch floors. We recommend using furniture pads to protect your floors.
- Do not put hot items directly on furniture surface.
- Do not clean furniture with harsh cleansers or polish.
- Do not place furniture under direct sunlight.
- Do not place furniture near heating or cooling vents.
- Do not write on furniture without a padded barrier to protect the surface.
- Do not place furniture outside . For indoor use only.
- Stains may be removed with mild soap solution and damp cloth.
- Children should not climb or jump on the furniture.
- Dust and pick-up spills using a clean, non-colored, lint-free cloth.

Please look in boxes for hardware packs and legs.

Dining Chair

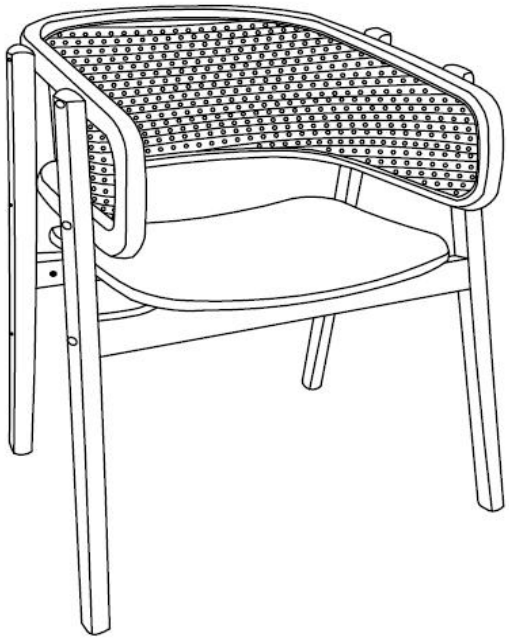

Parts List

Label	Picture	Description	QTY
A	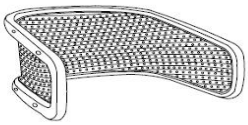	Backrest	1
B		Seat	1
C		Left Front Leg	1
D		Right Front Leg	1
E		Left Back Leg	1
F		Right Back Leg	1
G		Front Cross Bar	1
H		Back Cross Bar	1

Hardware

Label	Picture	Description	QTY
①		Bolt (M6X60mm)	5
②		Bolt (M6X40mm)	9
③		Screw	5
④		Cam Lock	5
⑤		Rubber Pad	3
⑥		Hole Plug	13
⑦		Allen Wrench	1
⑧		Screwdriver	1
⑨		Wooden Dowel	3

Assembly Preparation

Before Beginning Assembly:

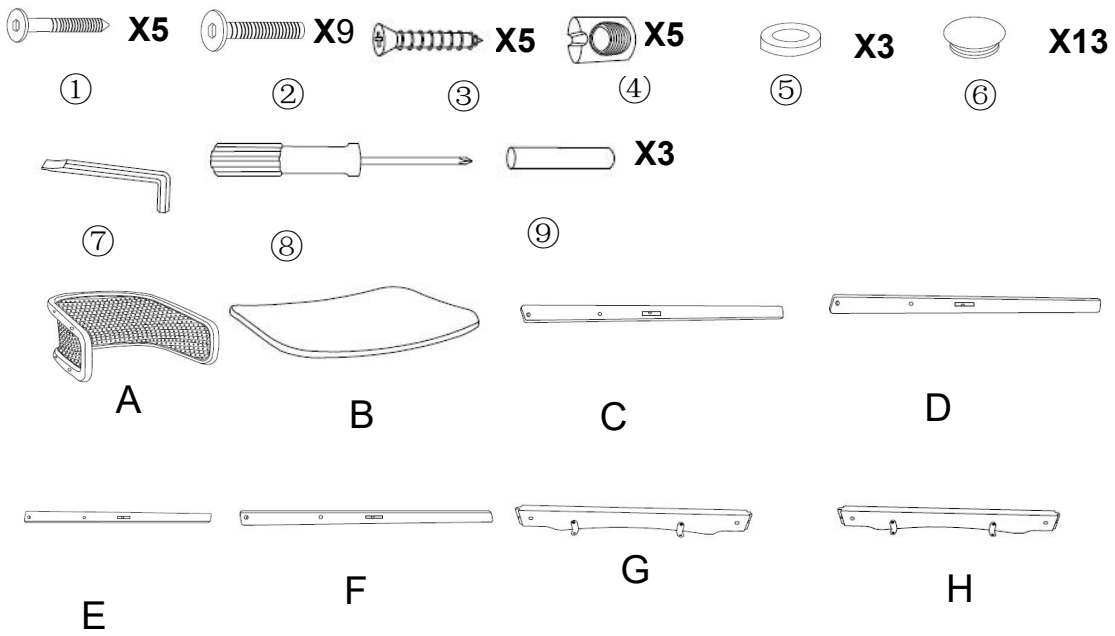

- Read instructions, cover to cover-
- Have 2 adults on hand for assembly-
- Do not assemble on flooring or carpet-
- Assemble on a clean non-marring surface (packing foam)-
- Save all packaging until finished-

Assembly Steps

Overview

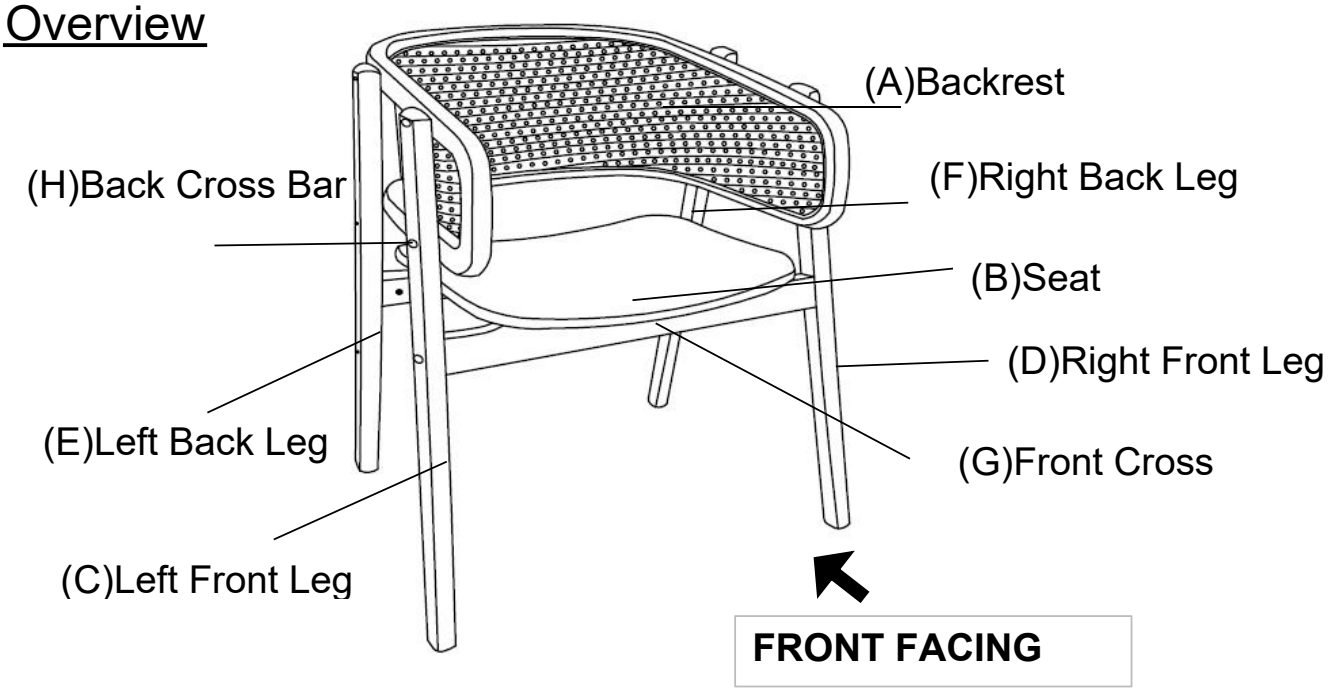

This Chair has multiple parts and may require up to 30 minutes to assemble. To give you an overview of the Chair parts, the above picture is provided to help you put the various parts into perspective. Please read through the instructions below to familiarise yourself with the parts and steps before assembly.
Friendly reminder: Tighten all the screws after all holes are installed.

Step 1

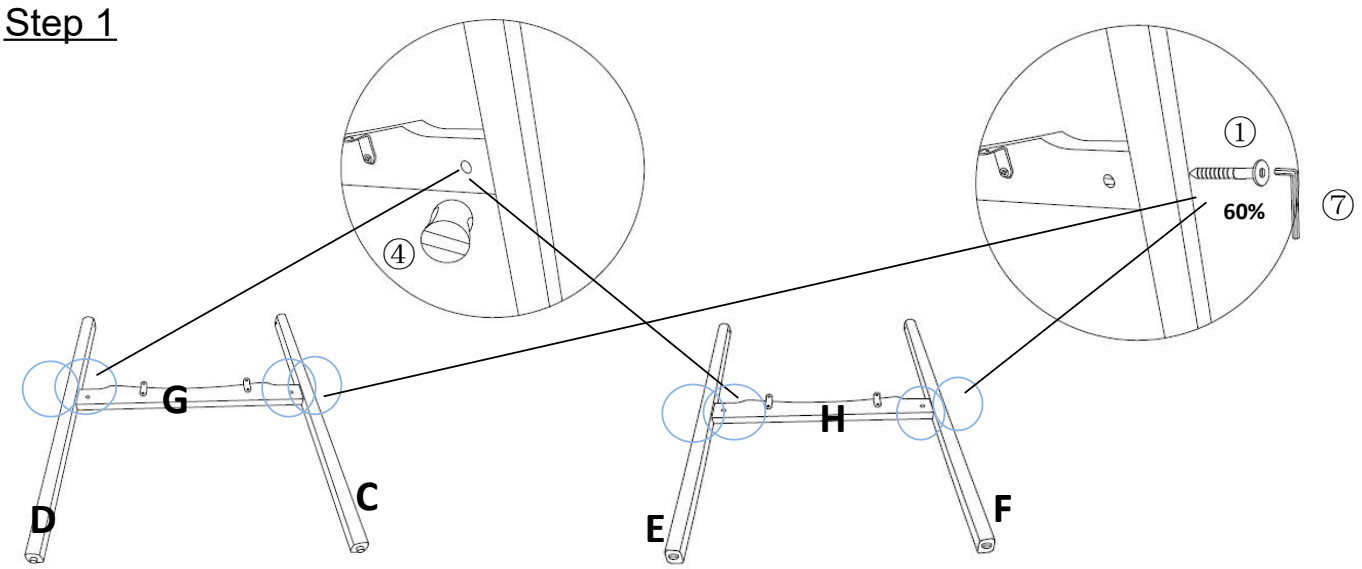

Open the carton, and place all parts on a clean, non-marring surface.
Take out Left Front Leg(C), Right Front Leg(D), Left Back Leg(E), Right Back Leg(F), Front Cross Bar(G), Back Cross Bar(H).
Connect Leg(D) and Leg(C) with Front Cross Bar(G) as shown. After the two components are joined, insert Cam Lock(④) into the exposed holes at both ends of Front Cross Bar(G). Then insert Bolt(①) into the holes on both ends of Legs, with Allen Wrench(⑦) to lock it.
Do not fully tighten the Bolts.
Then repeat the same step to install Leg(E) and Leg(F) with Back Cross Bar(H).

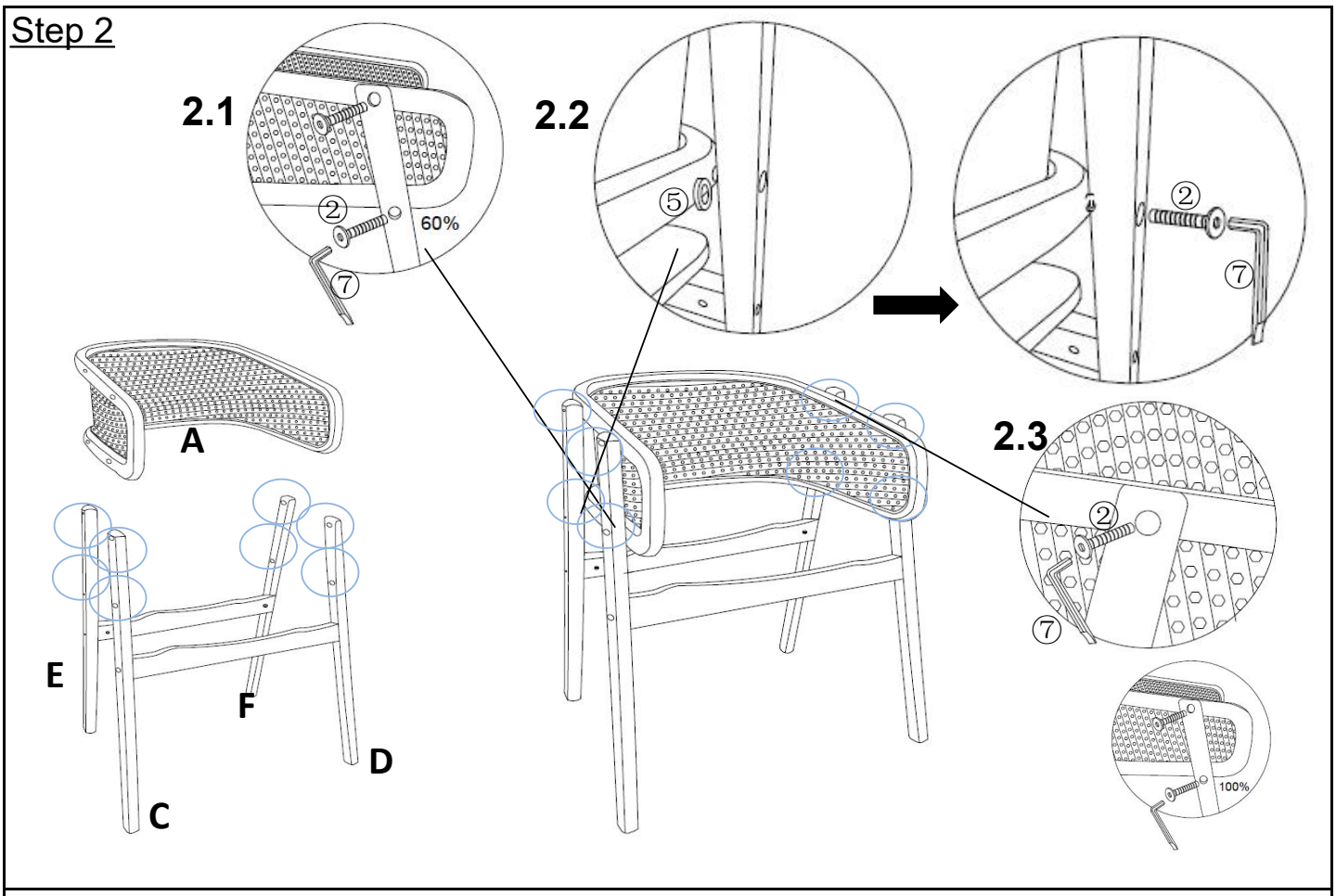

Take out Backrest(A)
Place the backrest as shown. Align the holes on the front legs with those on the armrests.

2.1)
Install the **lower row** first, use Bolt(②) with Allen Wrench(⑦) to lock it.
Do not fully tighten the Bolts.
Then install the **upper row**, use Bolt(②) with Allen Wrench(⑦) to lock it.
Do not fully tighten the Bolts.

2.2)
Insert Rubber Pad(⑤) into the **lower row** of holes at the joints where the back leg connect to the backrest. After inserting the rubber pads, align the holes again, Using Bolt(②) with Allen Wrench(⑦) to lock it.
Do not fully tighten the Bolts.

2.3)
Insert Bolt(②) into the **upper row** of the holes as shown with Allen Wrench(⑦) to lock it.
Fully tighten all the Bolts.

Step 3

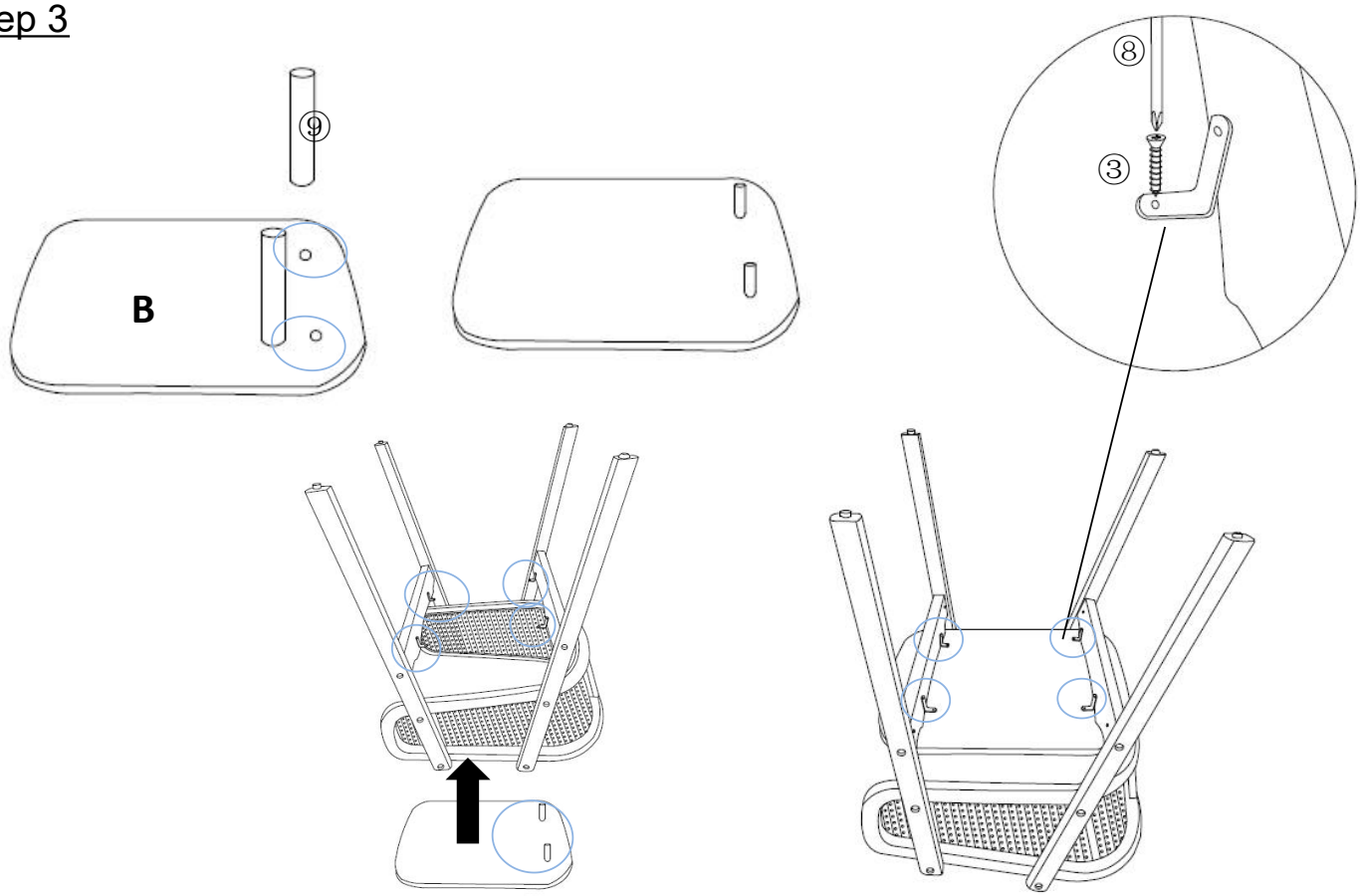

Take out Seat(B) and turn it over to the back side with two holes.
Insert the Wooden Dowel(⑨) into the holes
Align the top ends of the wooden dowels with the holes on Back Cross Bar(H).
Then insert Screw(③) into the holes on the protruding metal pieces between the two legs,and tighten them with screwdriver(⑧).

Step 4

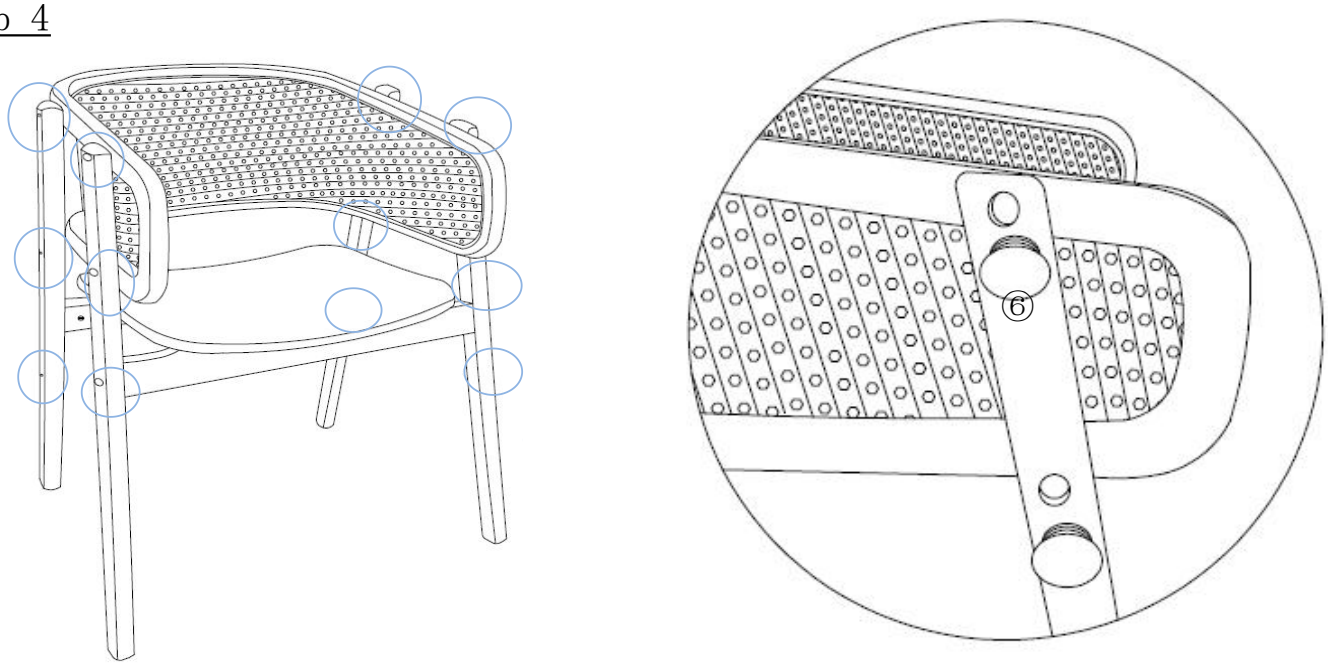

Take out Hole Plug(⑥)
Insert them into the 12 exposed holes on both sides, and press them firmly into place.

Step 5

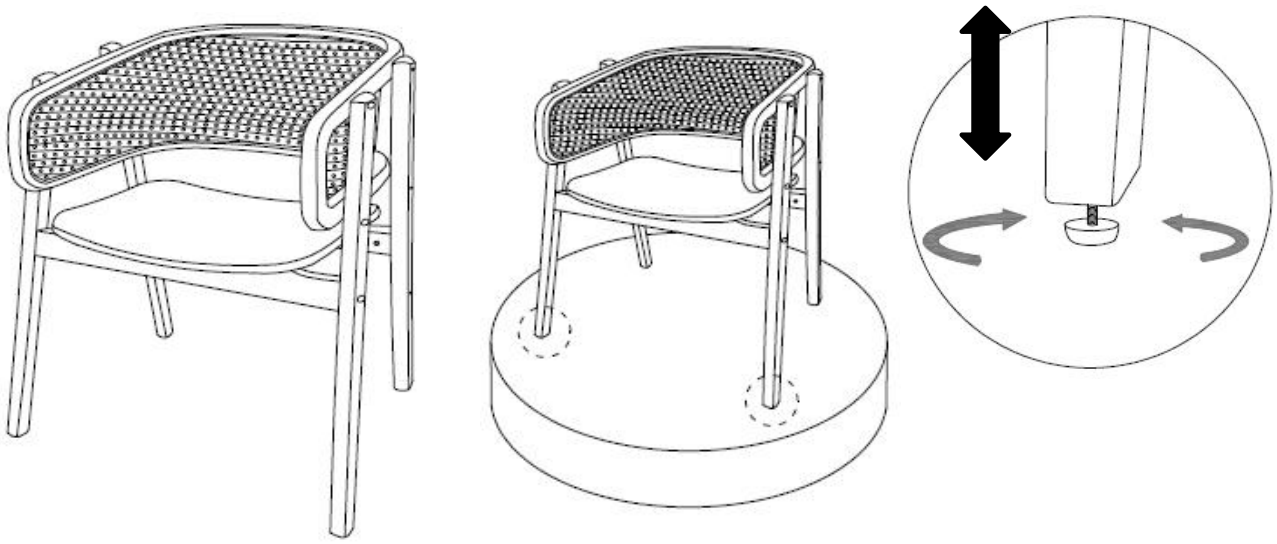

Place the Chair right side up and tested for stability.
Fully Tighten all the bolts.
Adjust the levelers on the legs to ensure chair stability.

Your Chair is ready for use.
This CHAIR can only be used on a flat, level surface.