Assembly Instructions

CAUTION: You must read these Assembly Instructions before you proceed.

Care & Maintenance

- Not for commercial use. For residential use only.
- Do not put hot items directly on furniture surface.
- Do not clean furniture with harsh cleansers or polish.
- To obtain the longest lifespan of your outdoor products, minimizing exposure to direct sunlight is recommended.
- Children should not climb or jump on the furniture.
- Do not write on furniture without a padded barrier to protect the surface.
- To obtain the longest lifespan of your outdoor products, avoid extended and lengthy exposure to rain, snow, and direct sunshine.
  Whenever possible cover the product and /or place under patio or awnings.
- Stains may be removed with mild soap solution and damp cloth.
- Keep away from sources of ignition.
- Dust and pick-up spills using a clean, non-colored, lint- free cloth.

Please look in Seat Panel for hardware packs

BAR CHAIR

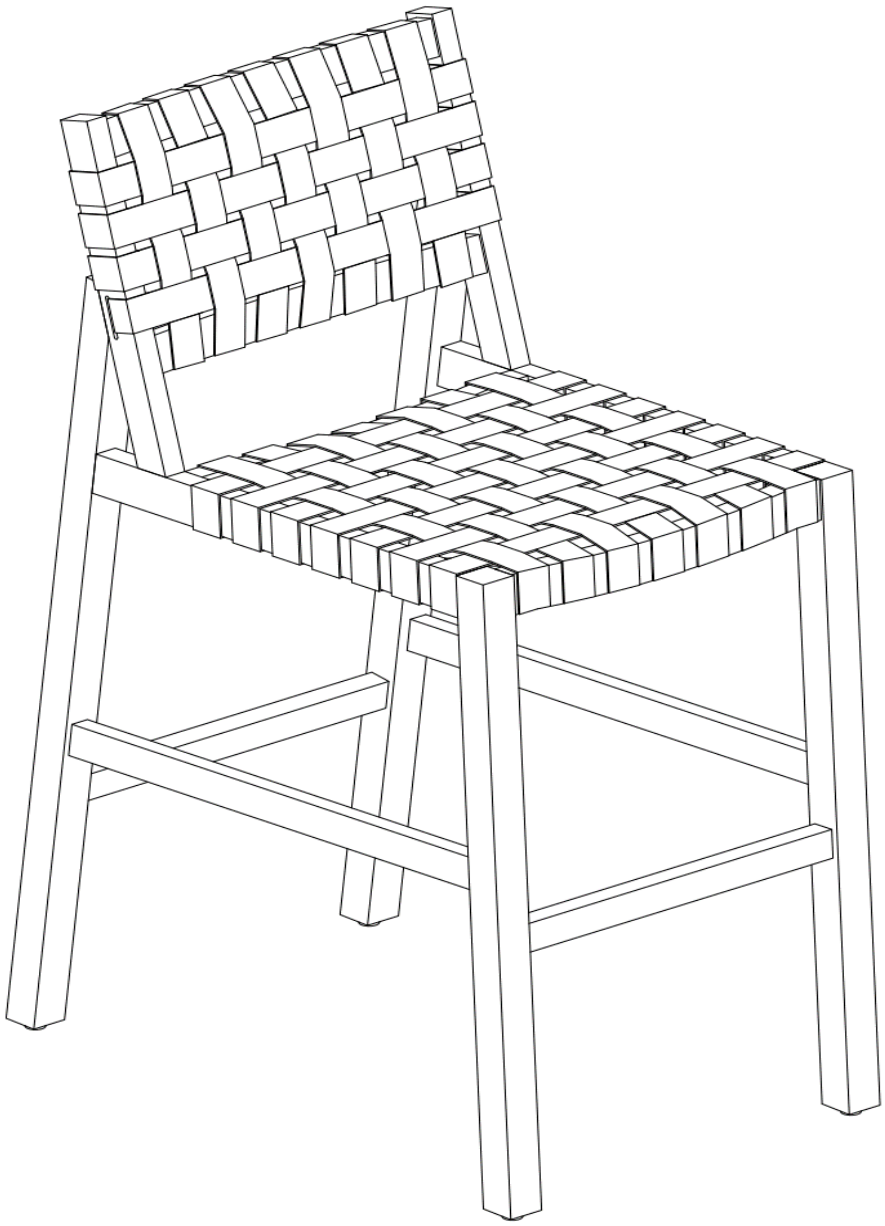

Parts List:

Label	Picture	Description	Qty
A	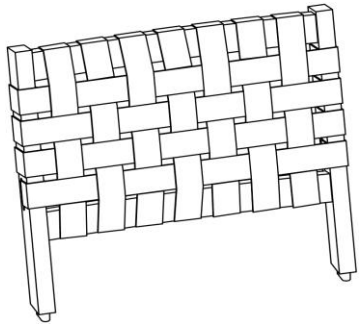	Backrest Panel	1
B	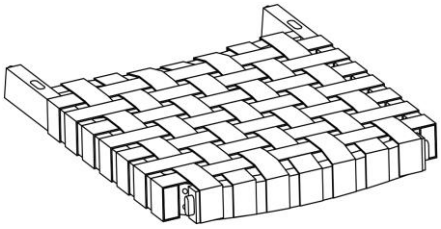	Seat Panel	1
C	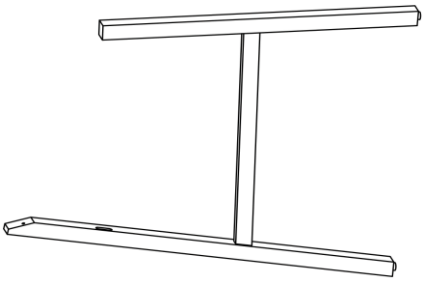	Left Leg Panel	1
D	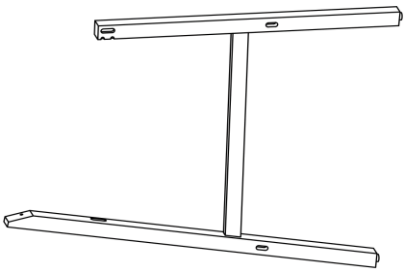	Right Leg Panel	1
E	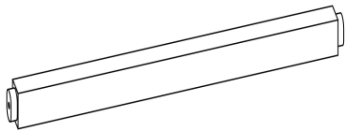	Footrest	1
F	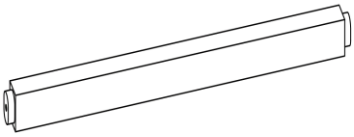	Back Support Bar	1

Hardware:

Label	Picture	Description	Qty
①	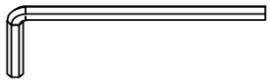	Allen Wrench	1
②		Bolt (M6x60mm)	5
③	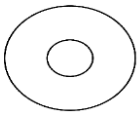	Washer (Ø7 x Ø16 x 2mm)	5
④	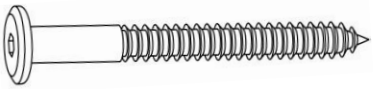	Screw (M6x80mm)	5
⑤	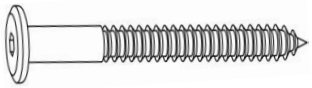	Screw (M6x60mm)	7

Assembly Preparation:

Before Beginning Assembly:

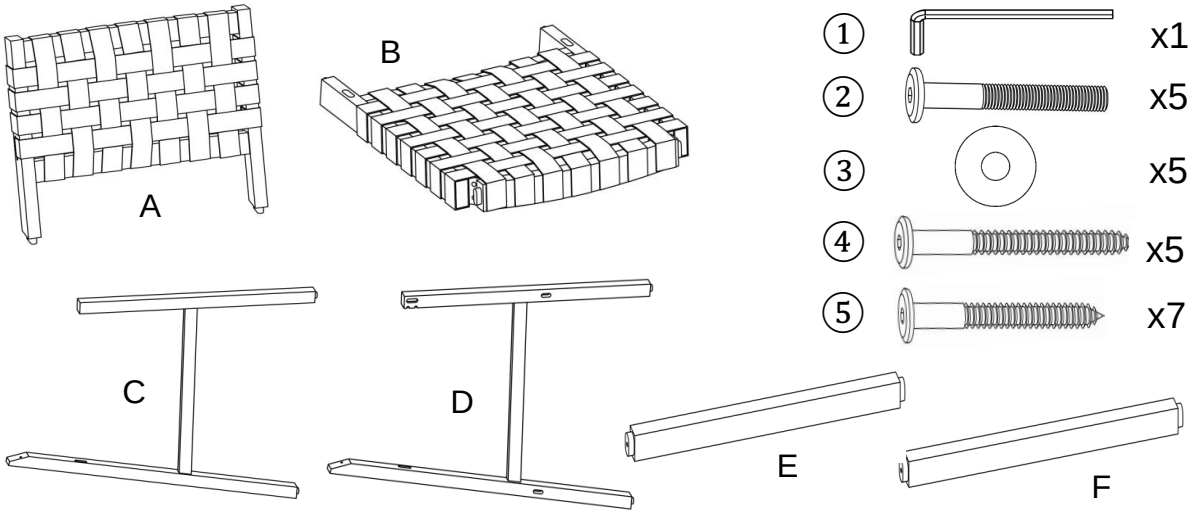

- Read instructions, cover to cover-
- Have 2 adults on hand for assembly-
- Do not assemble on flooring or carpet-
- Assemble on a clean non-marring surface (packing foam)-
- Save all packaging until finished-

Assembly Steps:

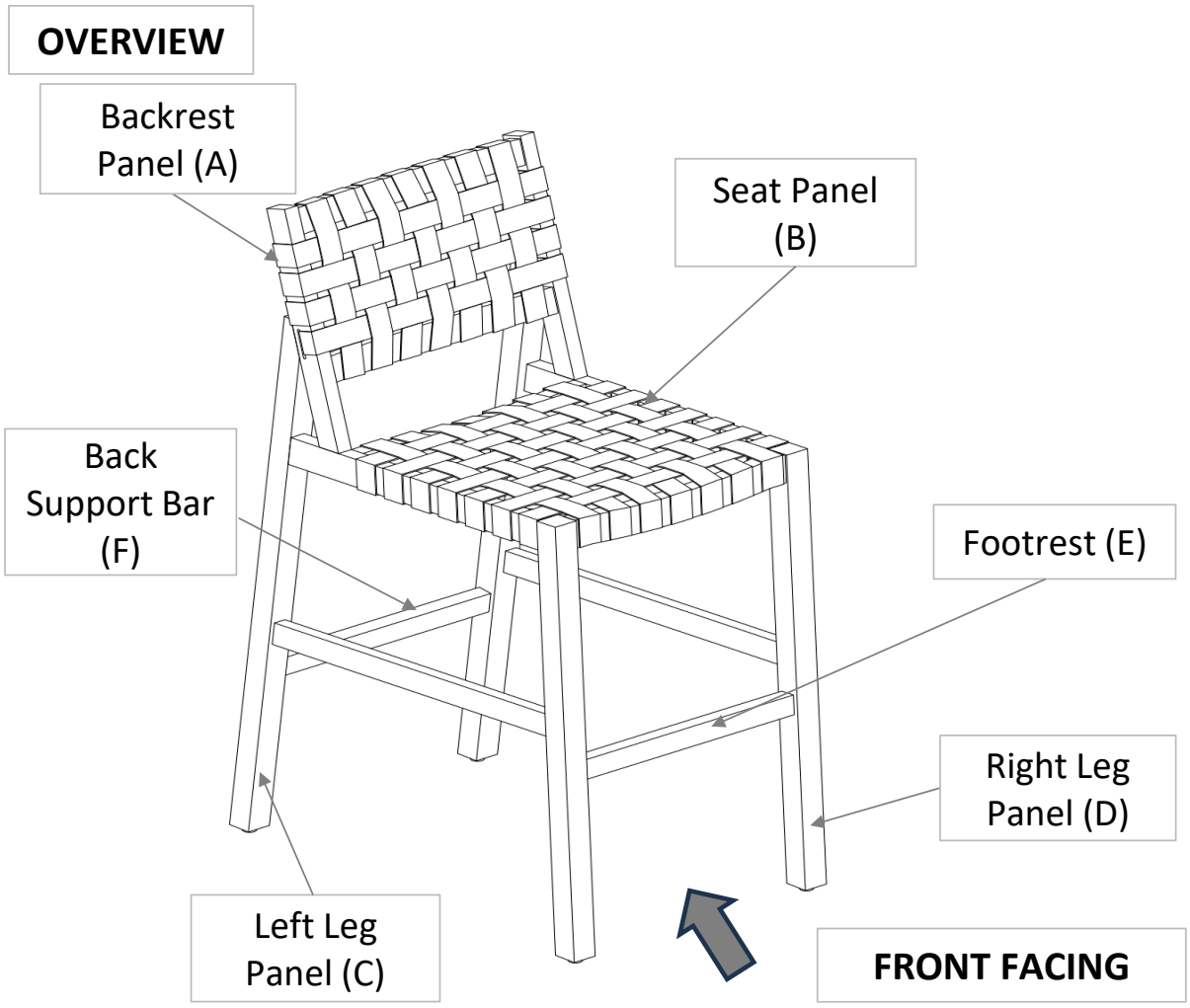

This Bar Chair has multiple parts and may require up to some 30 minutes to assemble. To give you an overview of the Bar Chair, the above picture is to help you put the various parts into perspective. Please read through the instructions here below to familiarise yourself with the parts and steps before assembly.

Step 1

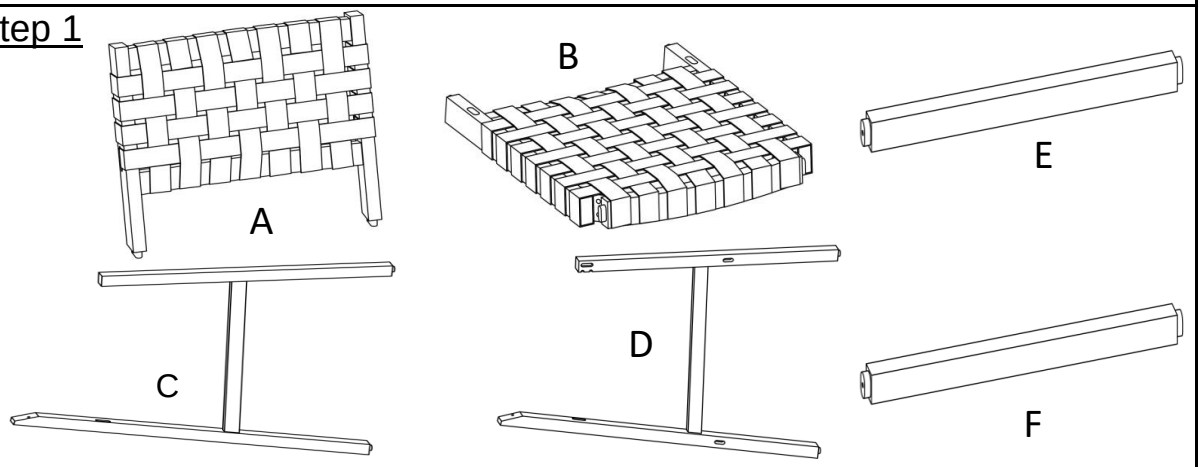

Unpack and place all parts on a clean, non-marring surface.

Step 2

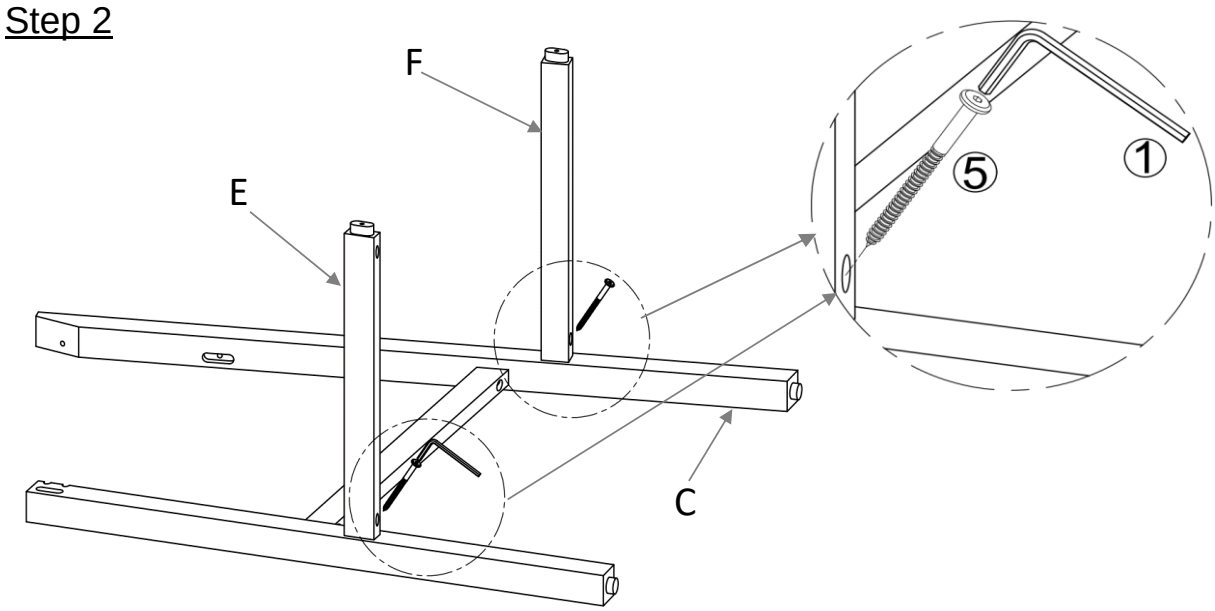

With assistance from your adult partner, place Left Leg Panel (C) facing down then attach Footrest (E) and Back Support Bar (F) to Left Leg Panel (C) and secure by using Screws (⑤) with Allen Wrench (①) as shown above.

<u>Do not</u> fully tighten the Screws.

Step 3

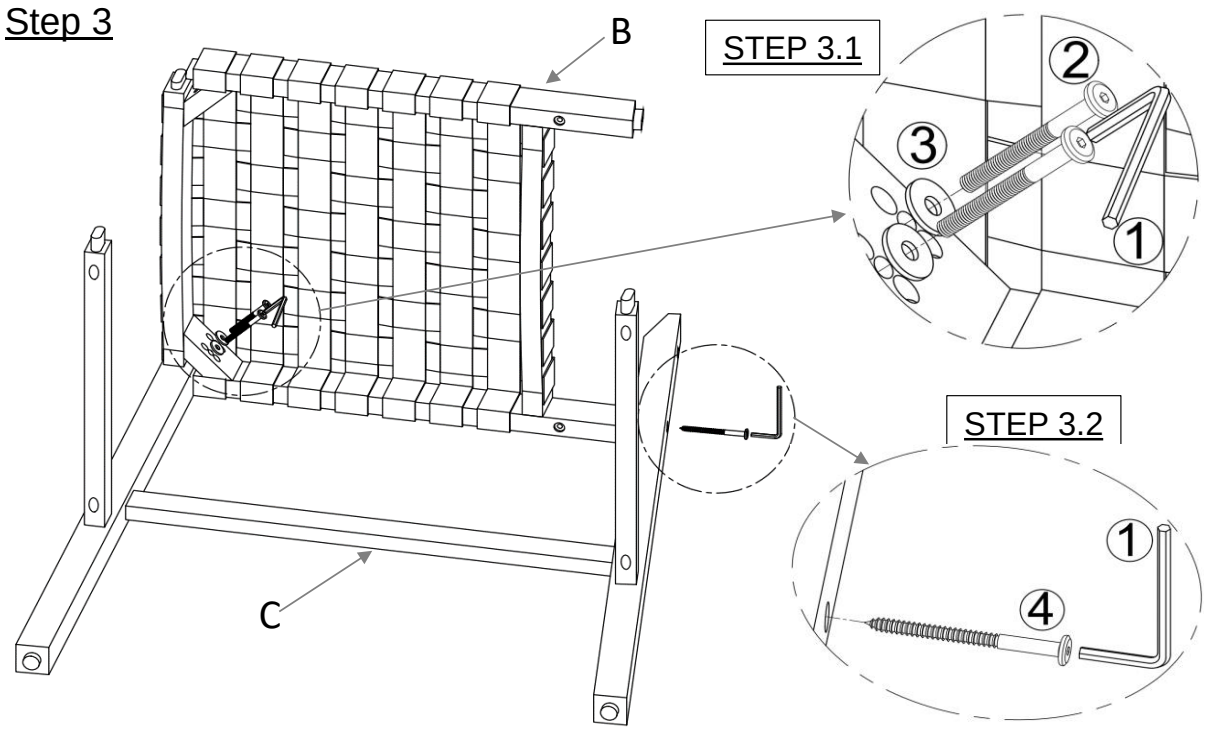

With assistance from your adult partner, attach Seat Panel (B) to Left Leg Panel (C) of the assembled part in Step 2 as shown above. Then:

Step 3.1, secure Seat Panel (B) to Left Leg Panel (C) by using Bolts (②), Washers (③) and Allen Wrench (①).

Step 3.2, secure Seat Panel (B) to Left Leg Panel (C) by using Screw (④) and Allen Wrench (①).

<u>Do not</u> fully tighten the Screw and the Bolts.

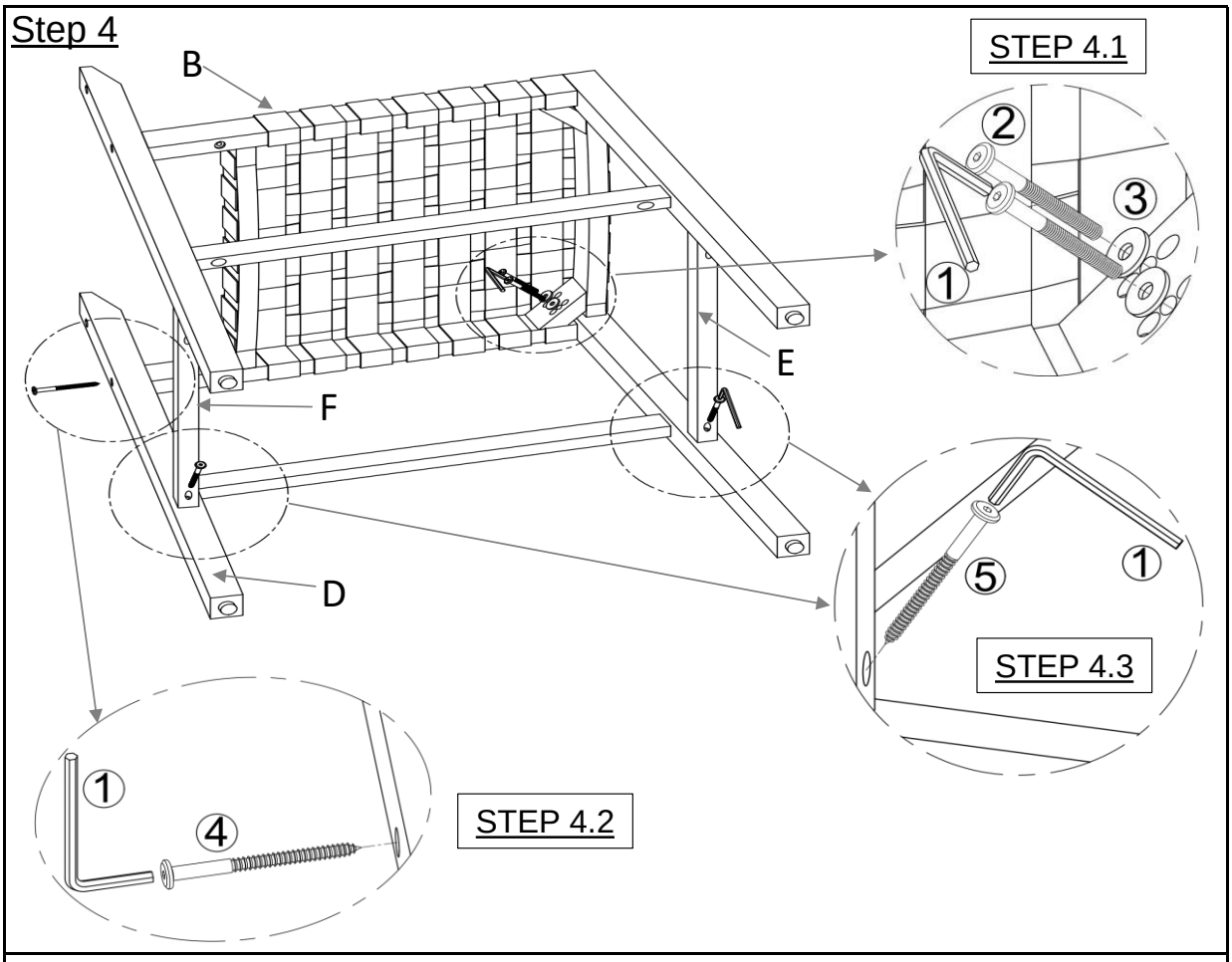

Place Right Leg Panel (D) facing down and then with assistance from your adult partner, attach the assembled part in Step 3 to Right Leg Panel (D) as shown above. Then:

Step 4.1, secure Right Leg Panel (D) to Seat Panel (B) by using Bolts (②), Washers (③) and Allen Wrench (①).

Step 4.2, secure Right Leg Panel (D) to Seat Panel (B) by using Screw (④) and Allen Wrench (①).

Step 4.3, secure Right Leg Panel (D) to Footrest (E) and Back Support Bar (F) by using Screws (⑤) with Allen Wrench (①).

<u>Do not</u> fully tighten the Screws and the Bolts.

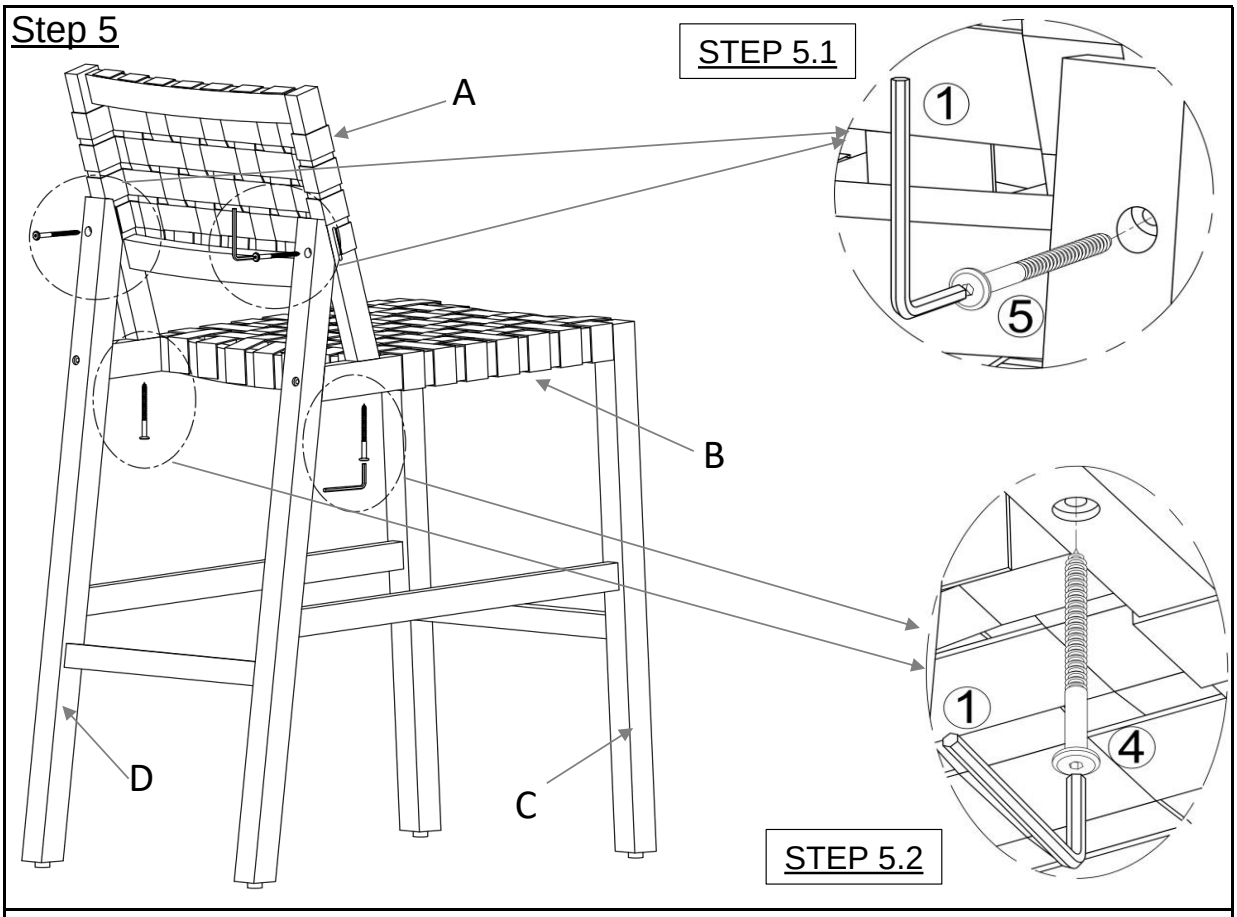

With assistance from your adult partner, turn the assembled part in Step 4 right side up and position Backrest Panel (A) to both Seat Panel (B) and Leg Panels (C, D) as shown above. Then:

Step 5.1, secure Backrest Panel (A) to Leg Panels (C, D) by using Screws (⑤) and Allen Wrench (①).

Step 5.2, secure Backrest Panel (A) to Seat Panel (B) by using Screws (④) and Allen Wrench (①).

<u>Do not</u> fully tighten the Screws.

Step 6

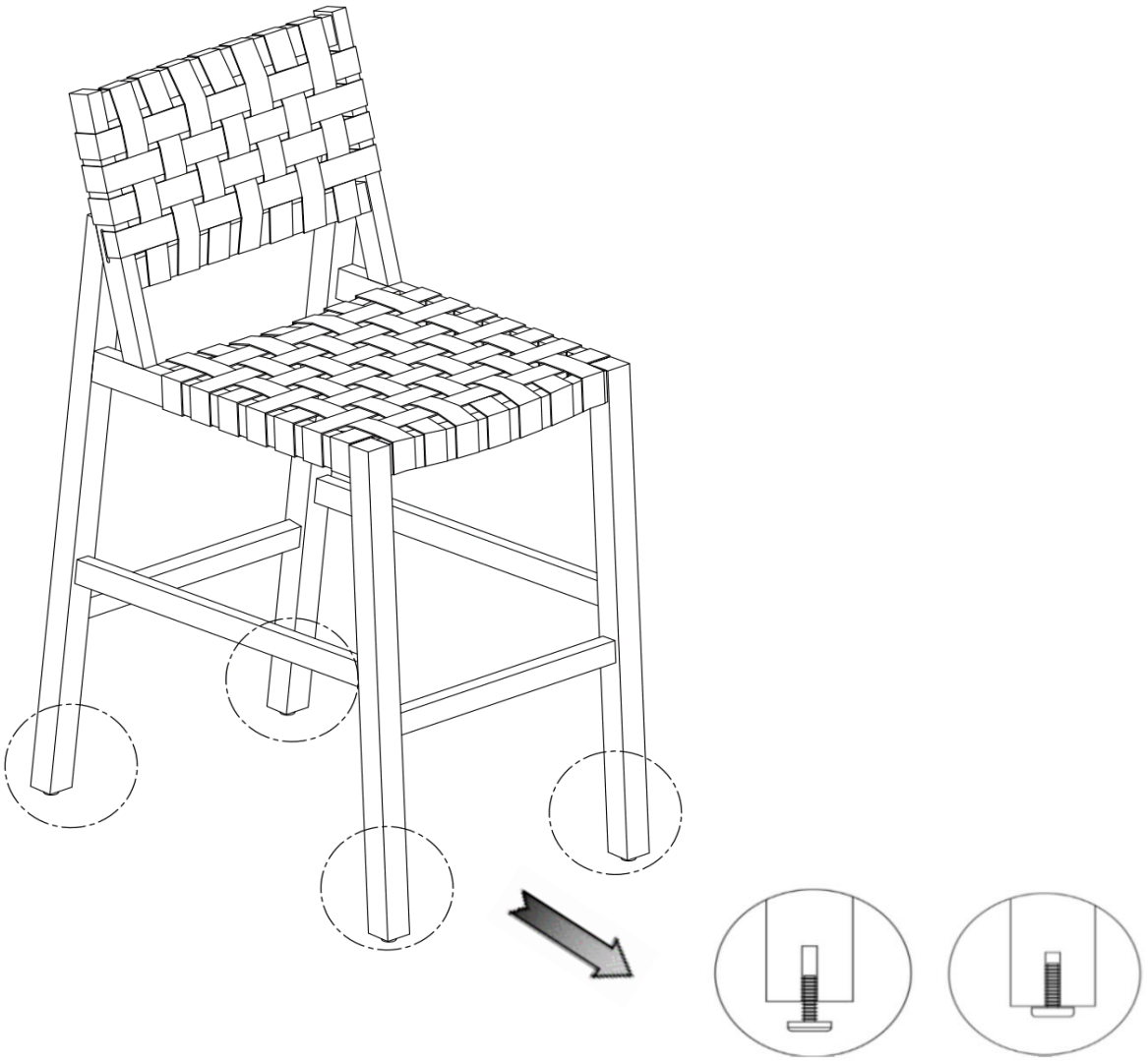

Adjust Pre-installed Levelers height for balance

Inspect it and make sure all parts are adequately connected.
Stand the Chair right side up.
Then proceed to tighten the Bolts and Screws in a sequential manner.
When tightening the Bolts and Screws, tighten sequentially.
DO NOT tighten any Bolts, Screws fully and then move on towards the next one.
If there are still wobbles, loosen the Bolts, Screws and execute this same process.
Adjust Pre-installed Levelers height for balance.
Your Chair is ready to use.
This Chair can only be used on a flat, level surface.