Assembly Instruction

Item：GM-S04

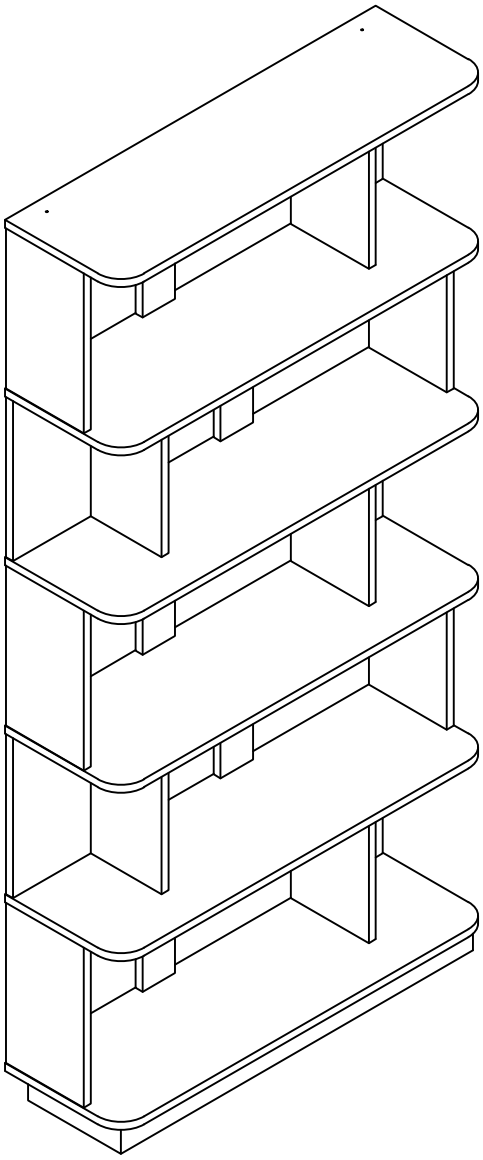

MADE IN CHINA

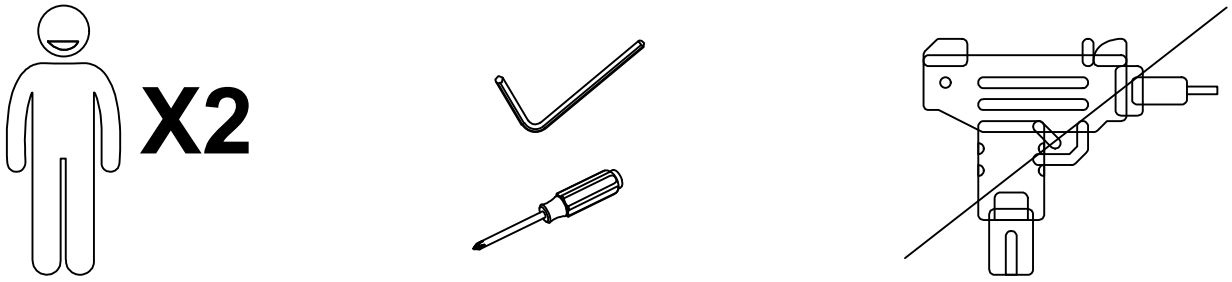

We recommend using hand tools for assembly.

If an electric screwdriver is used, reduce power and torque to avoid damage to the product.

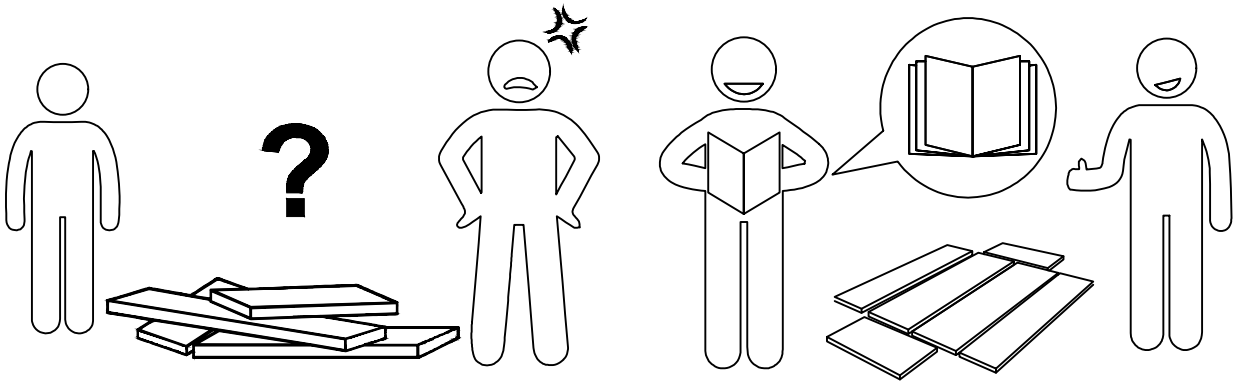

Install the Anti-Tip Straps

Using the anti-tip straps can reduce the risk of tipping over but can not eliminate it.

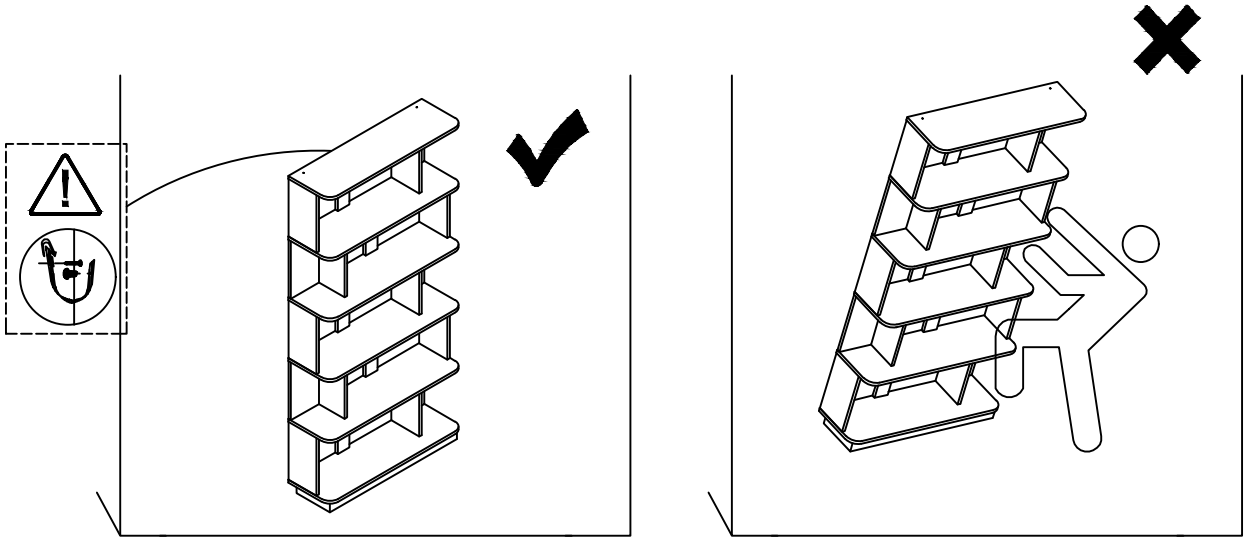

MADE IN CHINA

Installation of Cams and Pins

Screw the pin into the hole. To set the cams correctly, ensure that the arrow on the cam is opening to the hole of the pin it is locking. Lock the cam by turning the cam head with a screwdriver until it is tightened. Please do not use an electric screwdriver to assemble the unit.

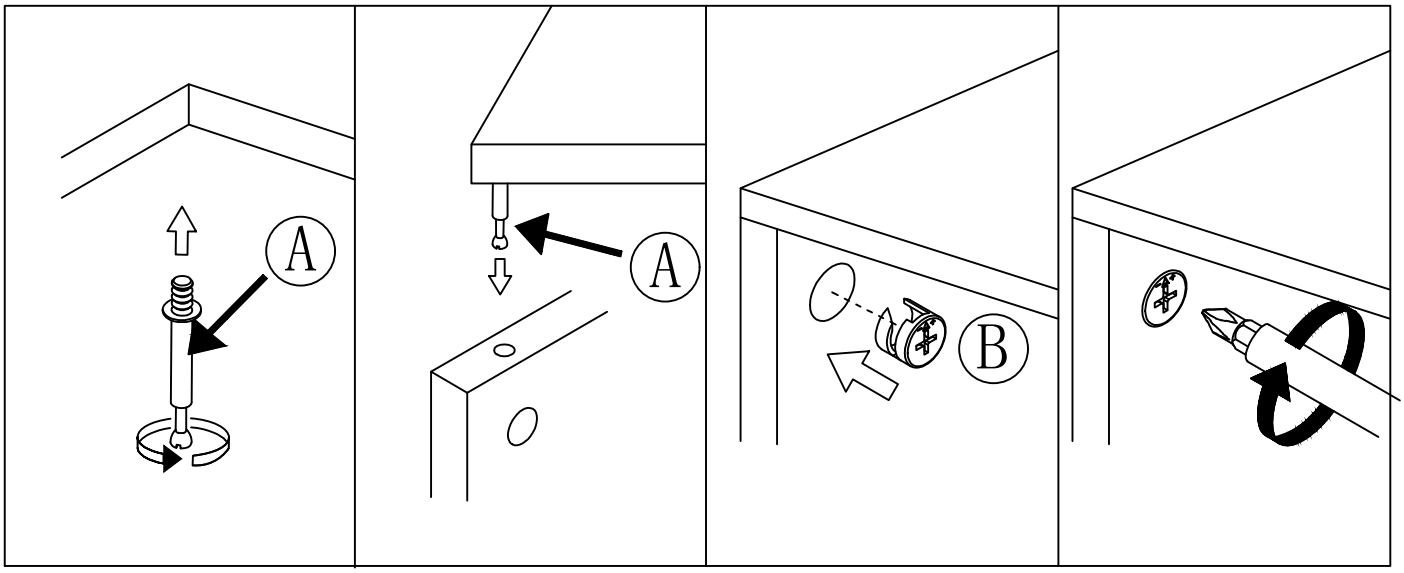

Read each step carefully before starting. It is very important that each step of instruction is performed in the correct order. If these steps are not followed in sequence, assembly difficulties will occur.

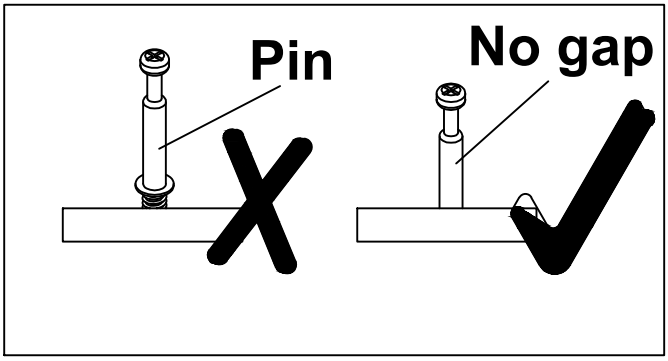

ASSEMBLY INSTRUCTION

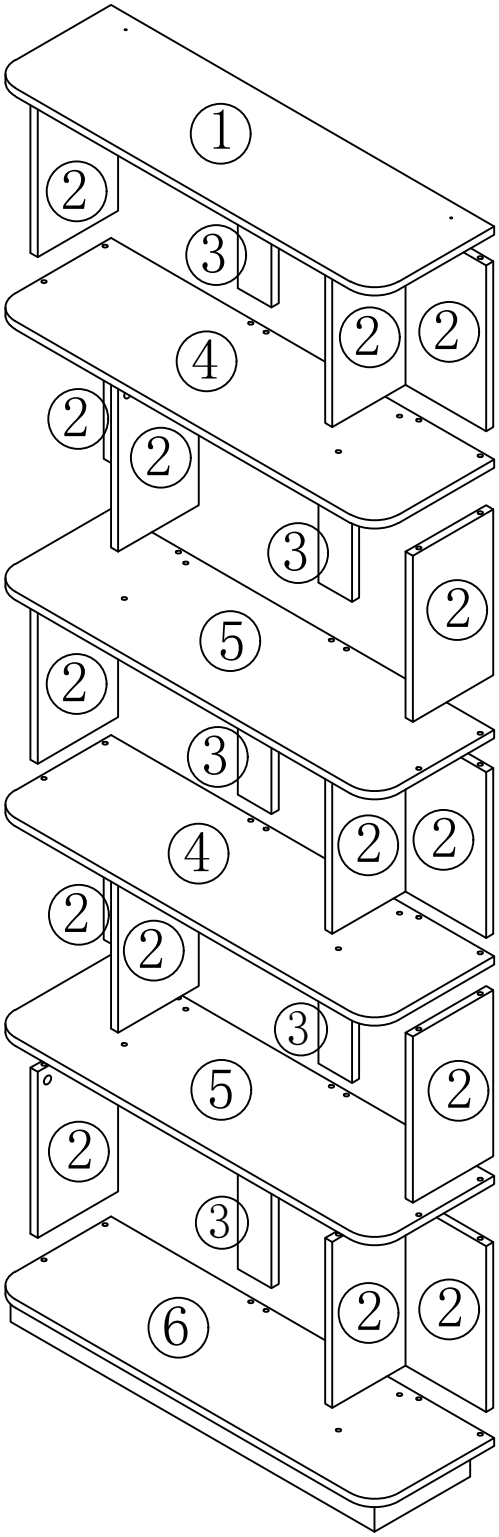

MADE IN CHINA

Part List

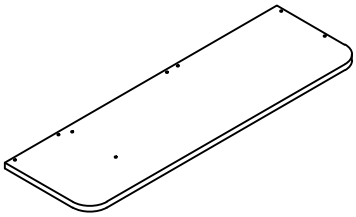 ①1pc	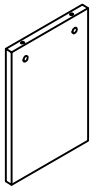 ②15pcs	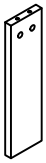 ③5pcs	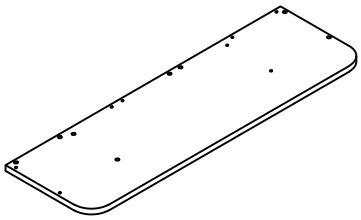 ④2pcs
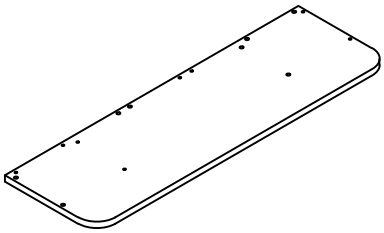 ⑤2pcs	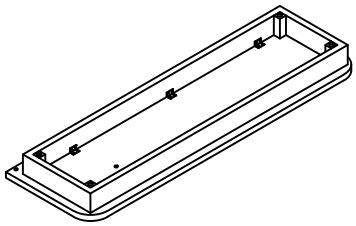 ⑥1pc		

Hardware List

Ø6x32mm 40+4spare A	Ø15x10mm 40+4spare B	M6x50mm 40+4spare C
1pc D	Ø20mm 40+4spare E	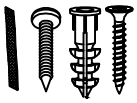 2sets F

MADE IN CHINA

STEP 1

A:		8PCS
B:		8PCS

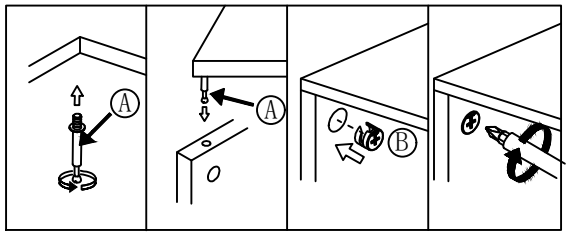

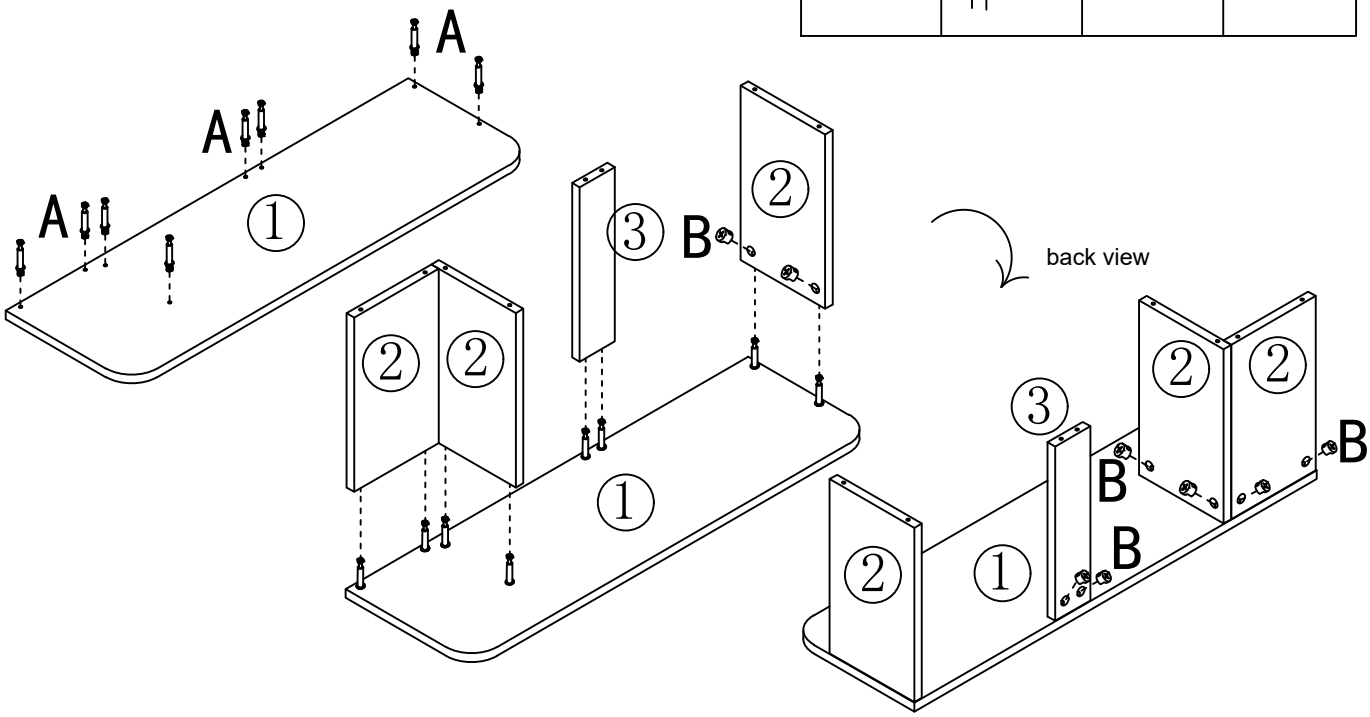

STEP 2

C:		8PCS
D:		1PC

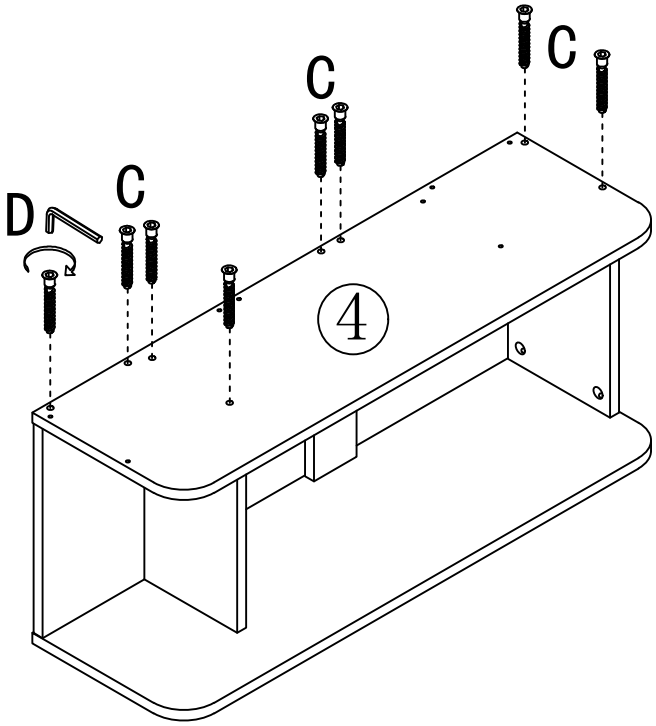

MADE IN CHINA

STEP 3

A:		8PCS
B:		8PCS

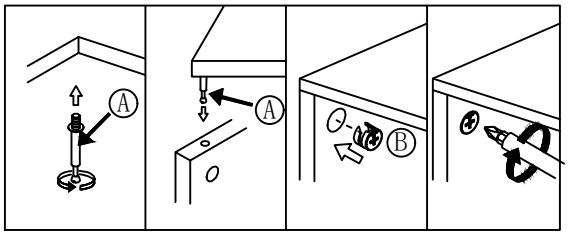

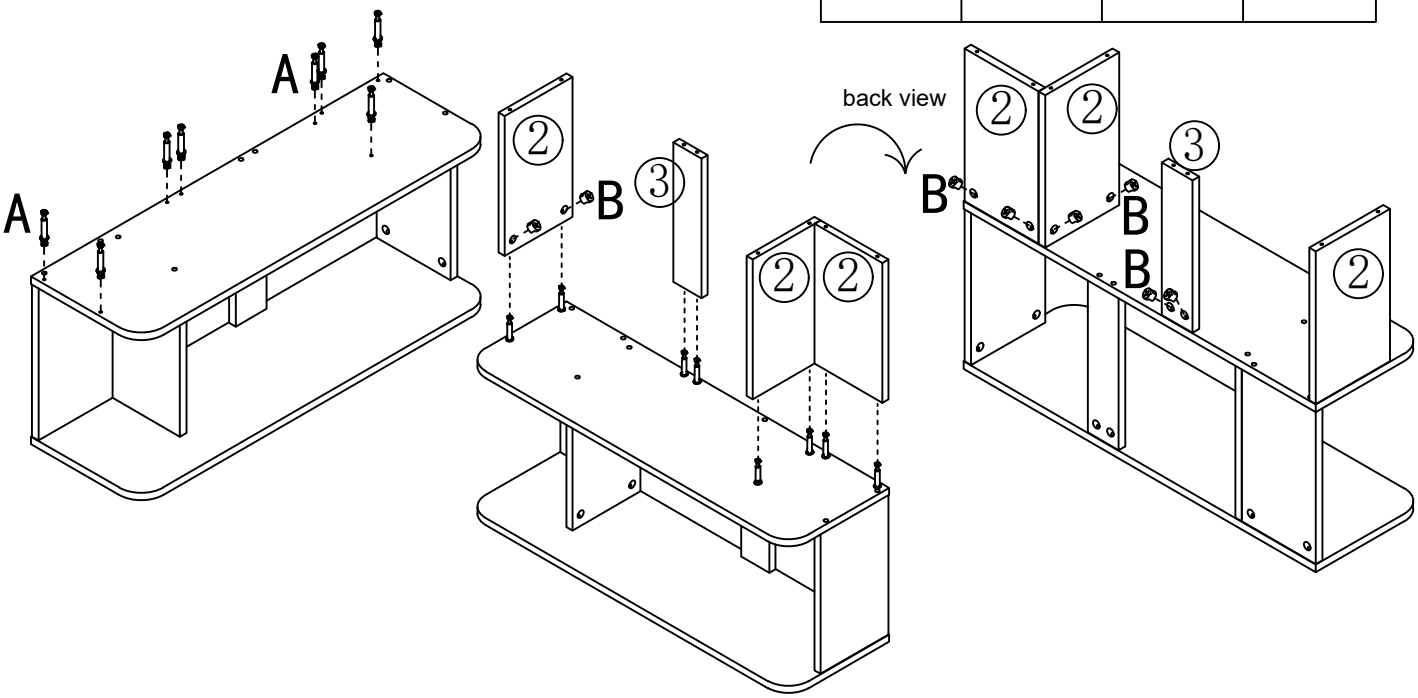

STEP 4

C:		8PCS

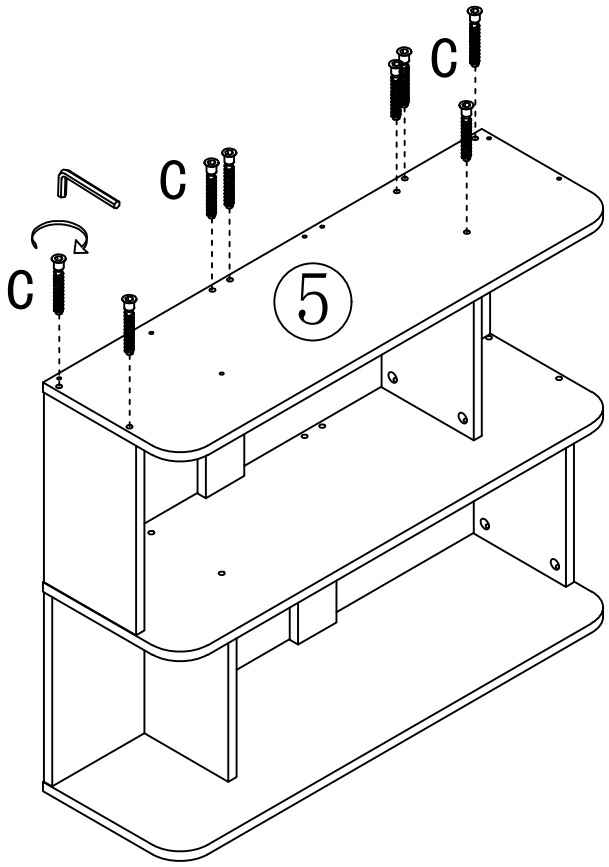

MADE IN CHINA

STEP 5

A:		8PCS
B:		8PCS

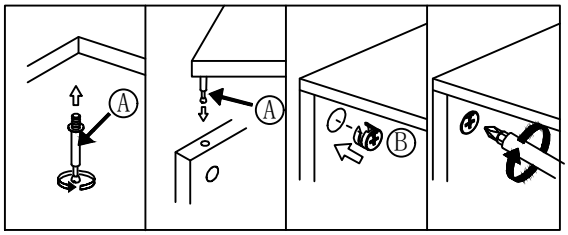

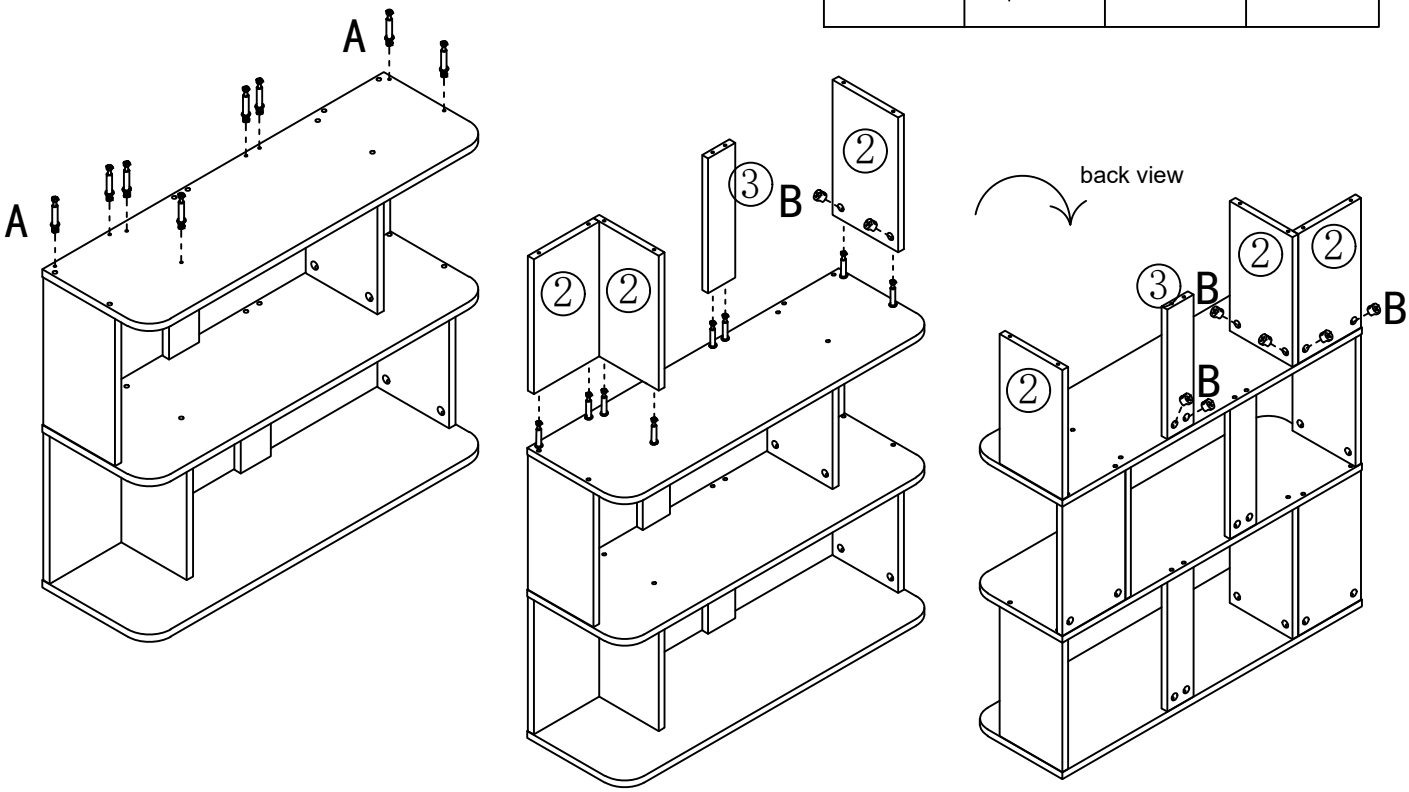

STEP 6

C:		8PCS

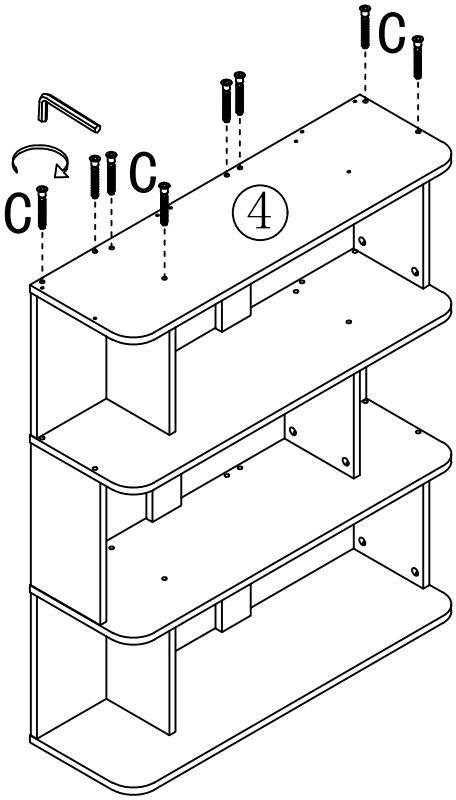

MADE IN CHINA

STEP 7

A:		8PCS
B:		8PCS

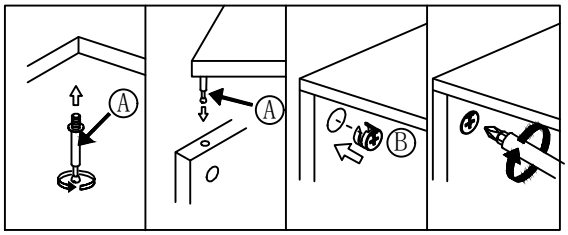

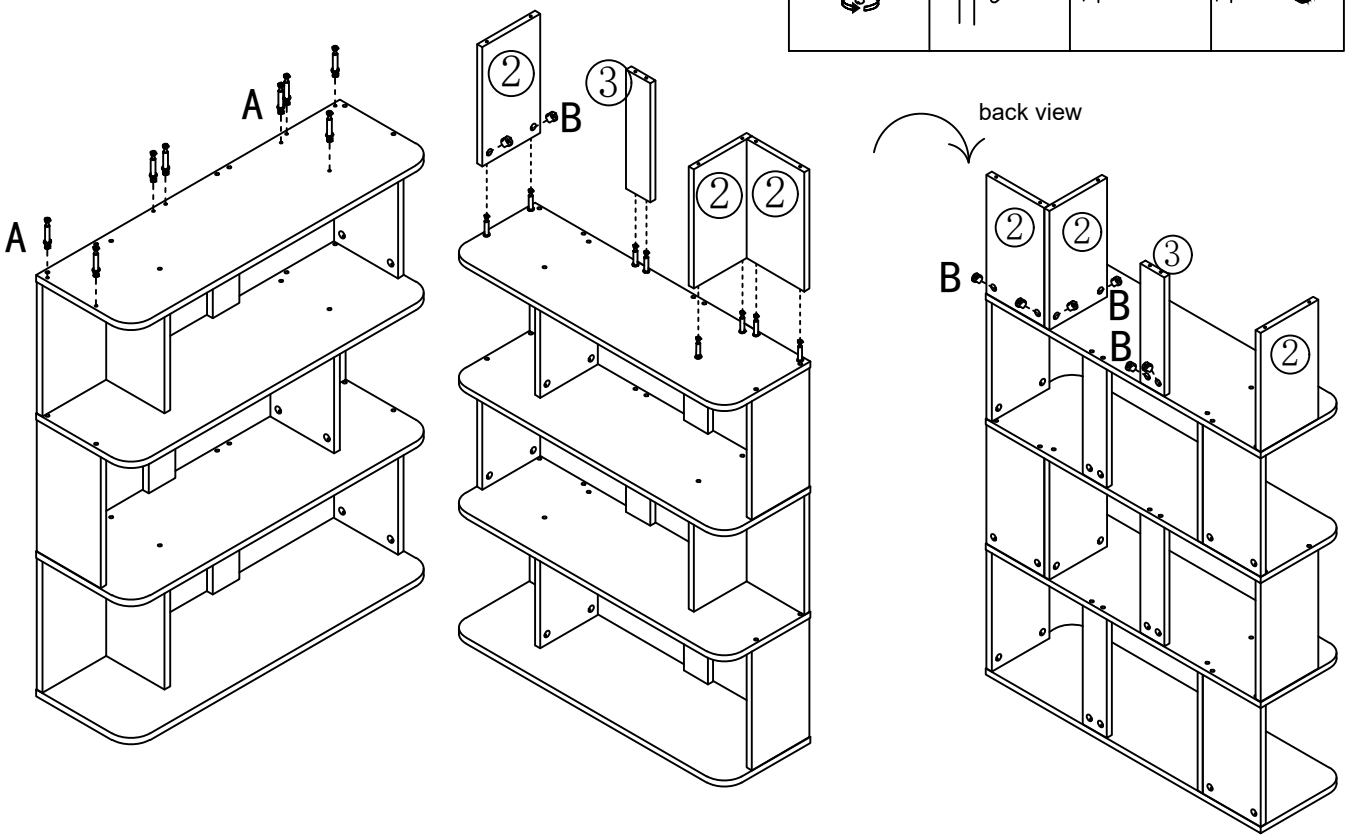

STEP 8

C:		8PCS

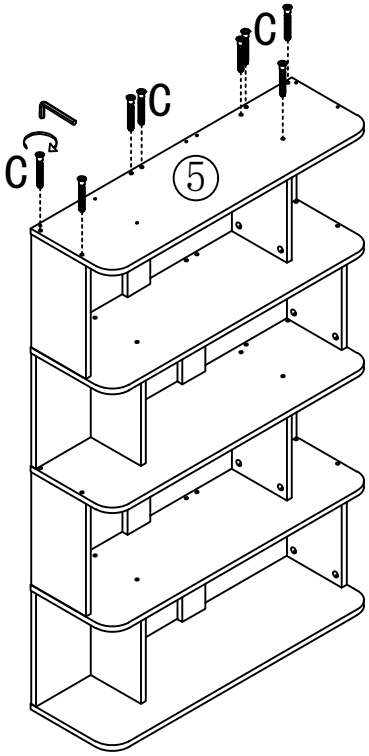

MADE IN CHINA

STEP 9

A:		8PCS
B:		8PCS

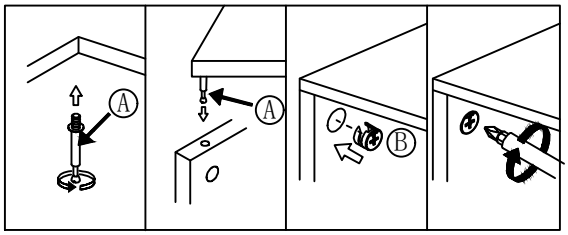

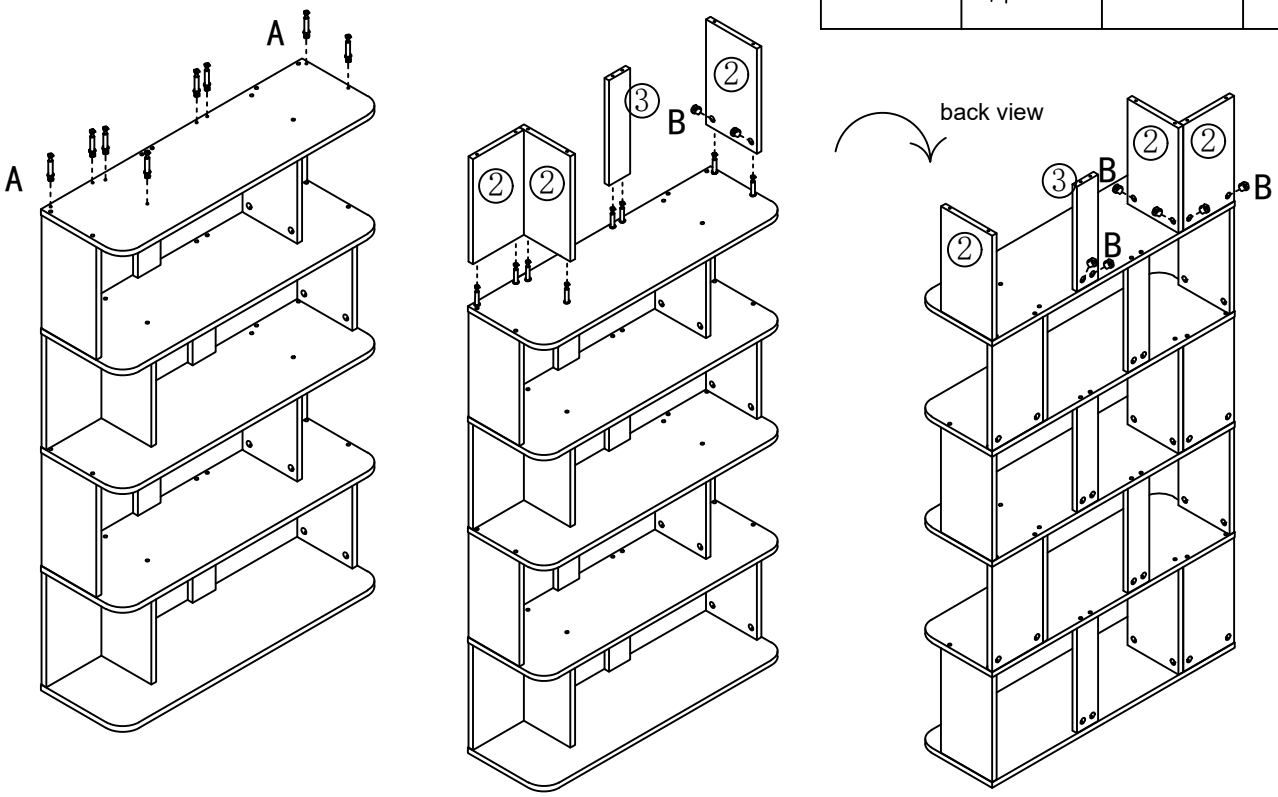

STEP 10

C:		8PCS

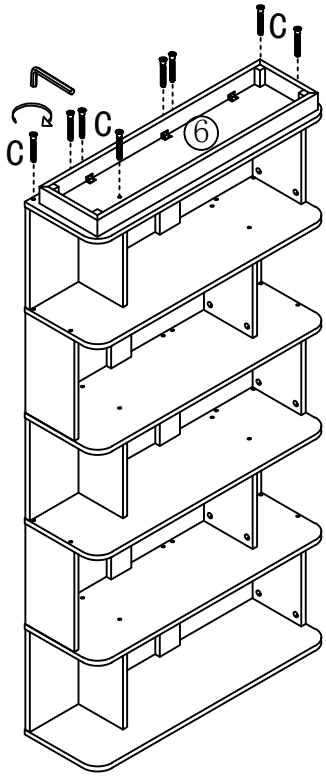

MADE IN CHINA

STEP 11

E: 40PCS

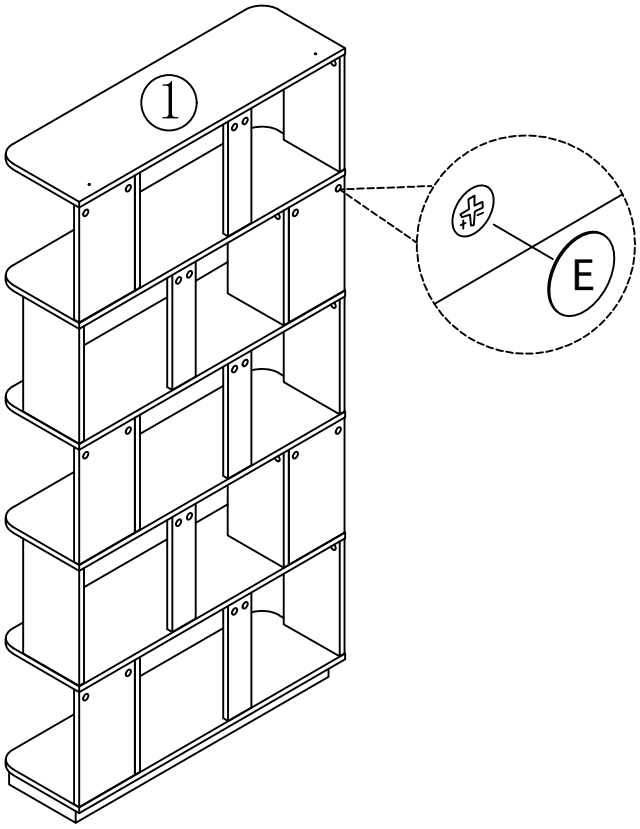

STEP 12

F: 2SET

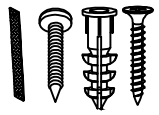

If it is a solid wall, please use expansion and self-tapping screws, if it is a wooden wall, only use self-tapping screws, please do not overtighten the screws

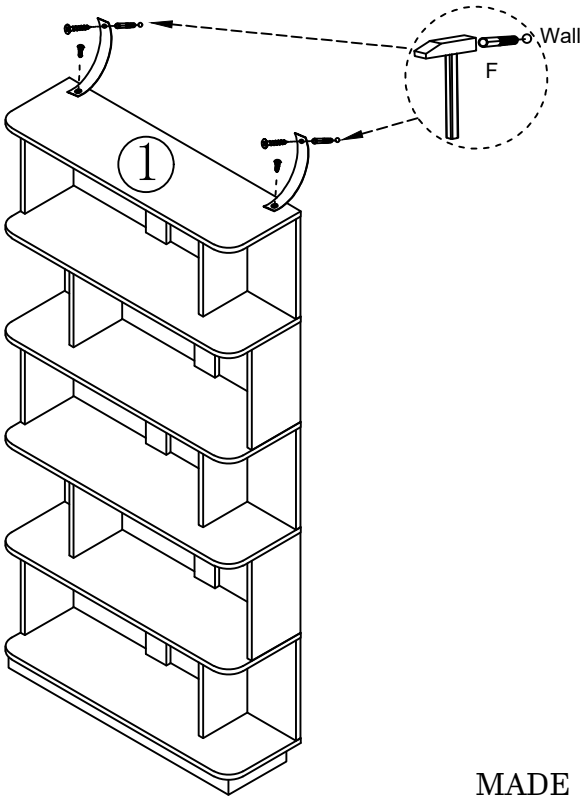

MADE IN CHINA