ASSEMBLY INSTRUCTION

ITEM NO.:N707P370281

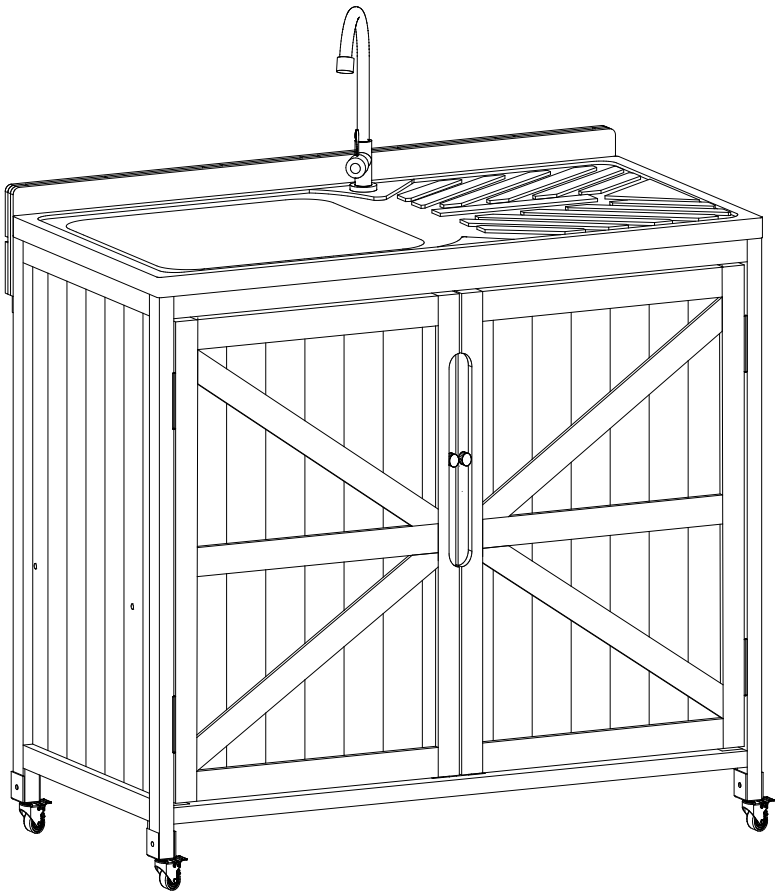

IMPORTANT NOTE:

① PLACE ALL PARTS ON A CLEAN AND SMOOTH SURFACE SUCH AS A RUG OR CARPET TO AVOID THE PARTS FROM BEING SCRATCHED.

② BEFORE YOU BEGIN,KINDLY FOLLOW THE ASSEBLY INSTRUCTIONS STEP BY STEP.

③ DO NOT TIGHTEN ALL SCREWS AND BOLTS UNTIL THIS ITEM IS FULLY SET-UP.

Detail View

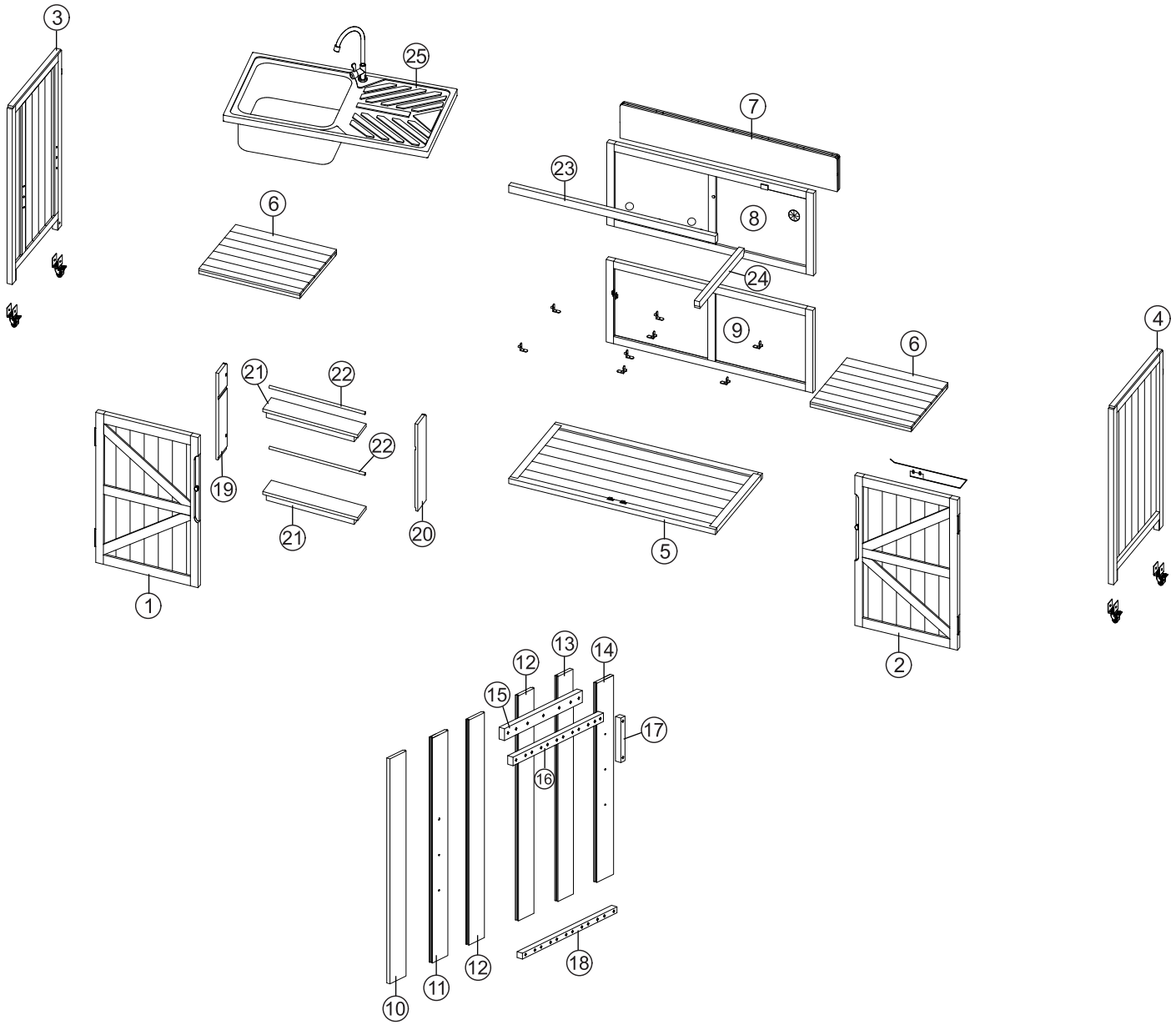

N707P370281

1 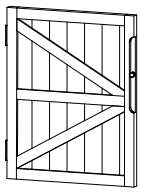	2 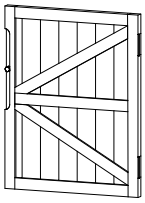	3 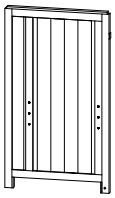	4 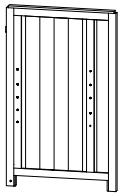
1x	1x	1x	1x
5 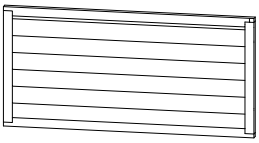	6 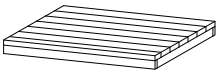	7	8 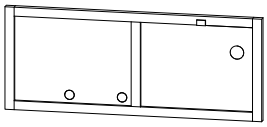
1x	2x	1x	1x
9 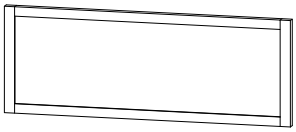	10	11 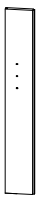	12
1x	1x	1x	2x
13 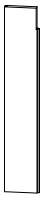	14	15 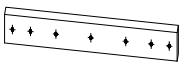	16 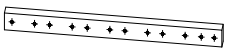
1x	1x	1x	1x
17	18	19	20
1x	1x	1x	1x
21	22	23	24
2x	2x	1x	1x
25	26	27	28
1x	1x	1x	1x
29			
1x			

Hardware List

A ∅3.5*45	B ∅ 3.5*40	C ∅3.5*30	D ∅ 3.5*35
19x	5x	5x	2x
E ∅3.0*20	F ∅ 3.0*30	G ∅ 3.0*14	H ∅3.0*12
8x	21x	20x	4x

I ∅3.0*25	J	K	L	M
12x	22x	8x	1x	4x

N	O	P
4x	1x	2x

ASSEMBLY TOOLS REQUIRED(NOT INCLUDED)

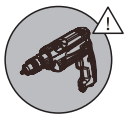

PLEASE BE CAREFUL DO NOT DAMAGE THE HOLE POSITION WHEN YOU USE POWERTOOLS !

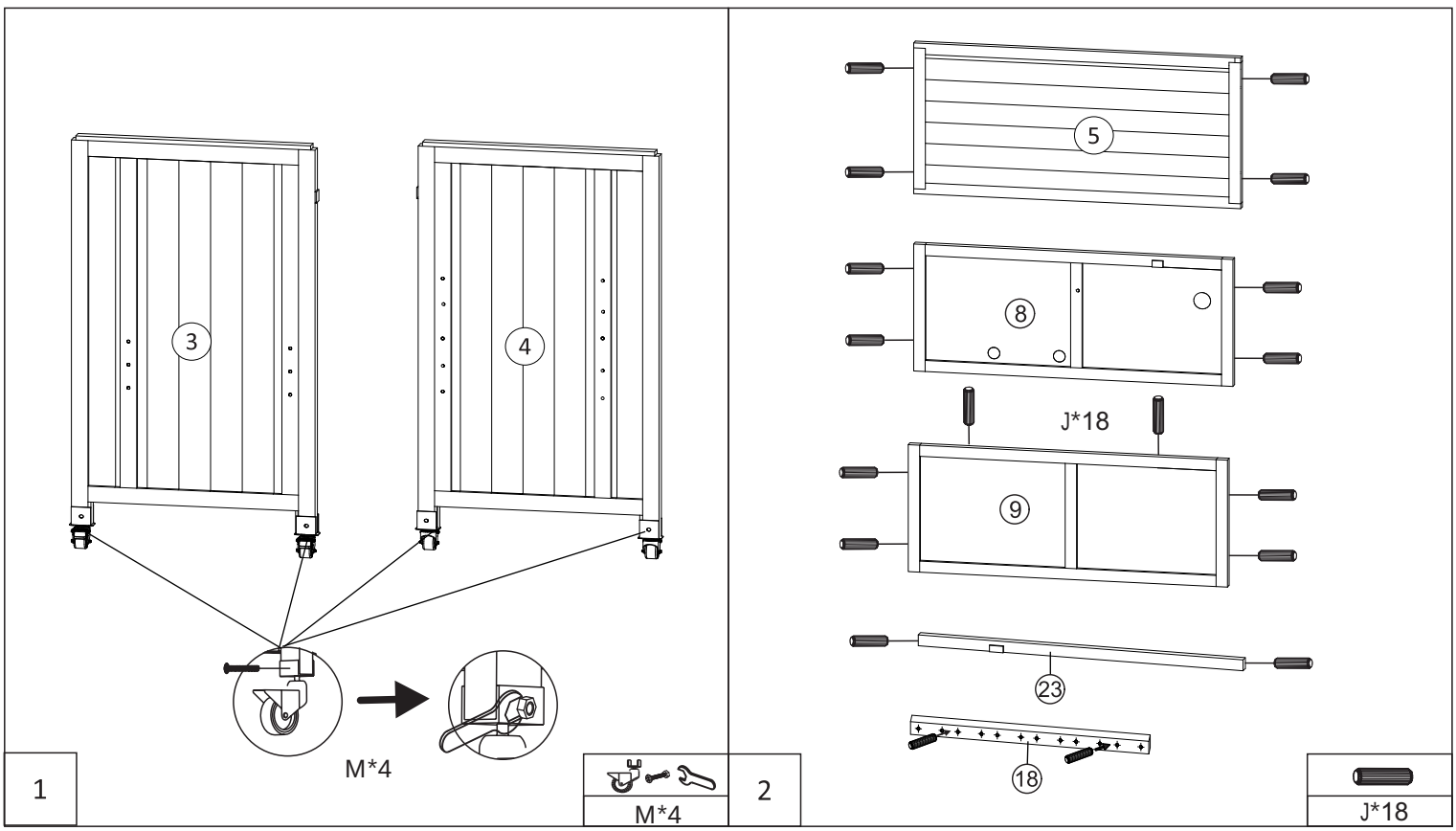

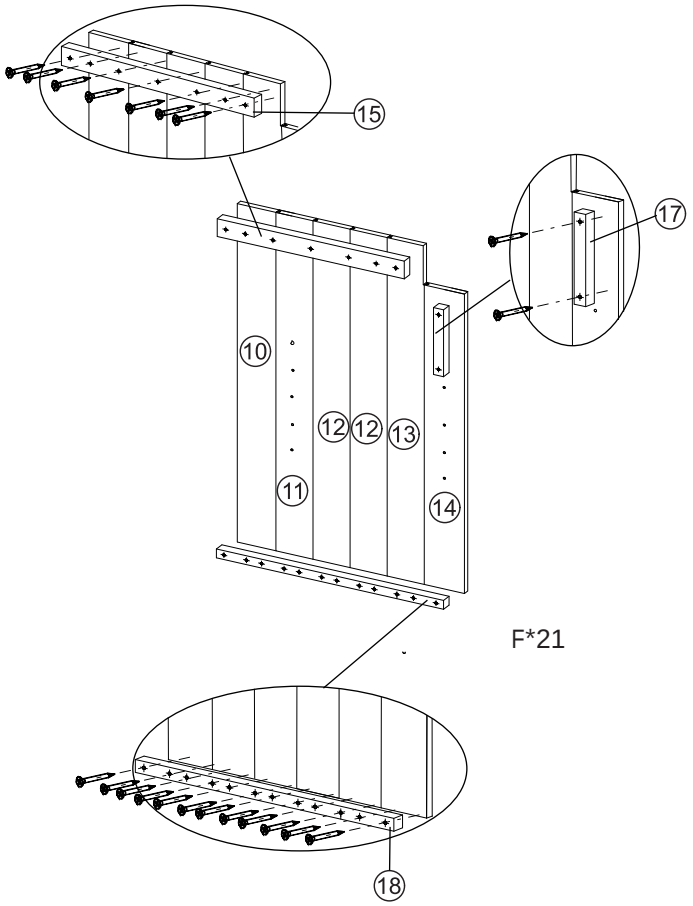

3

3.0*30MM
F*21

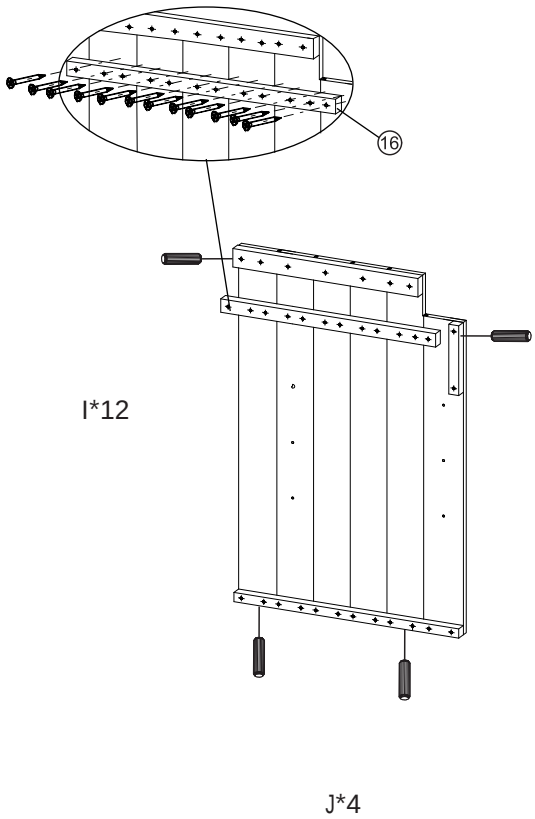

4

3.0*25MM	
I*12	J*4

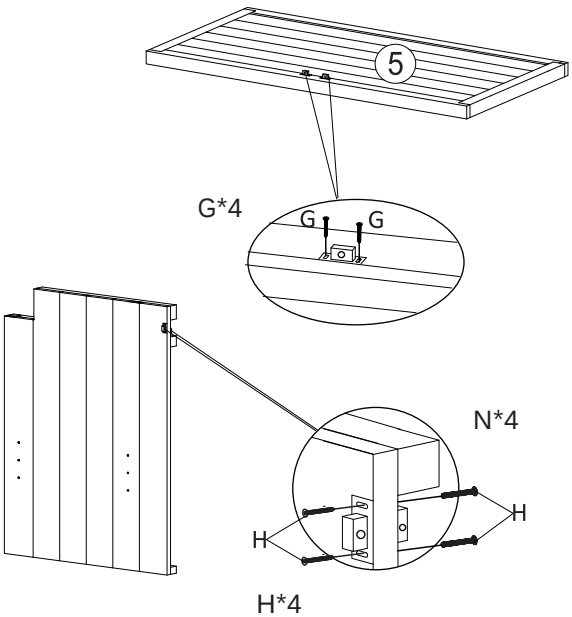

5

	3.0*12MM	3.0*14MM
N*4	H*4	G*4

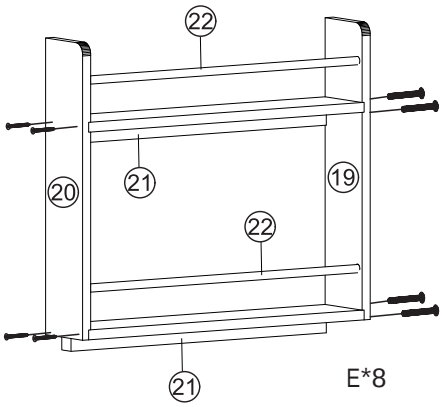

6

3.0*20MM
E*8

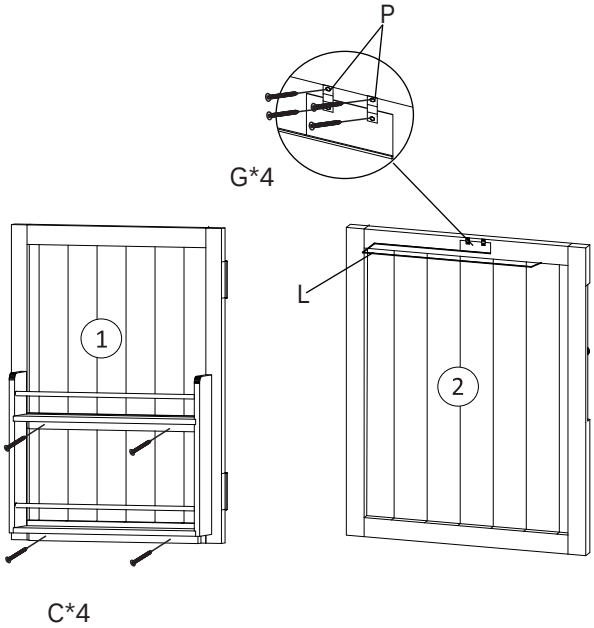

7

		3.5*30MM	3.0*14MM
P*2	L*1	C*4	G*4

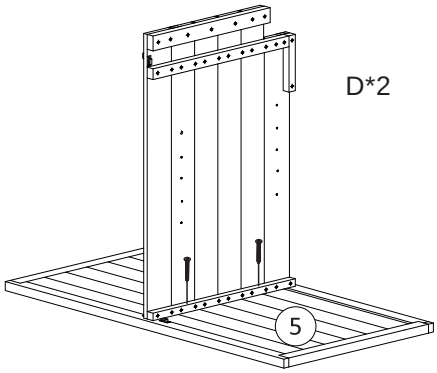

8

3.5*35MM
D*2

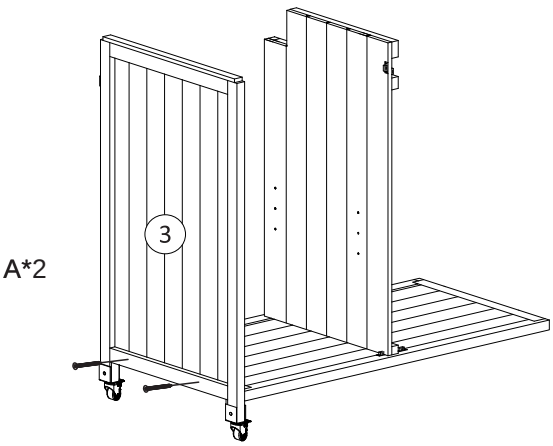

9

3.5*45MM
A*2

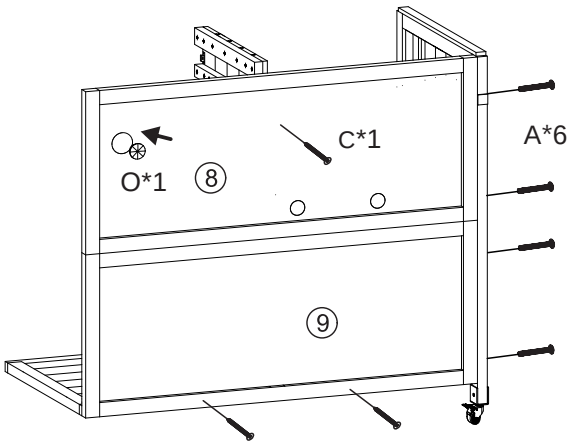

10

	3.5*30MM	3.5*45MM
O*1	C*1	A*6

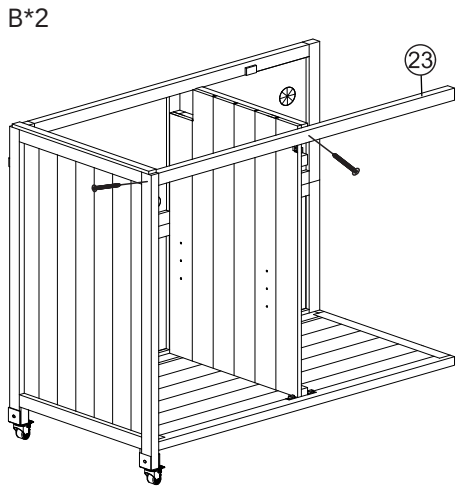

11

3.5*40MM
B*2

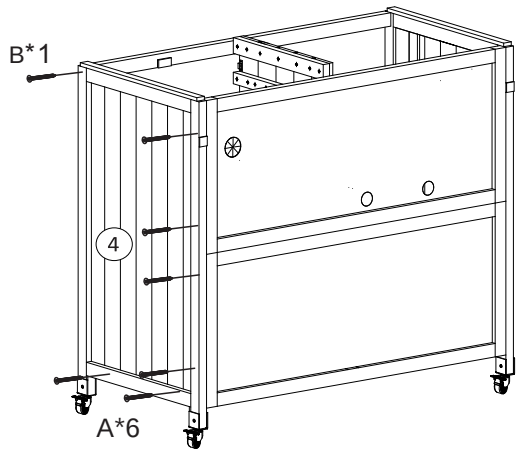

12

3.5*40MM	3.5*45MM
B*1	A*6

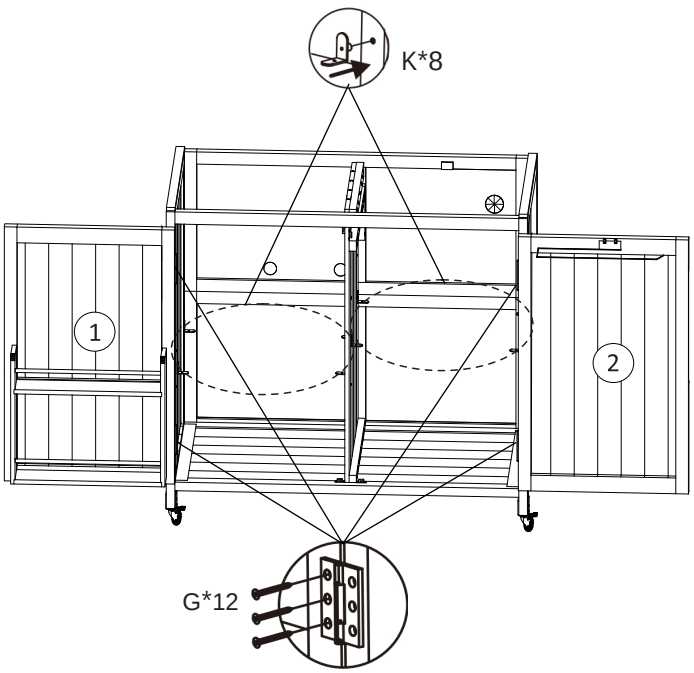

13

	3.0*14MM
K*8	G*12

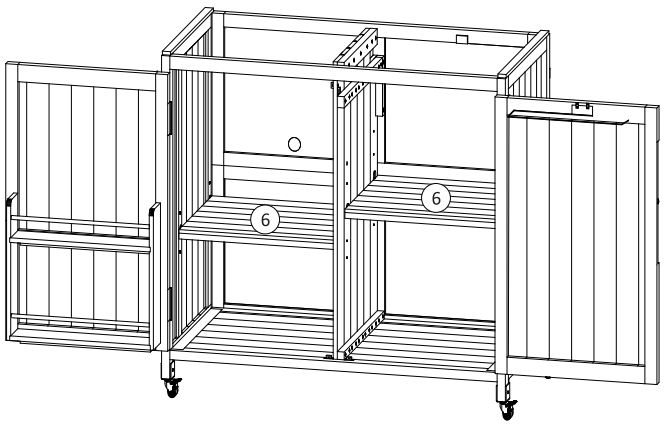

14

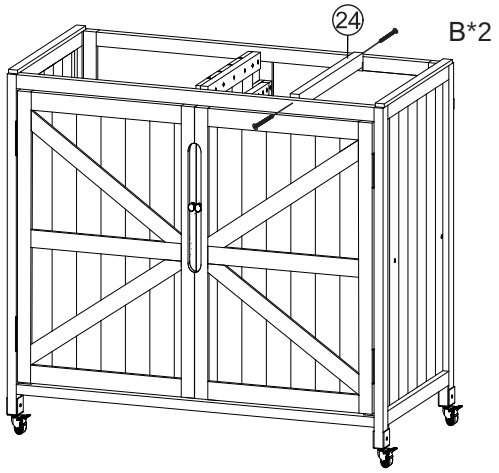

15

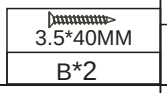

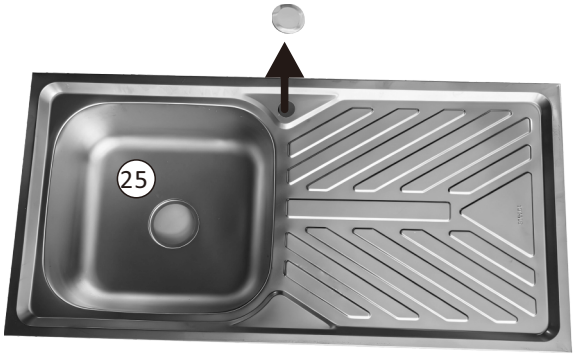

Attention:
Open by tools,dangerous of getting hurt.

16

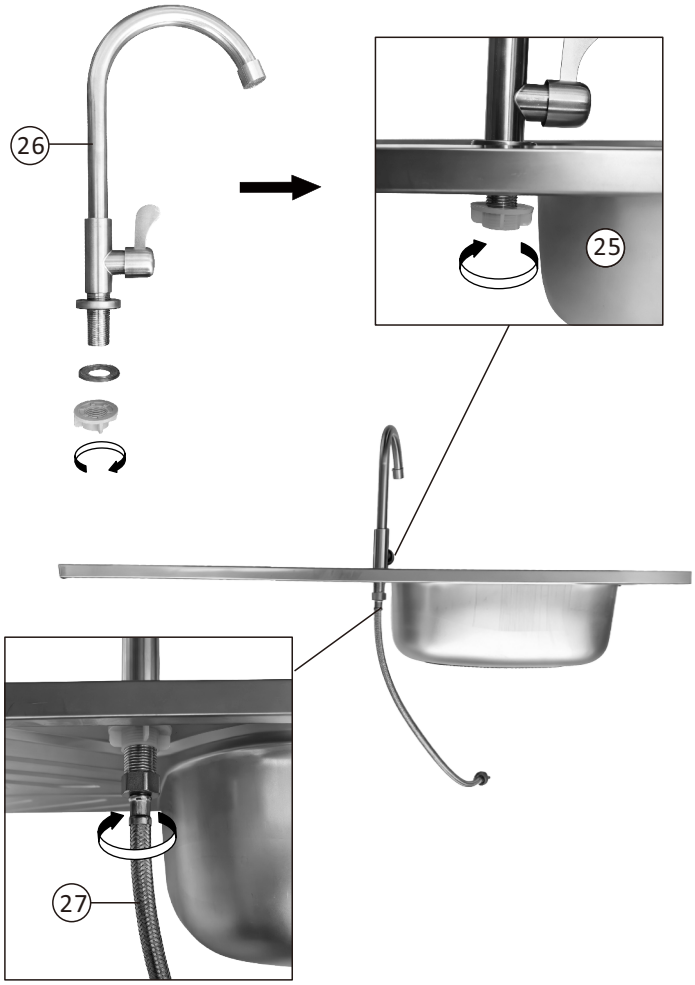

17

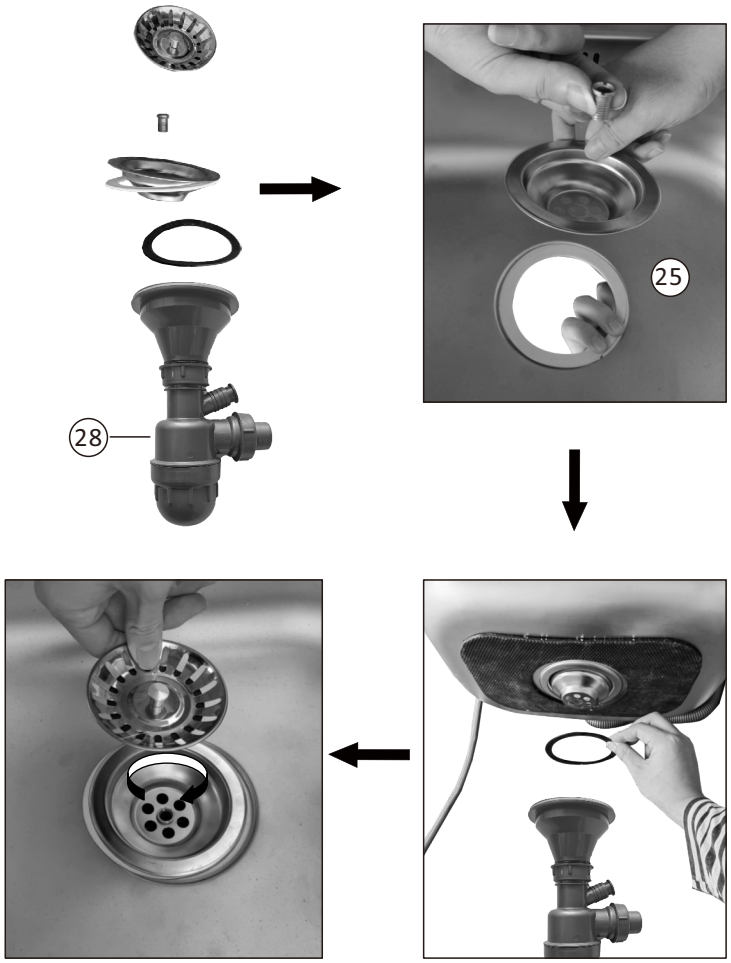

18

19

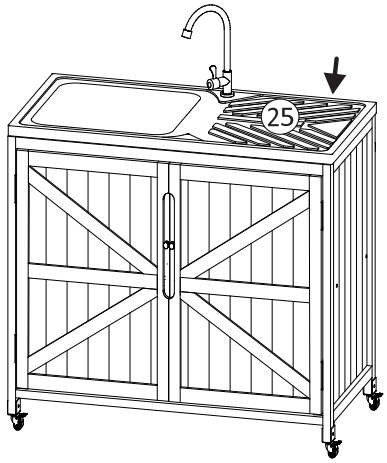

20

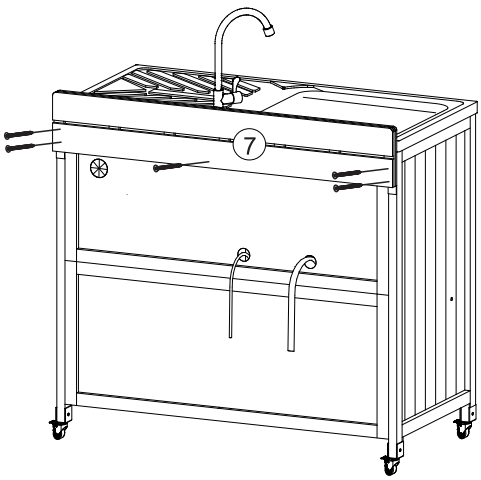

21

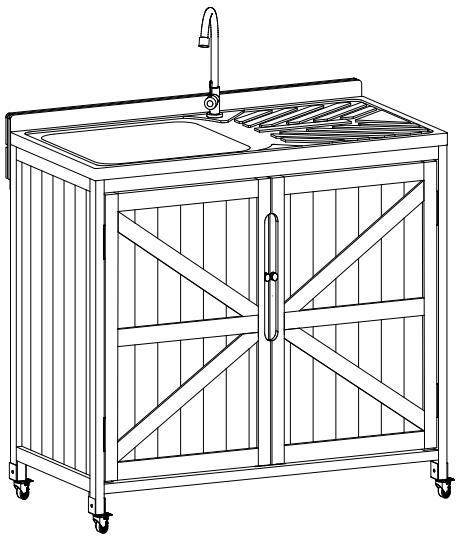

22

A*5

This Outdoor kitchen island with sink unit can be used to ad
d extra workspace and storage to
outdoor drawer unit (not included).

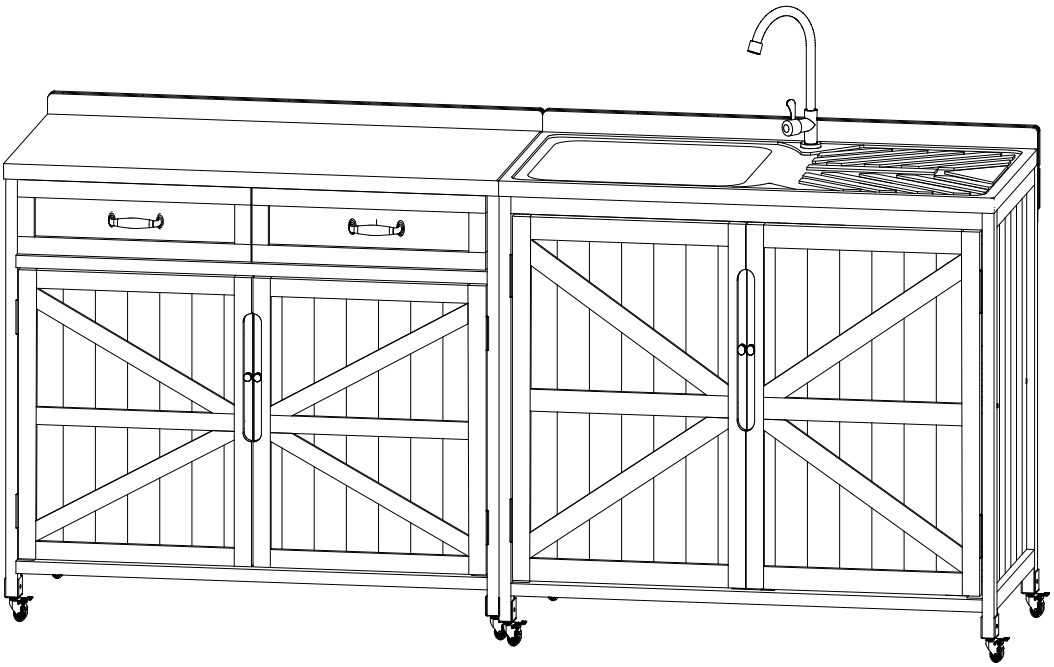

N707P370273 **N707P**370281