AMORE 10' CANTILEVER UMBRELLA

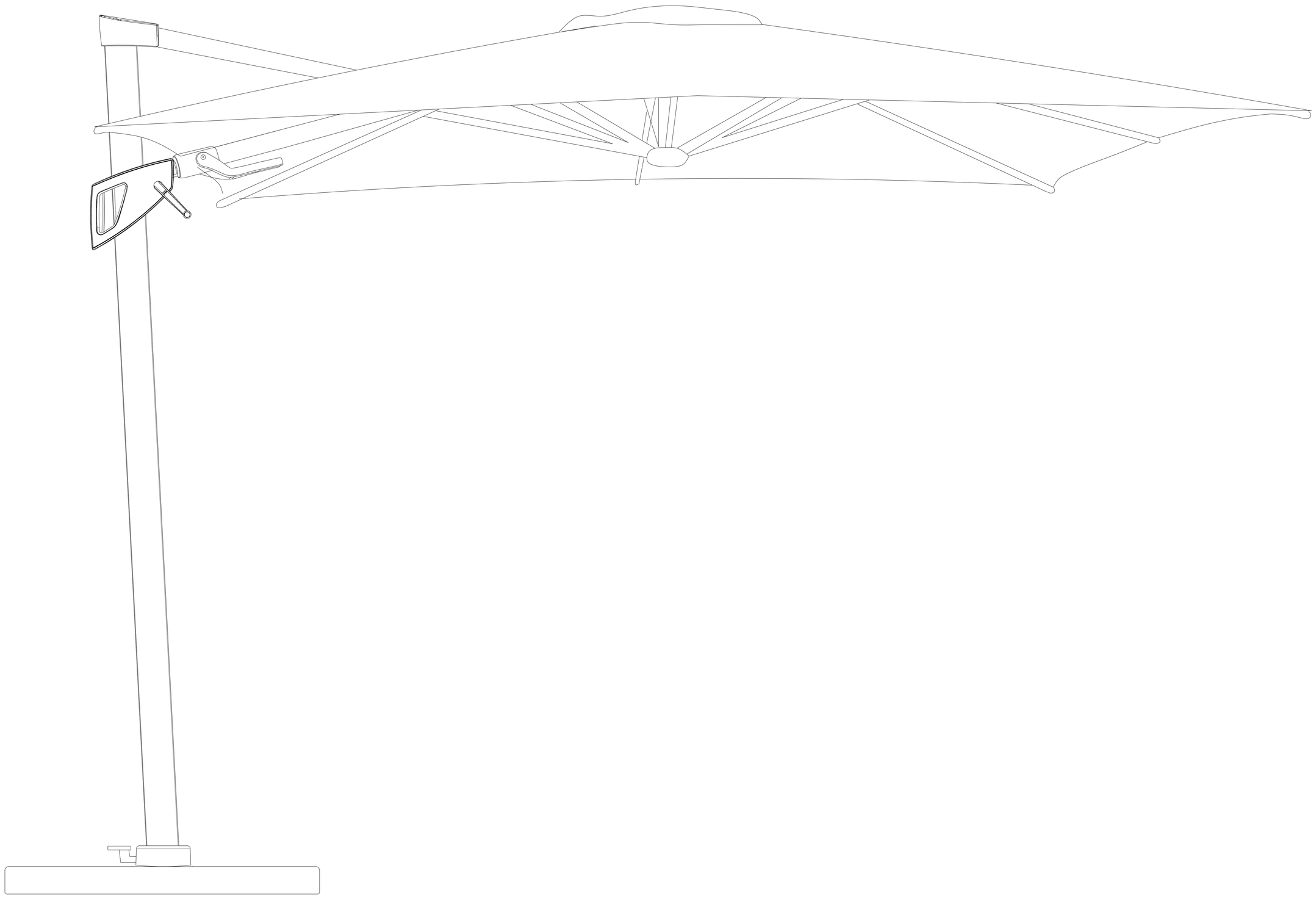

Warning !

1.Please read the entire instruction manual before you proceed and check if all parts are persent. Clear all the packing material and be careful not damage anything in the process.

2.When the umbrella is not in use for a long time or the wind speed is high or any other affecting factors are present, please close the umbrella and cover it to avoid damage.

Parts List

1. 1PC
2. 1PC
3. 1PC
4. 1PC
5. 4PC
6. 4PCS
7. 1PCS
8. 1PC
9. 1PC

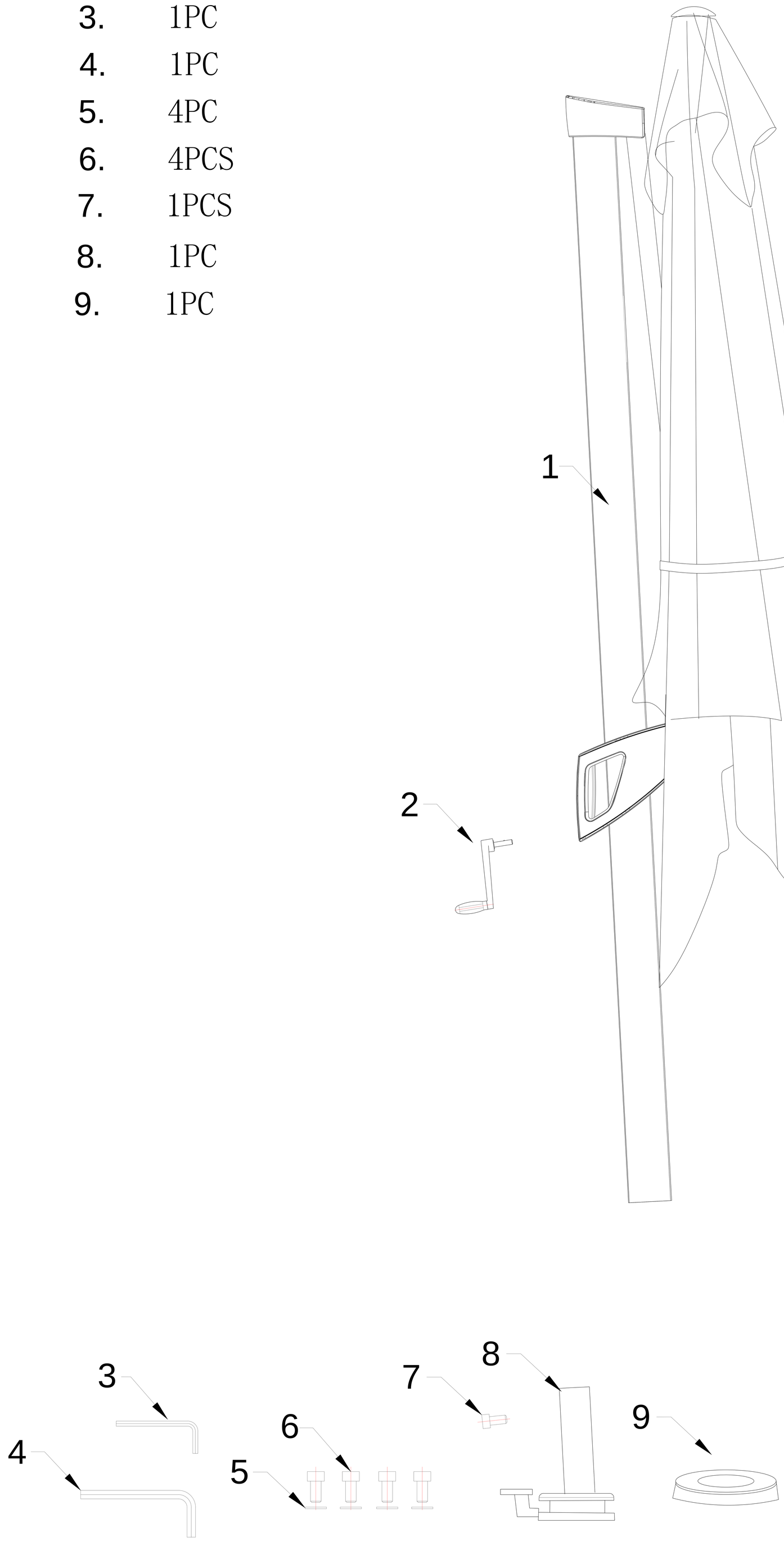

Step 1

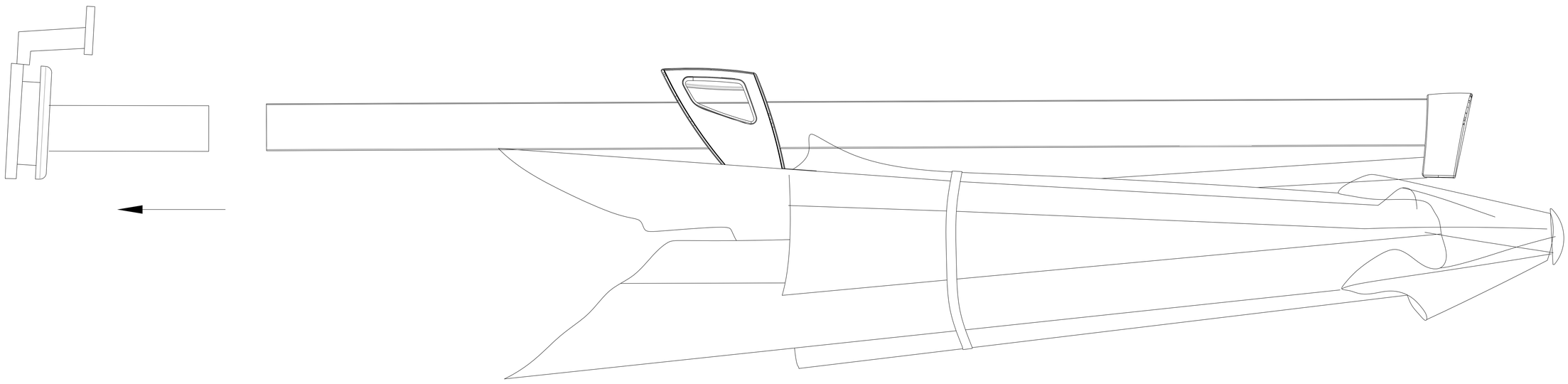

Step 2

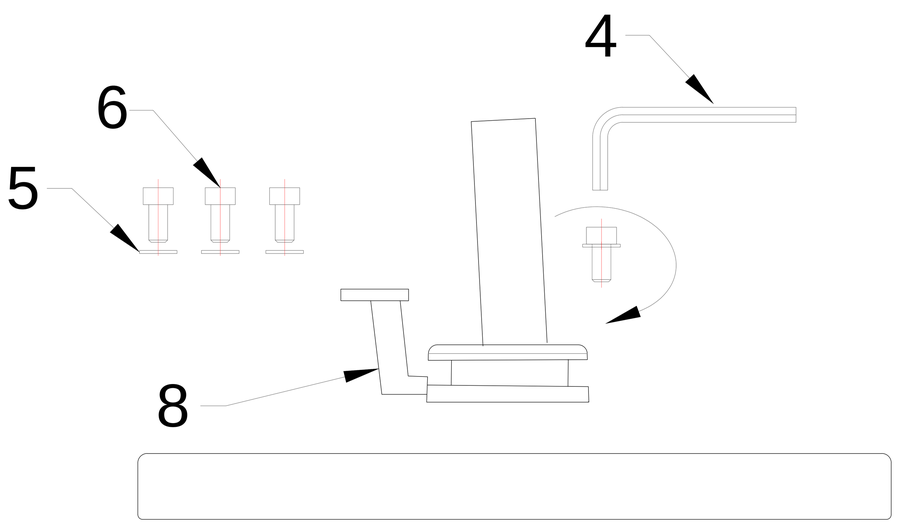

Step 3

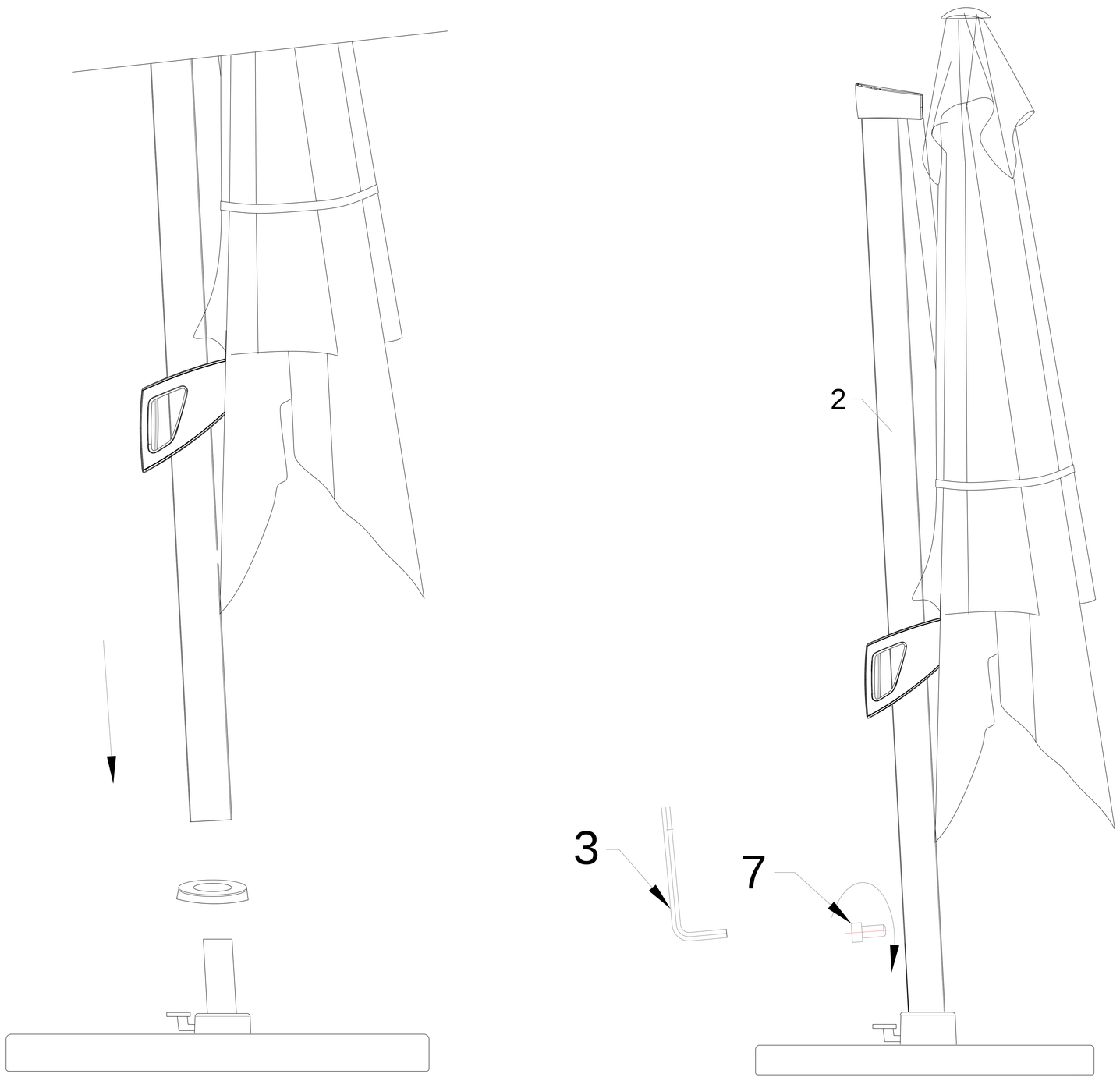

Step 4

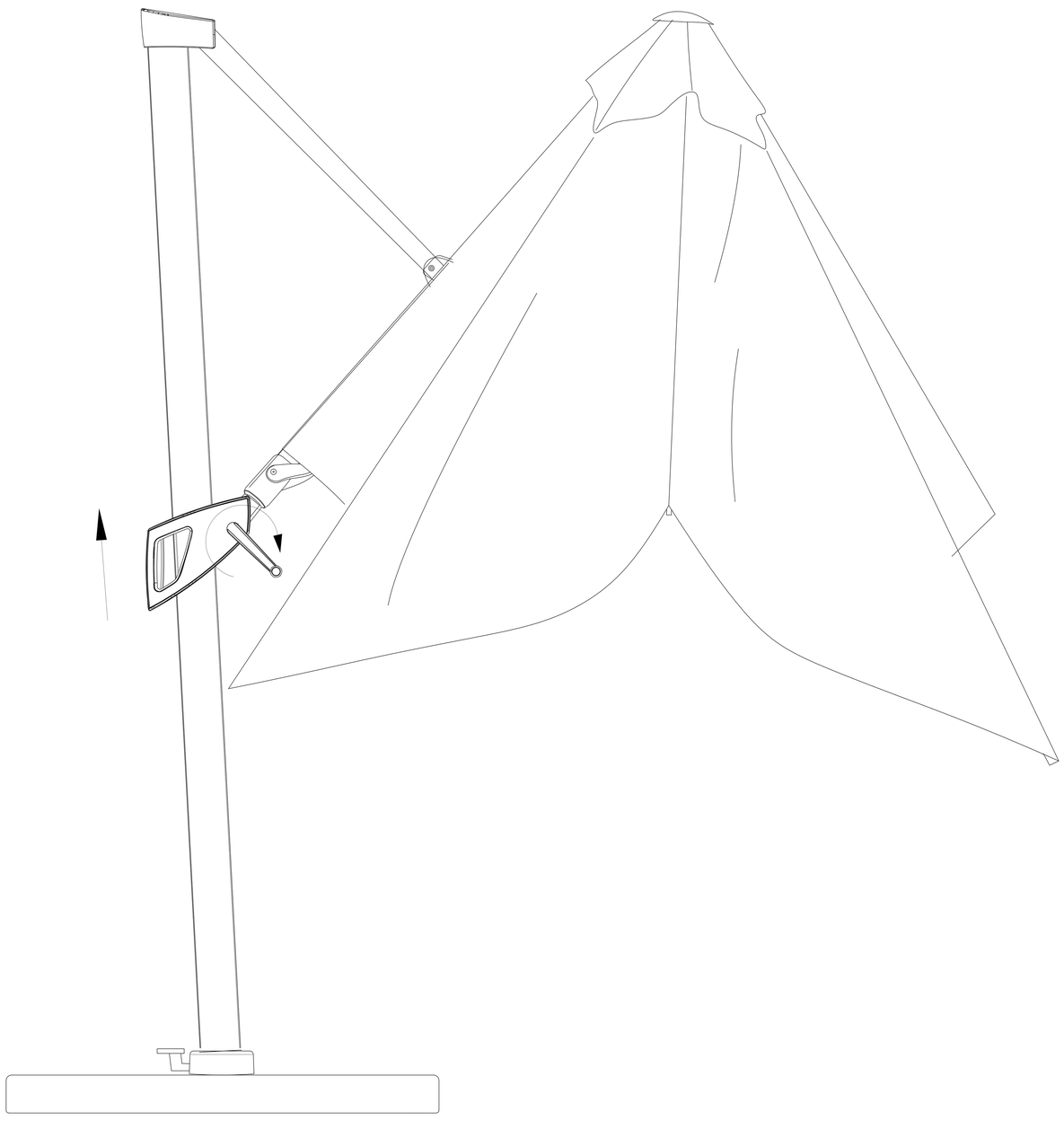

Step 5

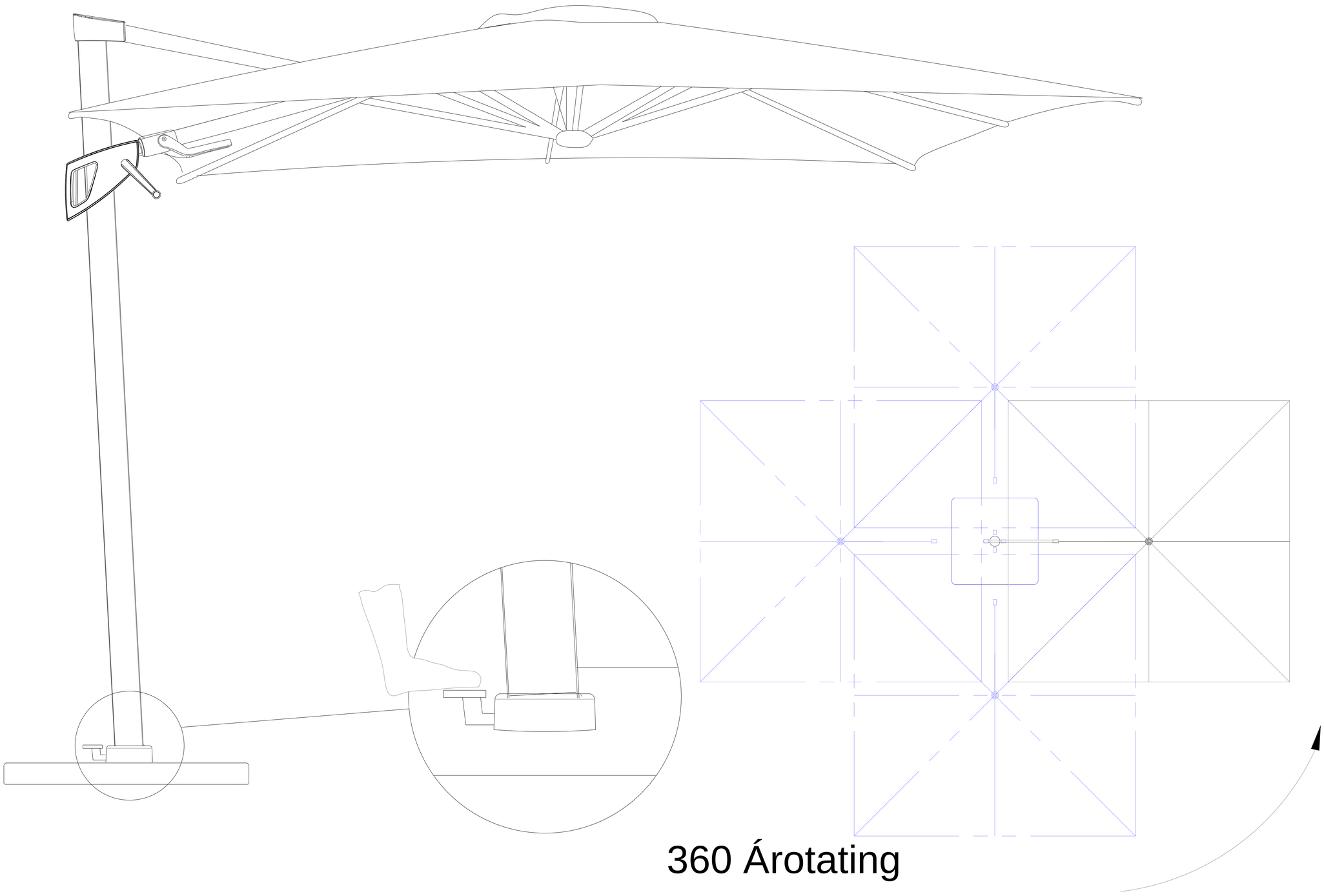
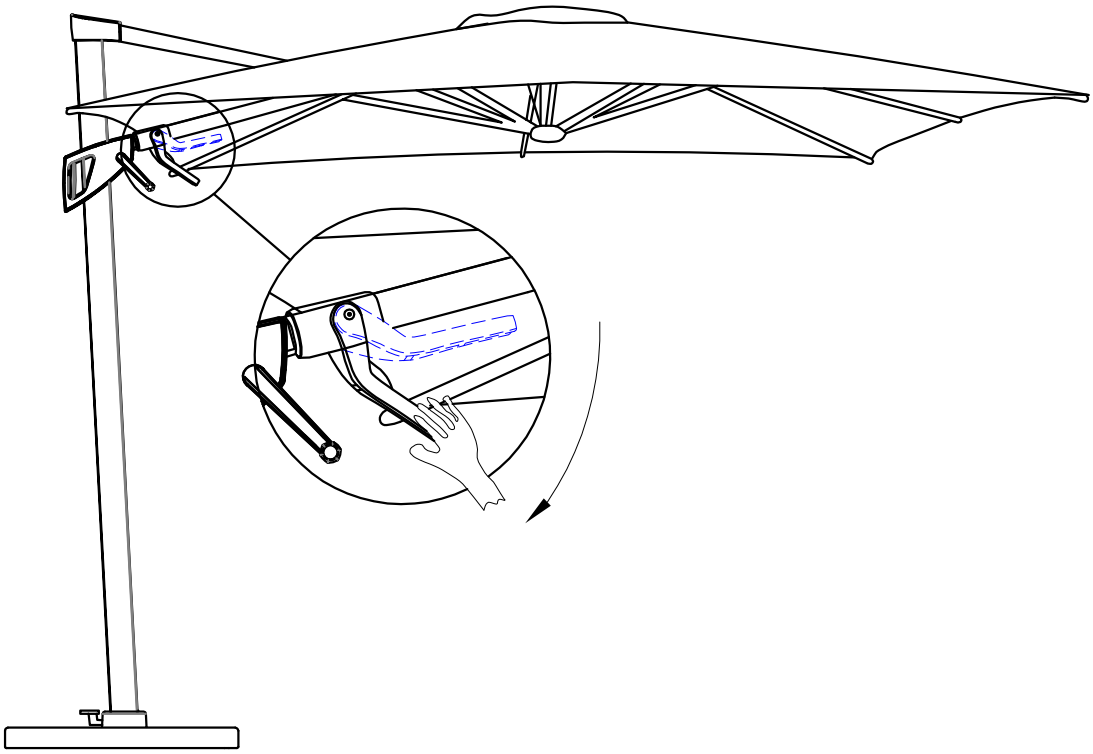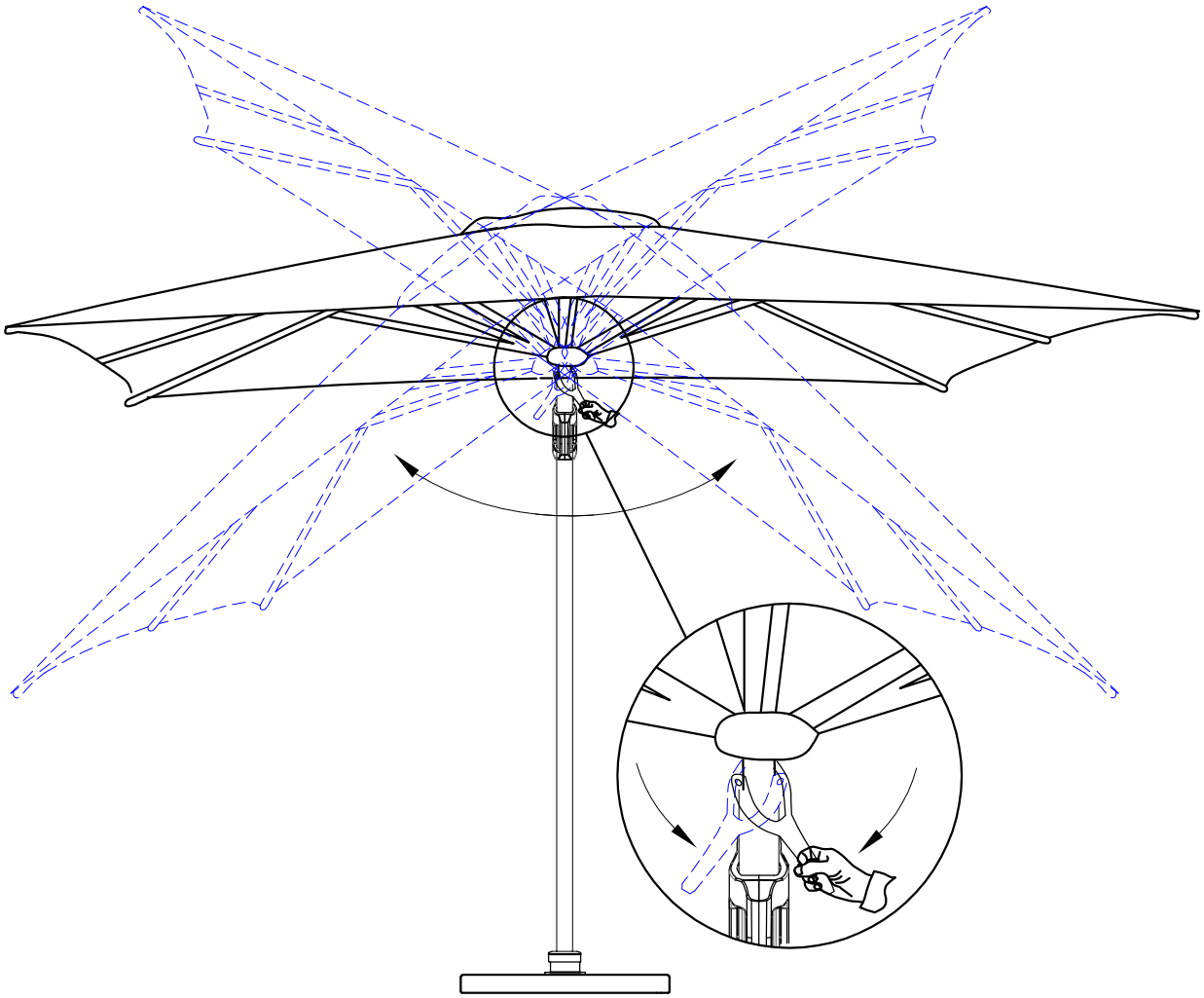
Step 6