CROSLEY
FURNITURE

King Bed
CF92008-601/602

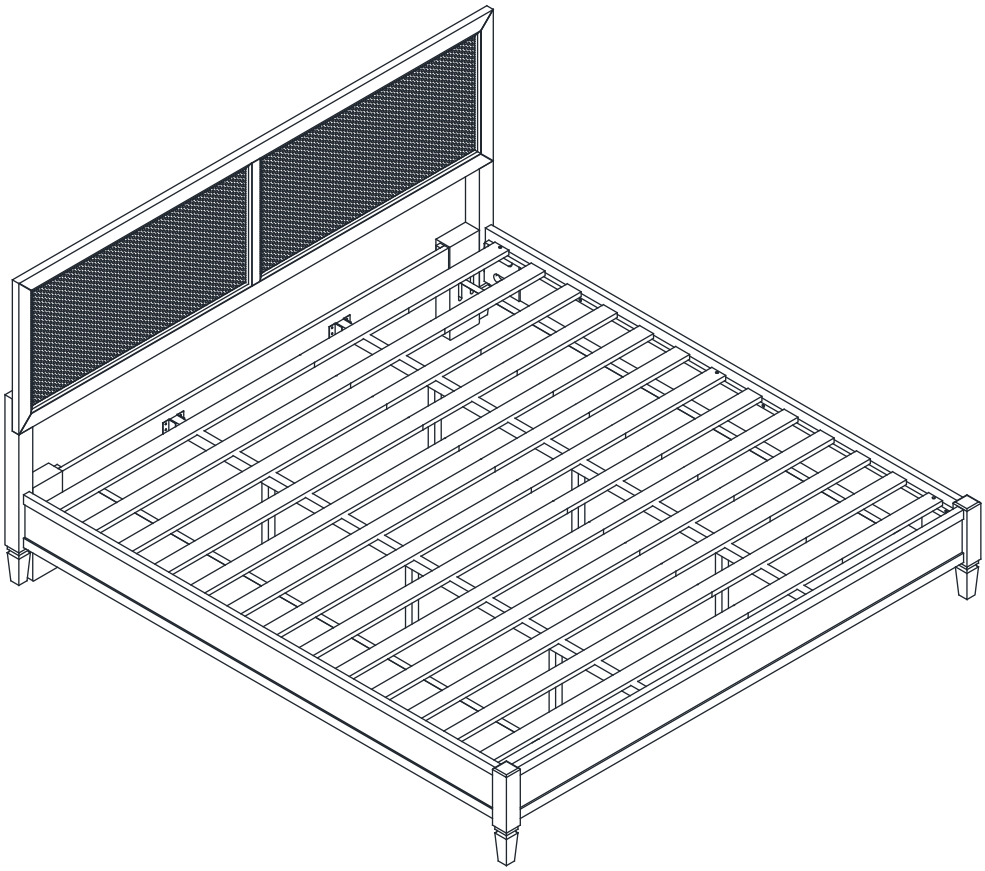

PART LIST

A 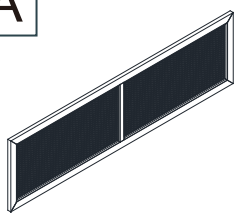	B	C	D 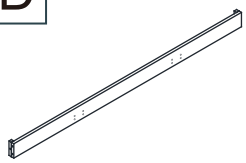	E 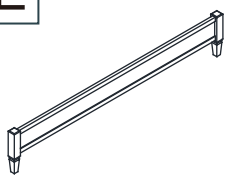
Headboard 1 PC	Left Post 1 PC	Right Post 1 PC	Crossbar 1 PC	Footboard 1 PC
F 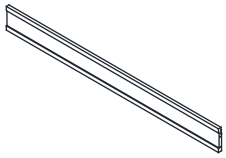	G 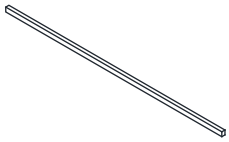	H	I 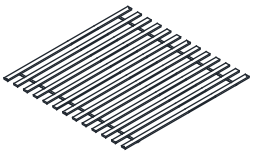	
Side Rail 2 PCS	Center Rail 2 PCS	Support Leg 6 PCS	Slats 1 SET	

Please note headboard, left post, right post and crossbar will ship separately.

HARDWARE LIST

#1 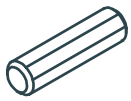 Ø8mm*1-1/8”	#2 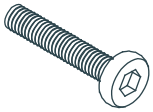 Ø1/4”*2”	#3 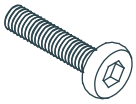 Ø1/4”*1-3/8”	#4	#5 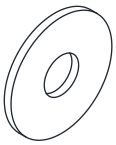
Wood Dowel 4 PCS (Extra 1)	Medium Bolt 8 PCS (Extra 1)	Short Bolt 2 PCS (Extra 1)	Spring Washer 10 PCS (Extra 1)	Flat Washer 10 PCS (Extra 1)
#6 4mm	#7 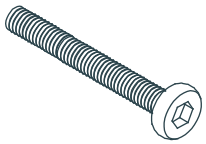 Ø1/4”*3”	#8	#9 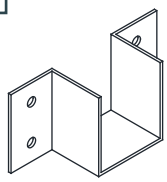	#10 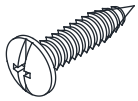 4mm
Allen Wrench 1 PC	Long Bolt 8 PCS (Extra 1)	Crescent Washer 8 PCS (Extra 1)	U-Shape Bracket 4 PCS	Short Screw 16 PCS (Extra 1)
#11 #8*30mm				
Long Screw 6 PCS (Extra 1)				

Please note hardwares #1, #2, #3, #4, #5, #6 are shipped in the headboard package.

ADDITIONAL TOOLS (Not Provided)
Note: It is not recommended to use power tools during assembly.

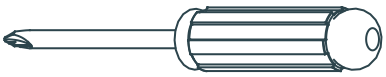

Phillips Head Screwdriver

Note: Wood dowels are intended for alignment. Additional clearance between wood dowel and pre-drilled hole is intentional for ease of assembly.

Step 1. Attach left post (part B) and right post (part C) to crossbar (part D) using wood dowels (part #1), short bolts (part #3), spring washers (part #4), flat washers (part #5) and allen wrench (part #6).

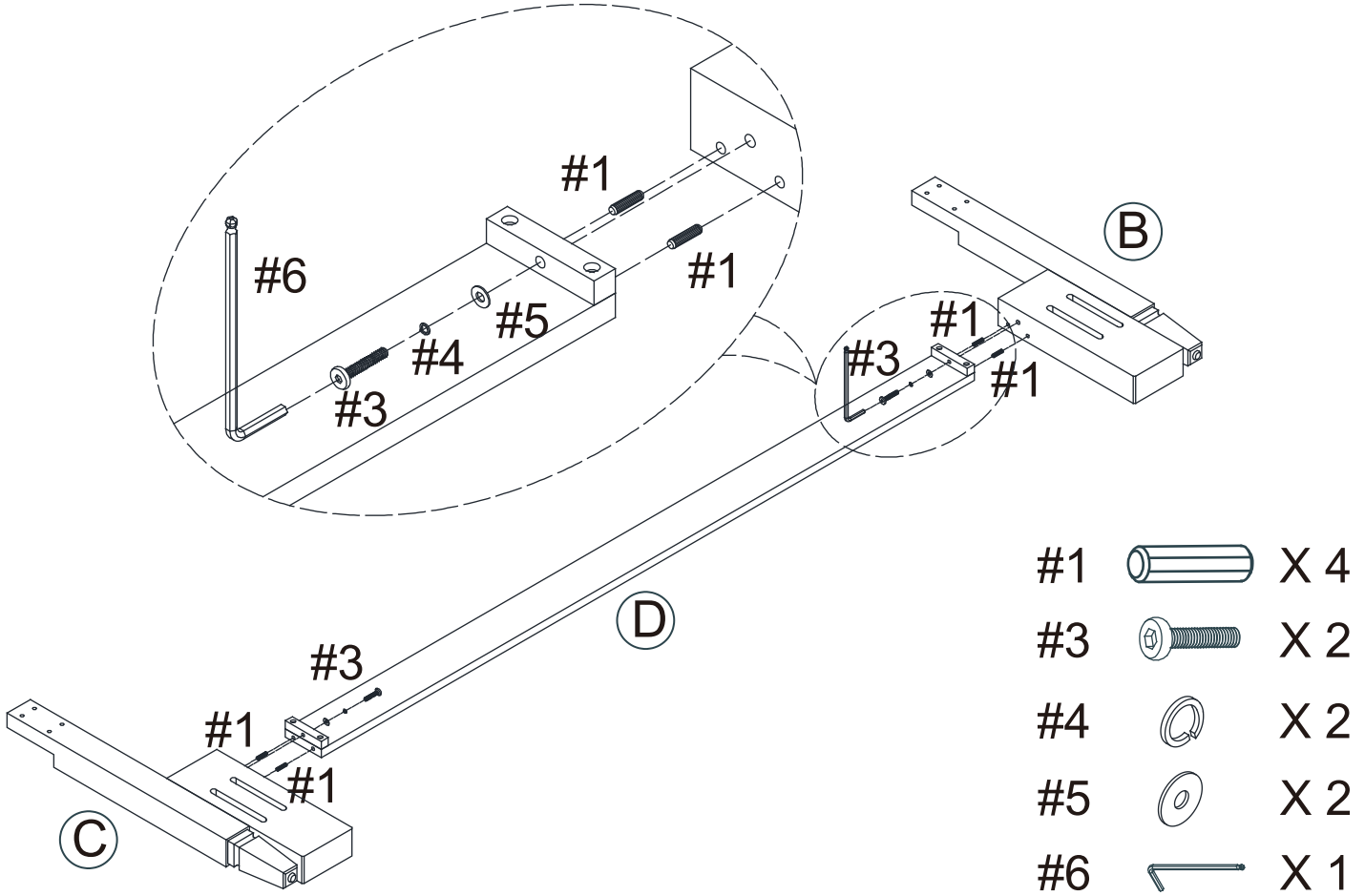

Step 2. Attach left post (part B) and right post (part C) to headboard (part A) using medium bolts (part #2), spring washers (part #4), flat washers (part #5) and allen wrench (part #6).

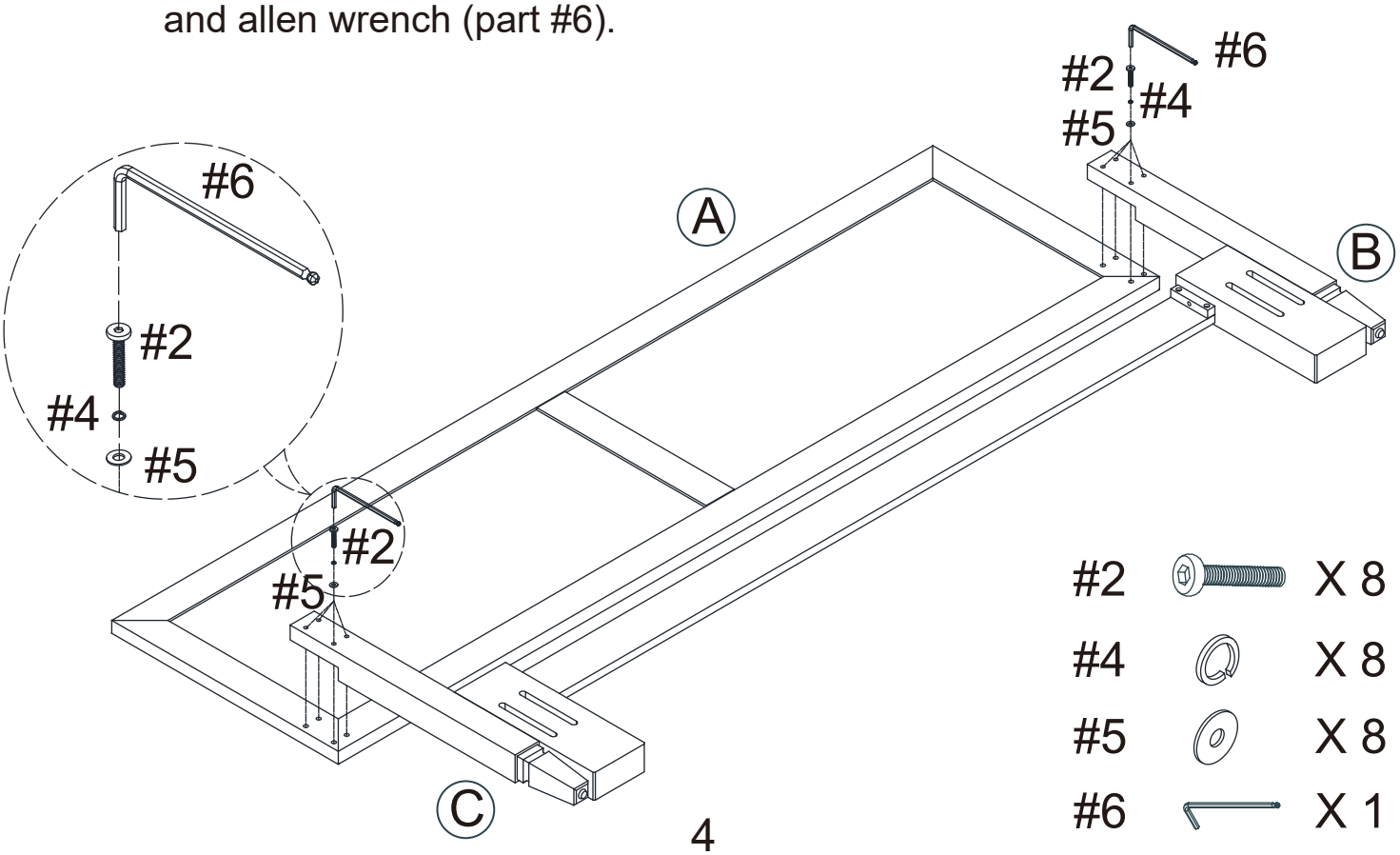

Step 3. Attach u-shape brackets (part #9) to crossbar (part D) using short screws (part #10) and phillips head screwdriver.

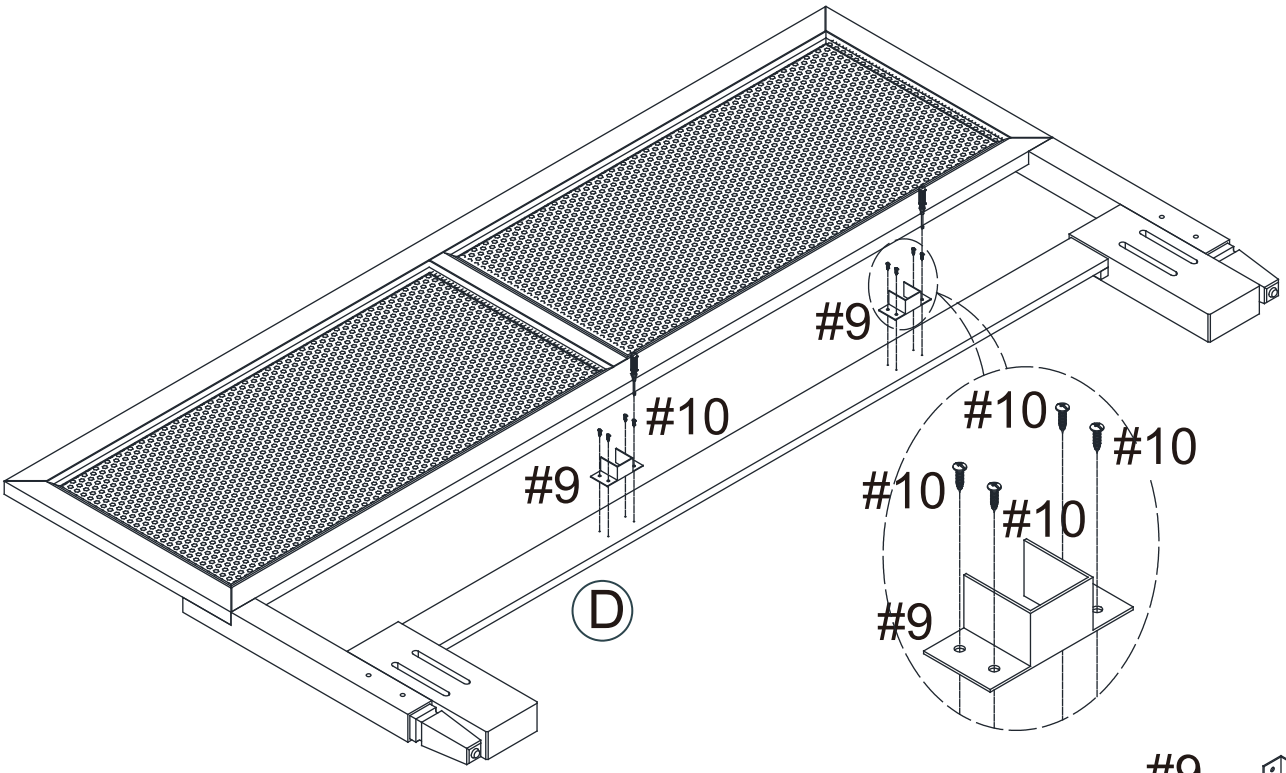

#9 X 2

#10 X 8

Step 4. Attach u-shape brackets (part #9) to footboard (part E) using short screws (part #10) and phillips head screwdriver.

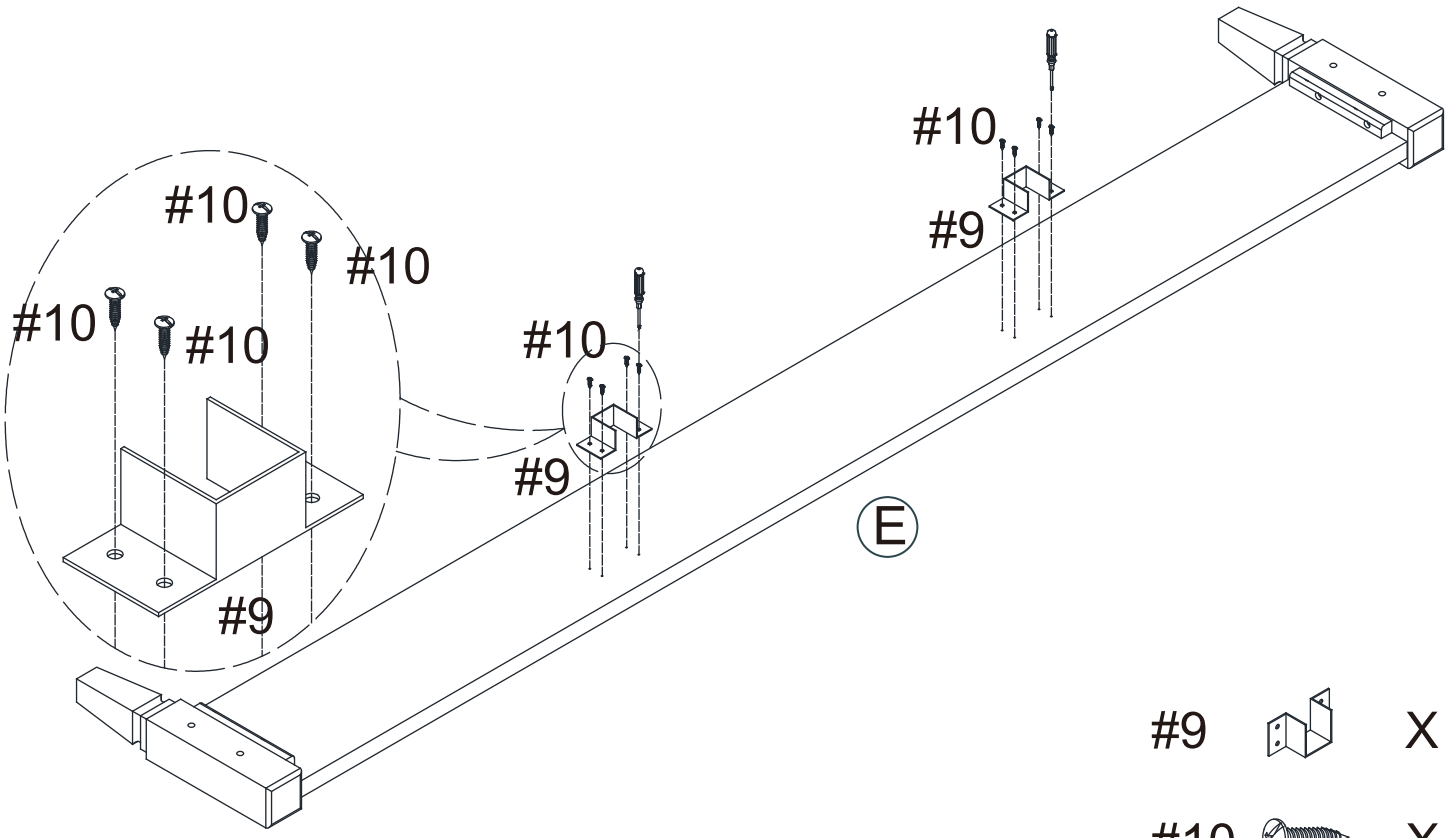

#9 X 2

#10 X 8

Step 5. Attach side rails (part F) to left post (part B), right post (part C) and footboard (part E) using long bolts (part #7), crescent washers (part #8) and allen wrench (part #6).

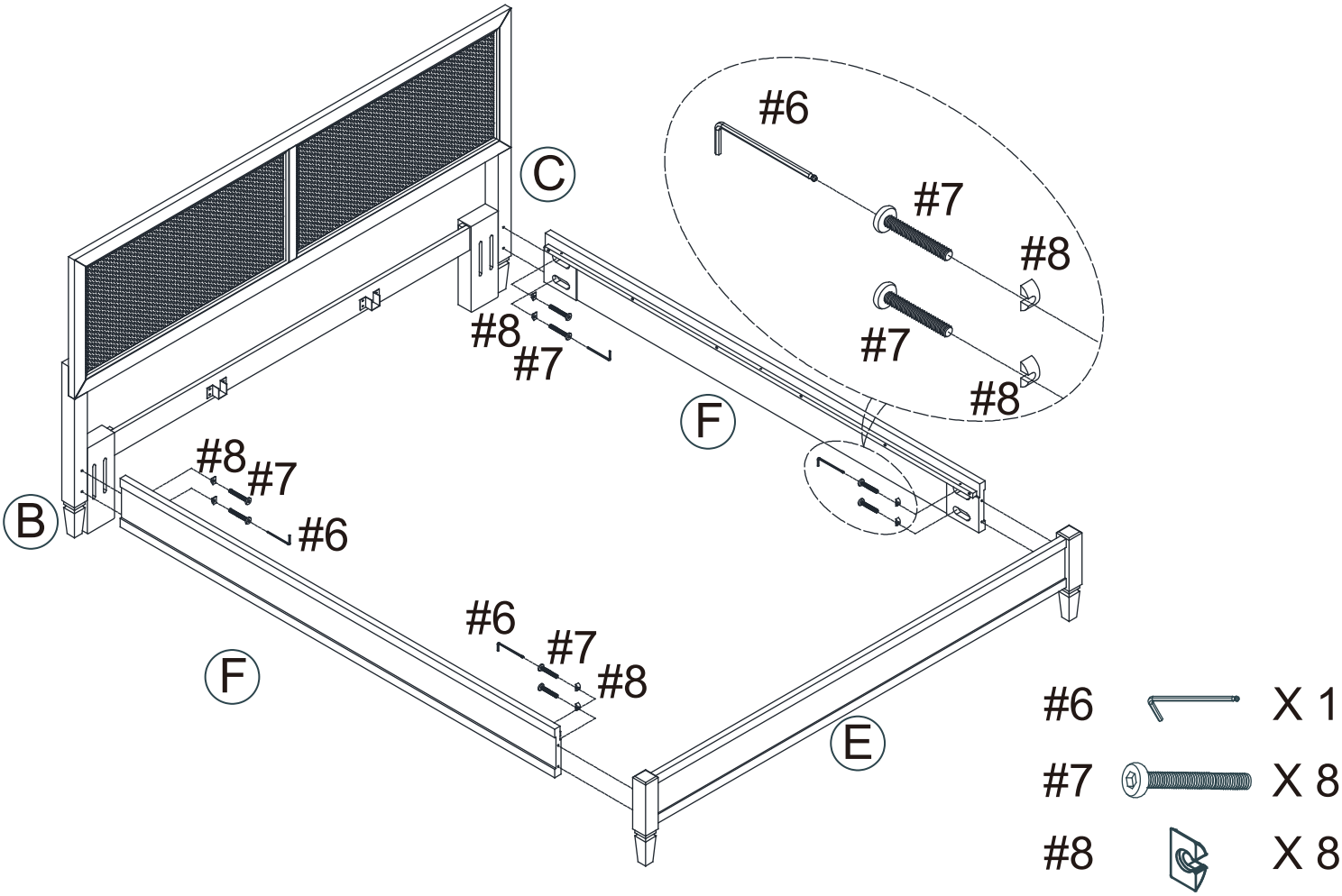

Step 6. Attach support legs (part H) to center rails (part G).

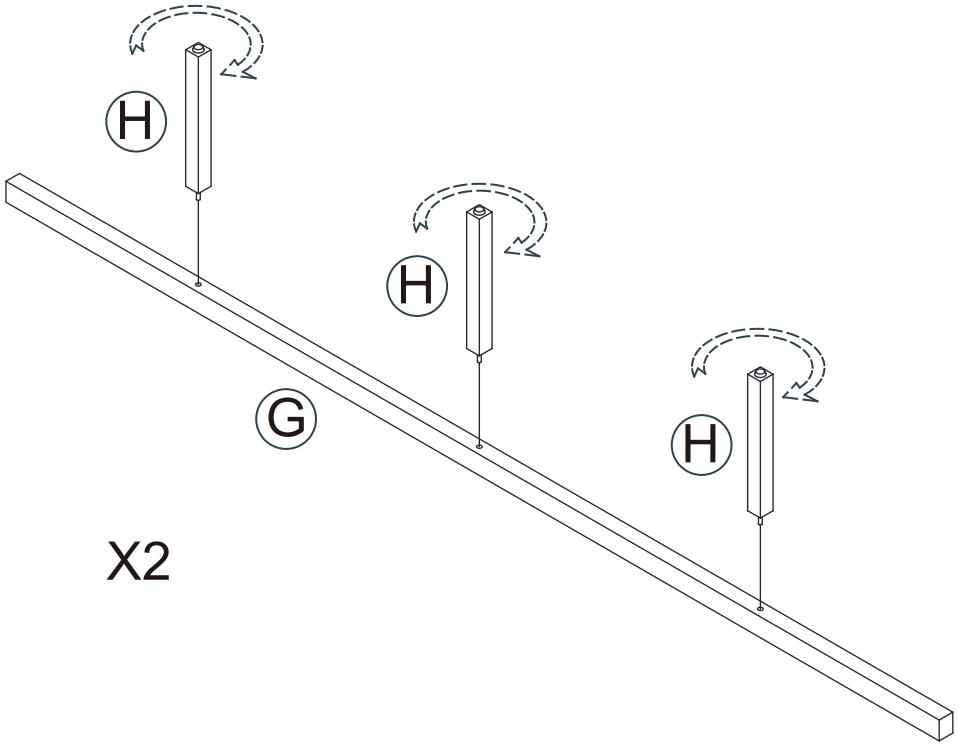

Step 7. Attach center rails (part G) to u-shape brackets (part #9).

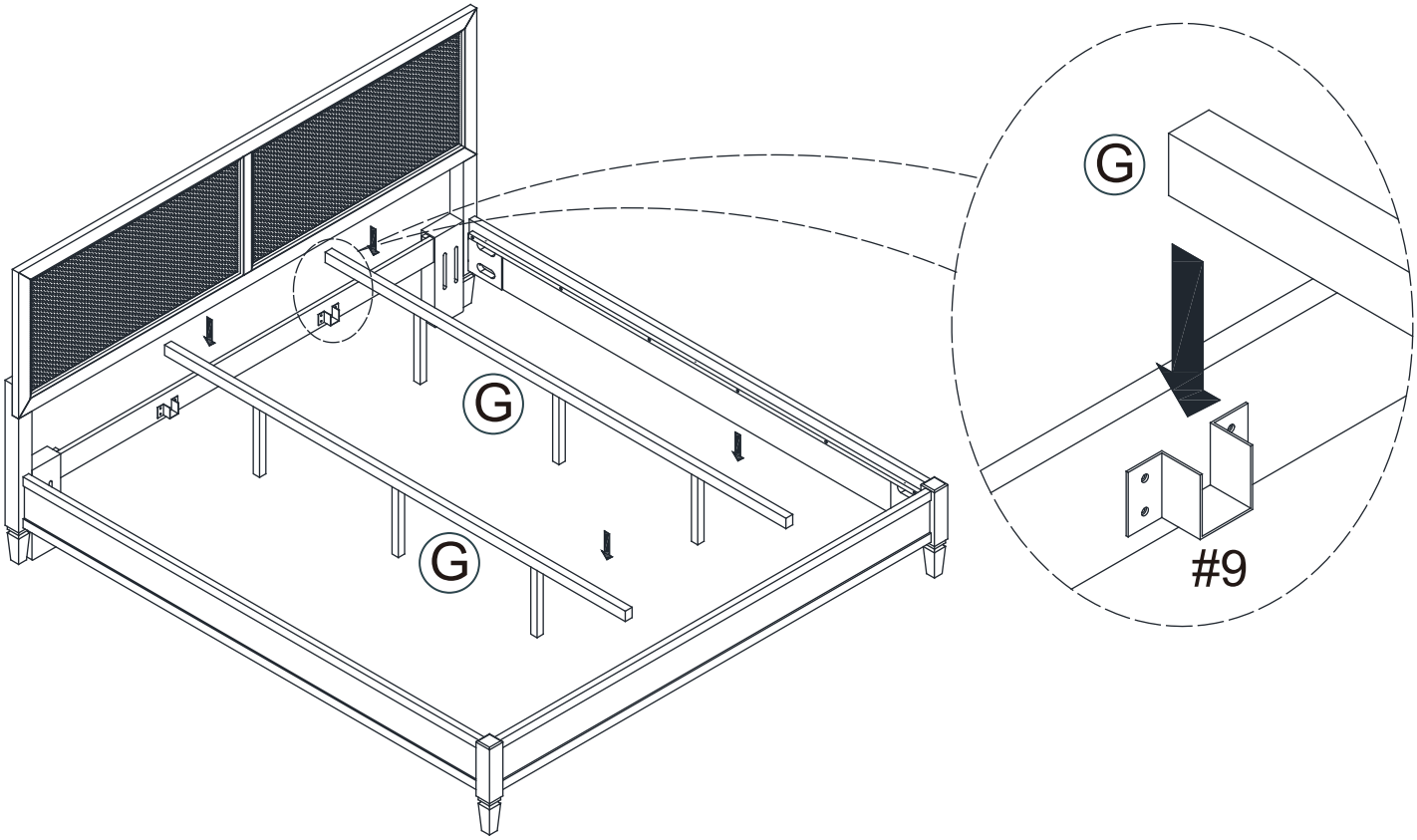
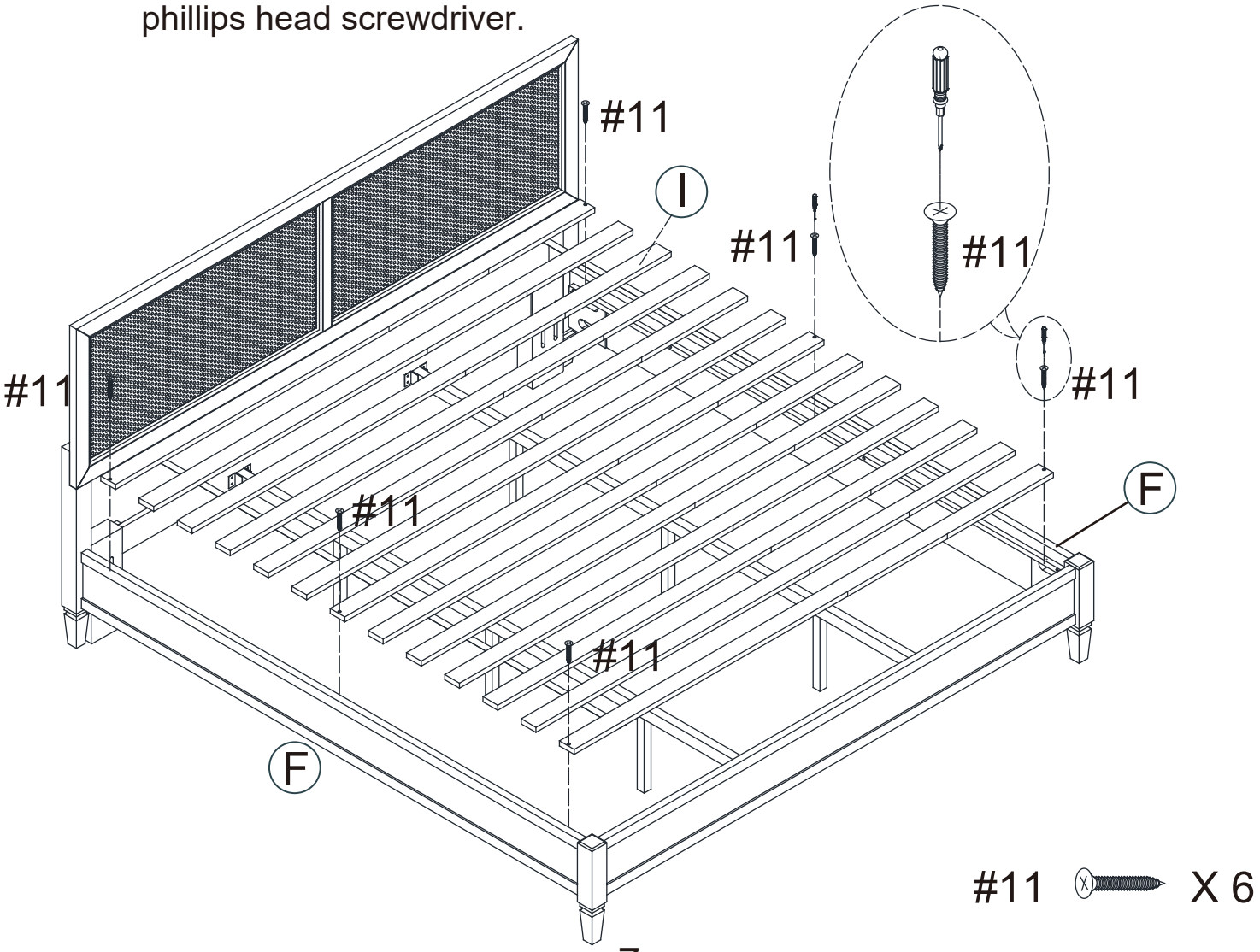
Step 8. Attach slats (part I) to side rails (part F) using long screws (part #11) and phillips head screwdriver.