ASSEMBLY INSTRUCTIONS

CVFDR1029

PARTS

S.NO.	DESCRIPTION		QNT
A		TOP	01
B		TOP LEGS	20
C		SHELF	05
D		LOWER LEGS	04

STEP - 1

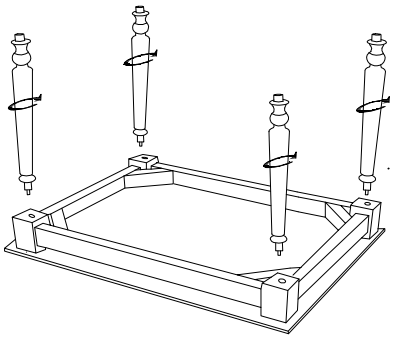

Place the Top (A) on the floor, attach the top legs (B) to the mounting holes on the top, make sure the installation is not tilted (at this step, don't tighten the top legs completely)

STEP - 2

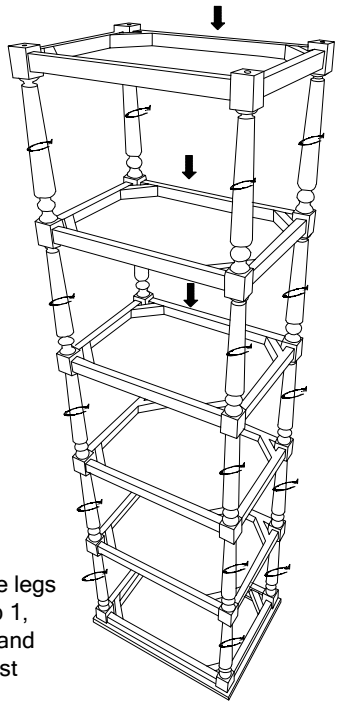

Install the shelf according to the legs that have been installed in step 1, then attach it again like step 1 and follow the next shelf until the last shelf

STEP - 3

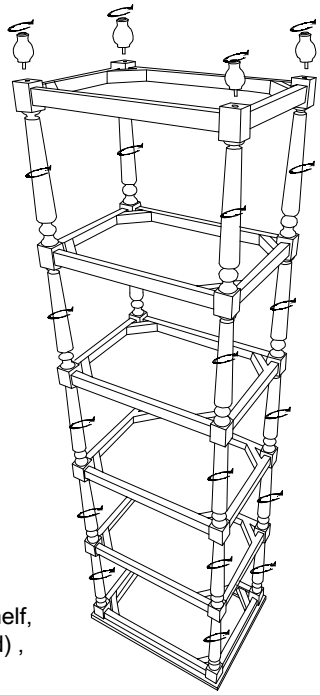

Install the lower legs(D) on the last shelf, (make sure the installation is not tilted) , tighten all the legs perfectly

COMPLETED

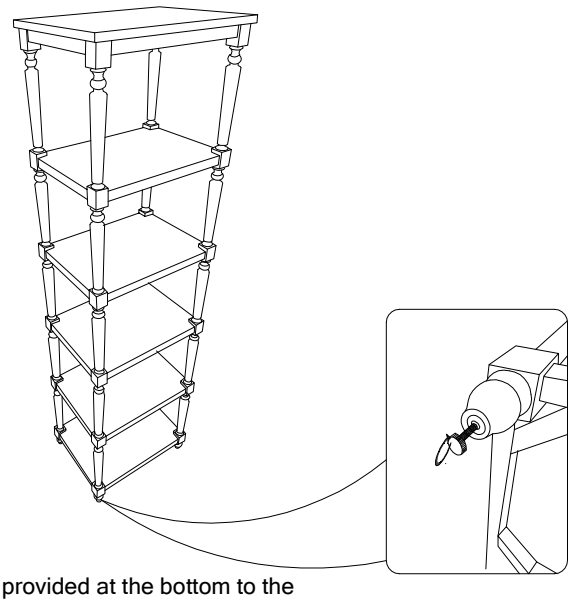

Leveller are provided at the bottom to the balance on uneven surface

MADE IN INDONESIA

ANTI - TIP KIT INSTALLATION INSTRUCTIONS
CVFDR1029_ETAGERE

A : 1X

B : 2X

C : 2X S5

D : 2X
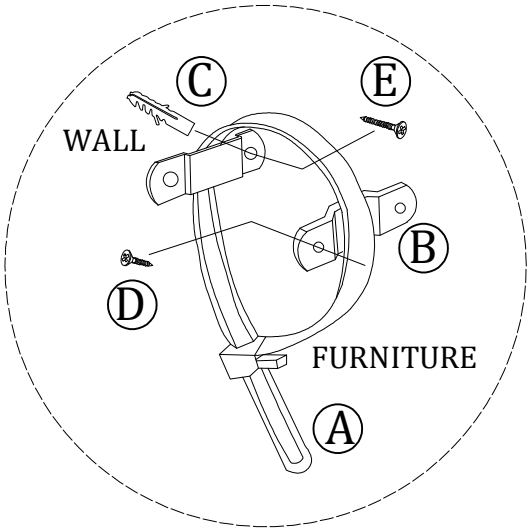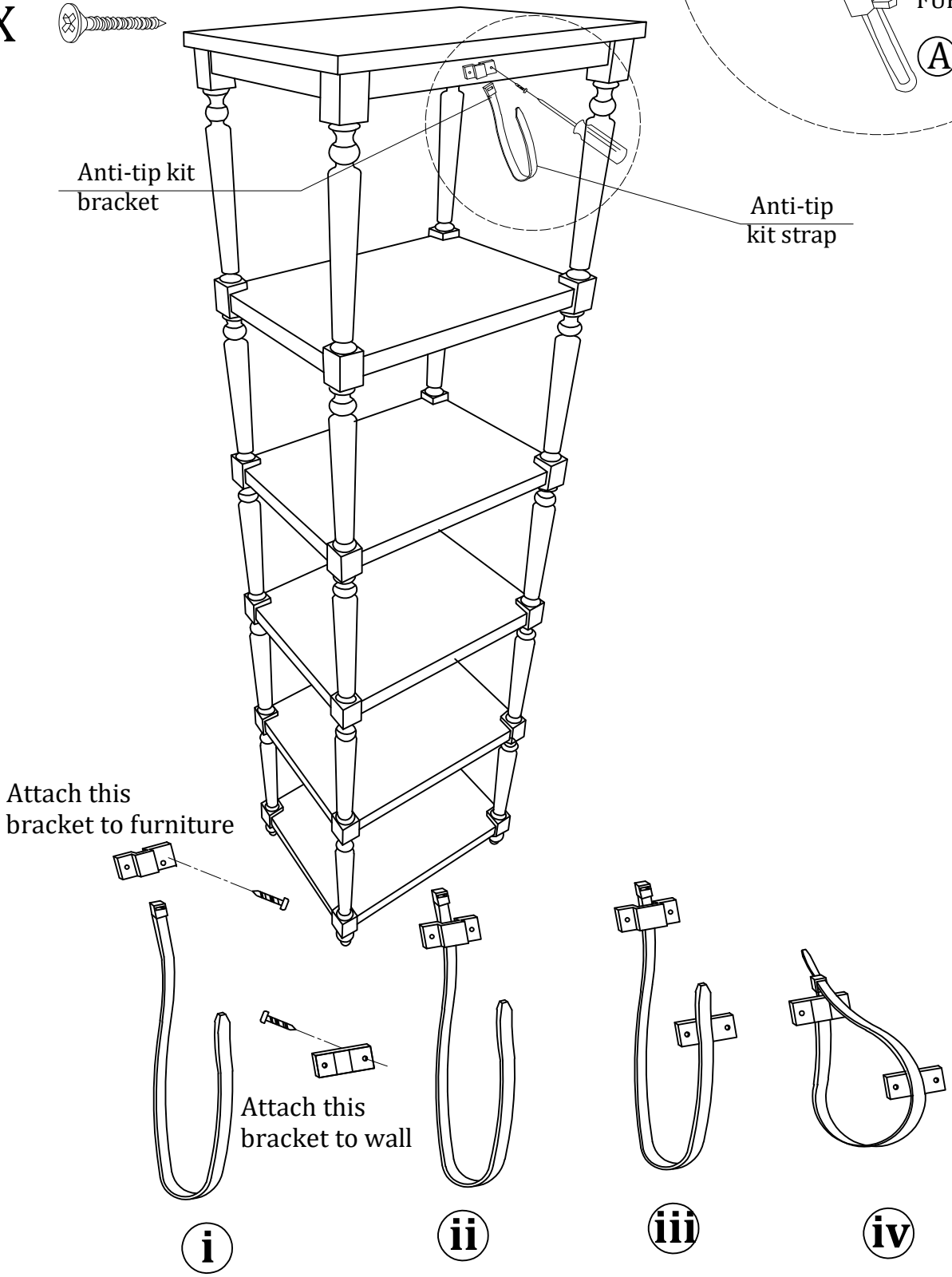
E : 2X