LV C2318

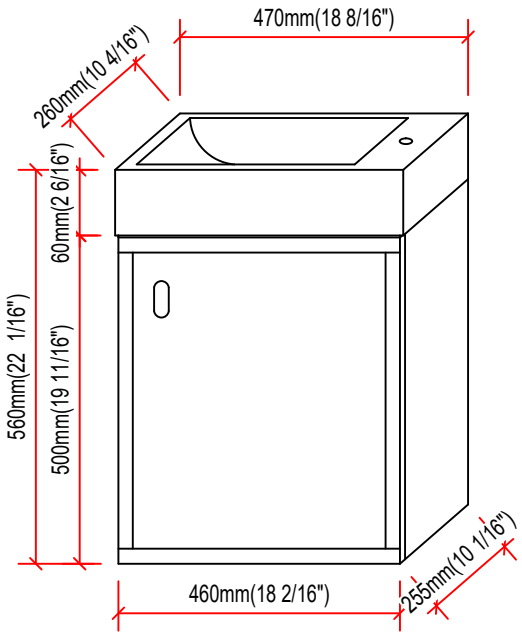

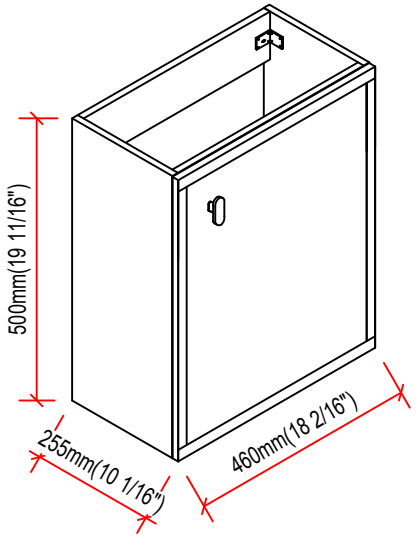

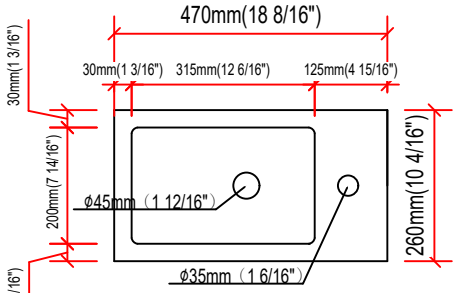

Top view

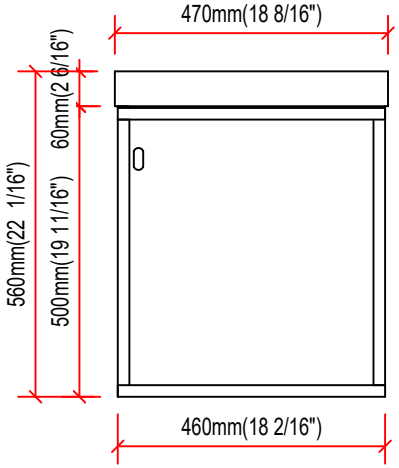

Front view

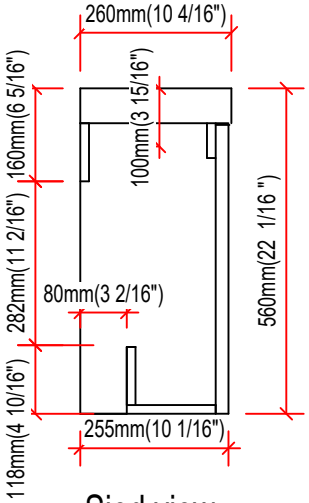

Sied view