COASTER
FINE FURNITURE

ASSEMBLY INSTRUCTIONS
COASTER FINE FURNITURE

Fine Furniture for every stage of life

223161KE(B1-B4)
Eastern King Bed

REVISION 0 : 09/23/2025

COASTERFURNITURE.COM

ITEM: 223161KE(B1-B4)

ASSEMBLY INSTRUCTIONS

ASSEMBLY TIPS :

1. Remove hardware from box and sort by size.
2. Please check to see that all hardware and parts are present prior to start of assembly.
3. Please follow attached instructions in the same sequence as numbered to assure fast & easy assembly.

WARNING !

1. Don't attempt to repair or modify parts that are broken or defective. Please contact the store immediately.
2. This product is for home use only and not intended for commercial establishments.

ASSEMBLY TIME | 35 MINUTES

PARTS IDENTIFICATION

B1 (BOX 1)

A	HEADBOARD PANEL	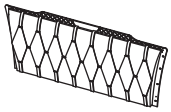	1PC
B	HEADBOARD SUPPORT		2PCS
C	ADAPTER		1PC

B2 (BOX 2)

D	LEFT WING		1PC
E	RIGHT WING		1PC

B3 (BOX 3)

F	FOOTBOARD PANEL	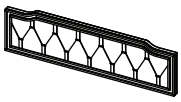	1PC

B4 (BOX 4)

G	FOOTBOARD LEG		2PCS
H	BED SLAT		5PCS
I	BED SLAT SUPPORT WITH LEVELER		10PCS
J	LEFT BED RAIL		1PC
K	RIGHT BED RAIL		1PC

NOTE:

Phillips head screw driver is required in the assembly process; however, manufacturer does not provide this item.

ITEM: 223161KE(B1-B4)

ASSEMBLY INSTRUCTIONS

ASSEMBLY TIPS :

1. Remove hardware from box and sort by size.
2. Please check to see that all hardware and parts are present prior to start of assembly.
3. Please follow attached instructions in the same sequence as numbered to assure fast & easy assembly.

WARNING !

1. Don't attempt to repair or modify parts that are broken or defective. Please contact the store immediately.
2. This product is for home use only and not intended for commercial establishments.

HARDWARE IDENTIFICATION

Z-B4 (BOX 4) - HARDWARE PACK IS LOCATED IN 223161KE(B4)

1	ALLEN WRENCH (Φ4 X 95mm- ZINC)		1PC
2	SHORT BOLT (Φ6 X 30mm - BLK)		4PCS
3	MEDIUM BOLT (Φ6 X 45mm - BLK)		22PCS
4	LONG BOLT (Φ6 X 60mm - BLK)		6PCS
5	FLAT HEAD SCREW (Φ4 X 32mm - BLK)		10PCS
6	LOCK WASHER (Φ6 -BLK)		22PCS
7	FLAT WASHER (Φ7 X 19mm X 2.0 - BLK)		22PCS

NOTE:

Phillips head screw driver is required in the assembly process; however, manufacturer does not provide this item.

ITEM: **223161KE(B1-B4)**

ASSEMBLY INSTRUCTIONS

STEP 1

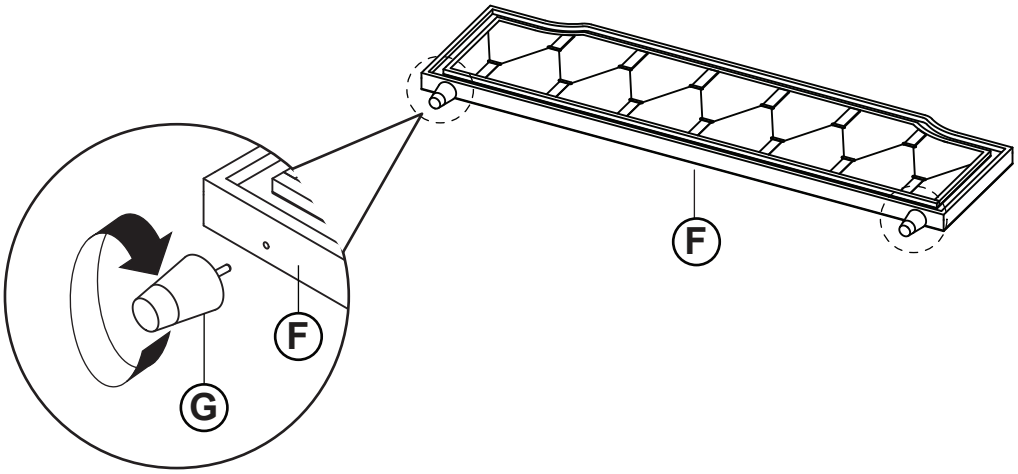

STEP 2

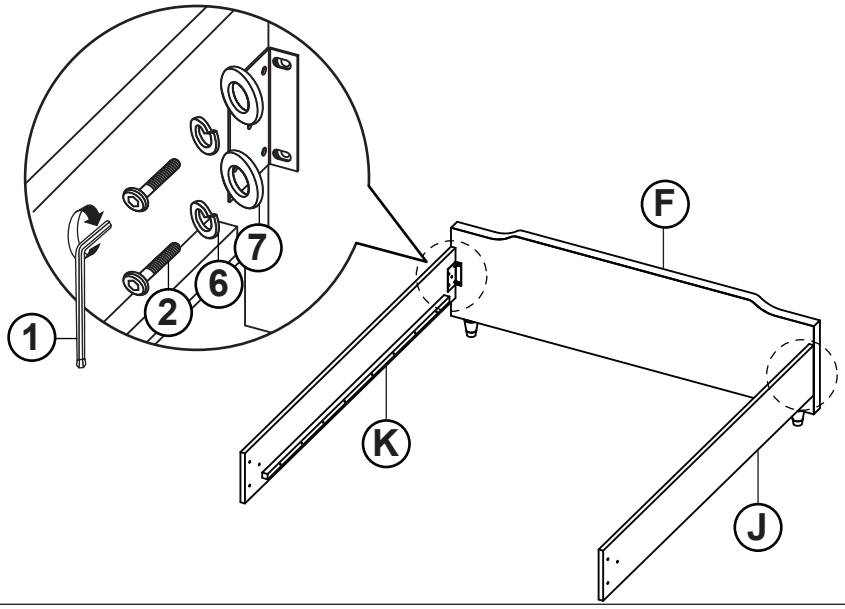

STEP 3

Hand tigthen all the bolts

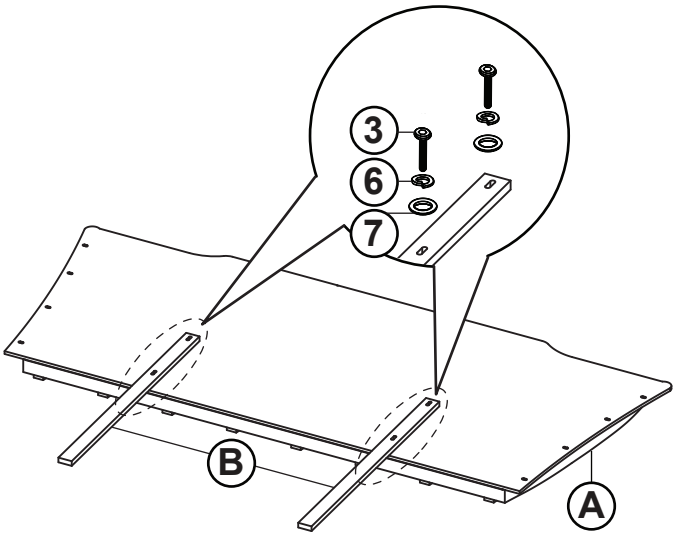

ITEM: **223161KE(B1-B4)**

ASSEMBLY INSTRUCTIONS

STEP 4

Hand tigthen all the bolts

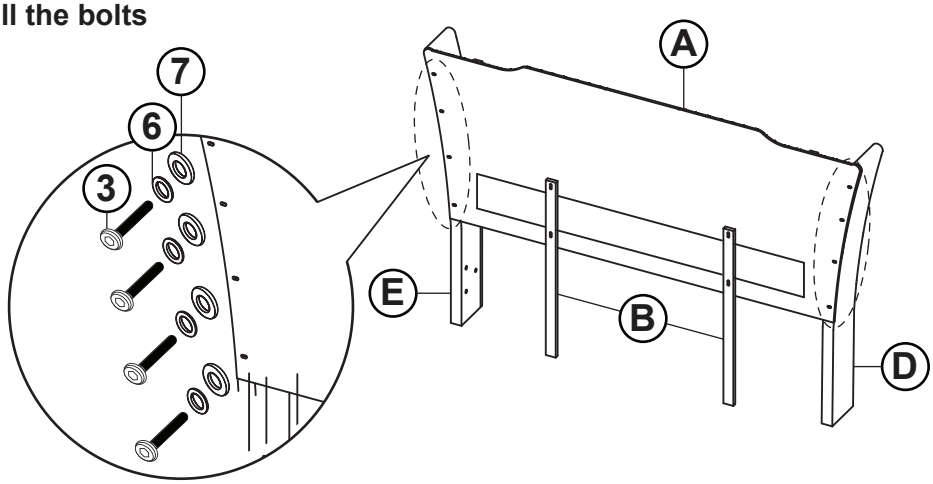

STEP 5

Fully tigthen all the bolts using Allen Wrench (1) at Step 3,4 & 5

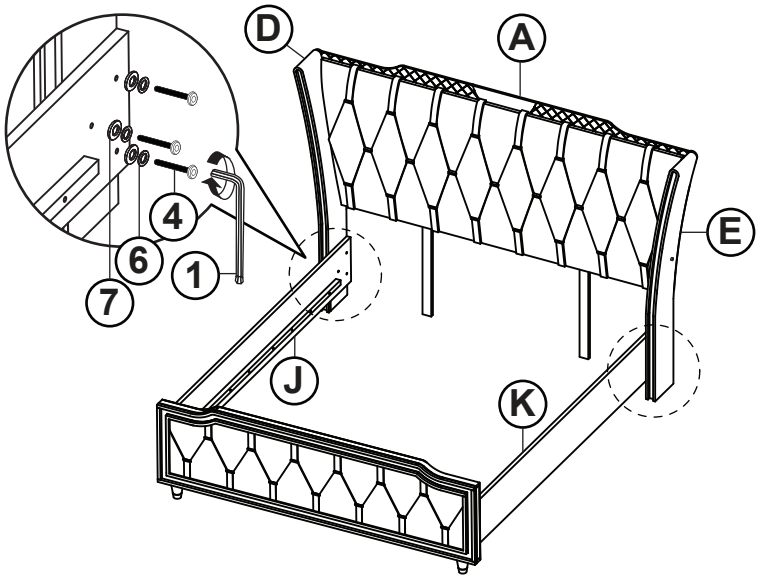

STEP 6

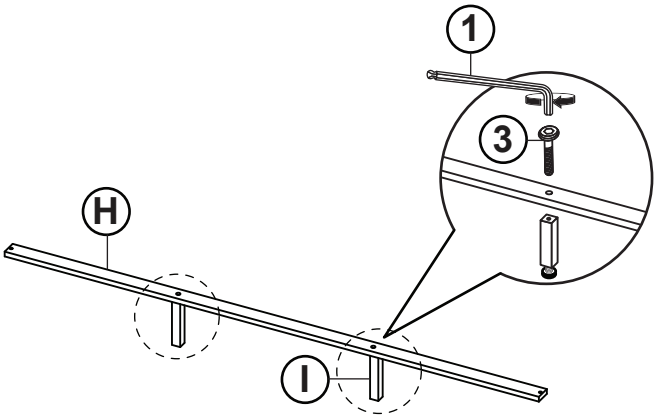

ITEM: **223161KE(B1-B4)**

ASSEMBLY INSTRUCTIONS

STEP 7

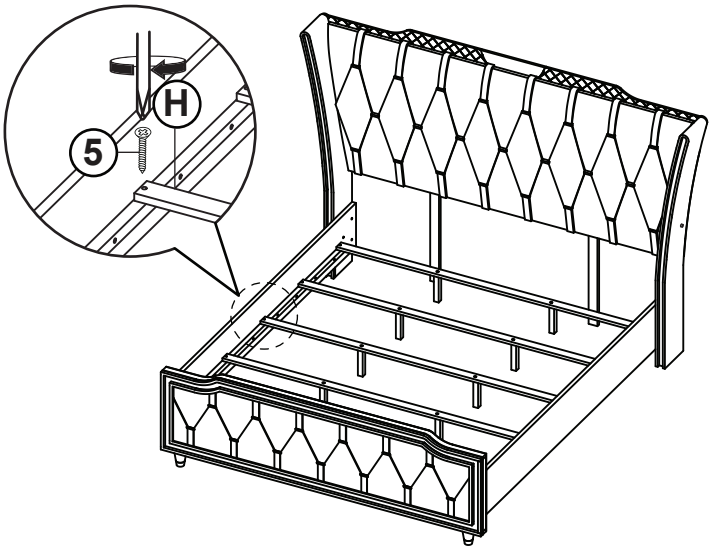

STEP 8

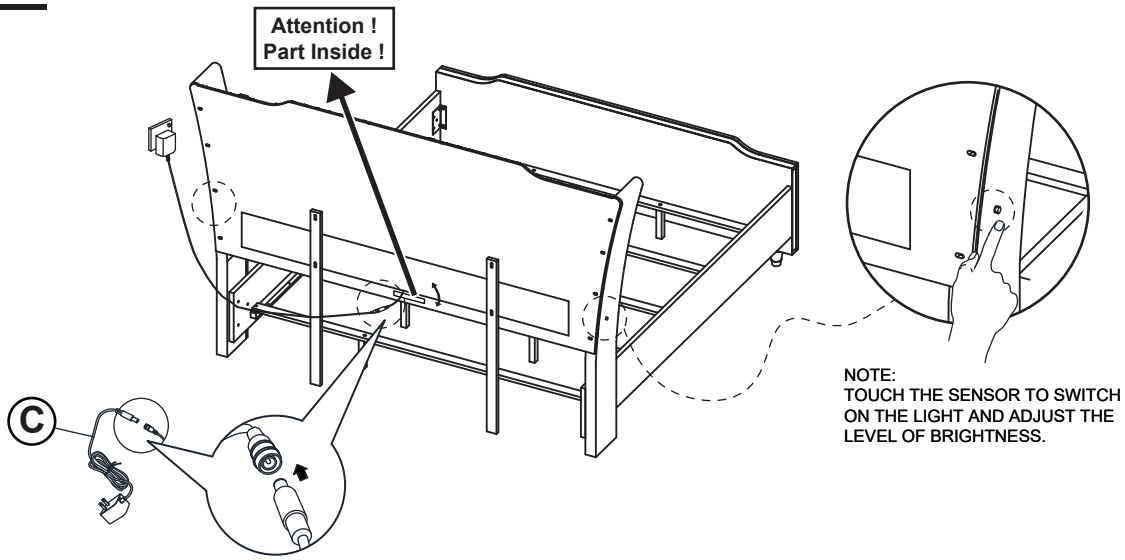

STEP 9
COMPLETE

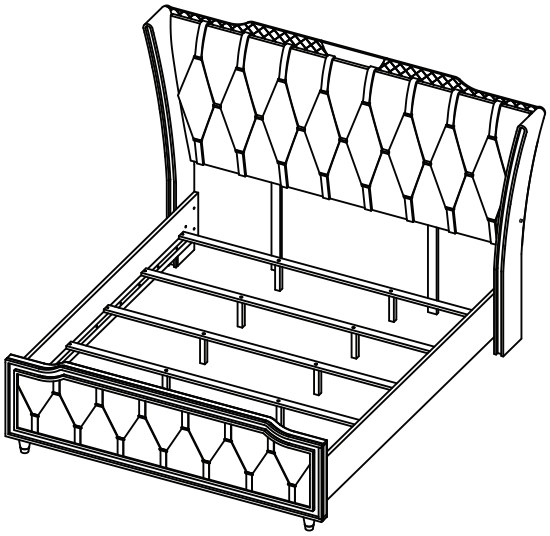

ITEM: **223161KE(B1-B4)**

Inner Size : 77.00"W x 80.75"D

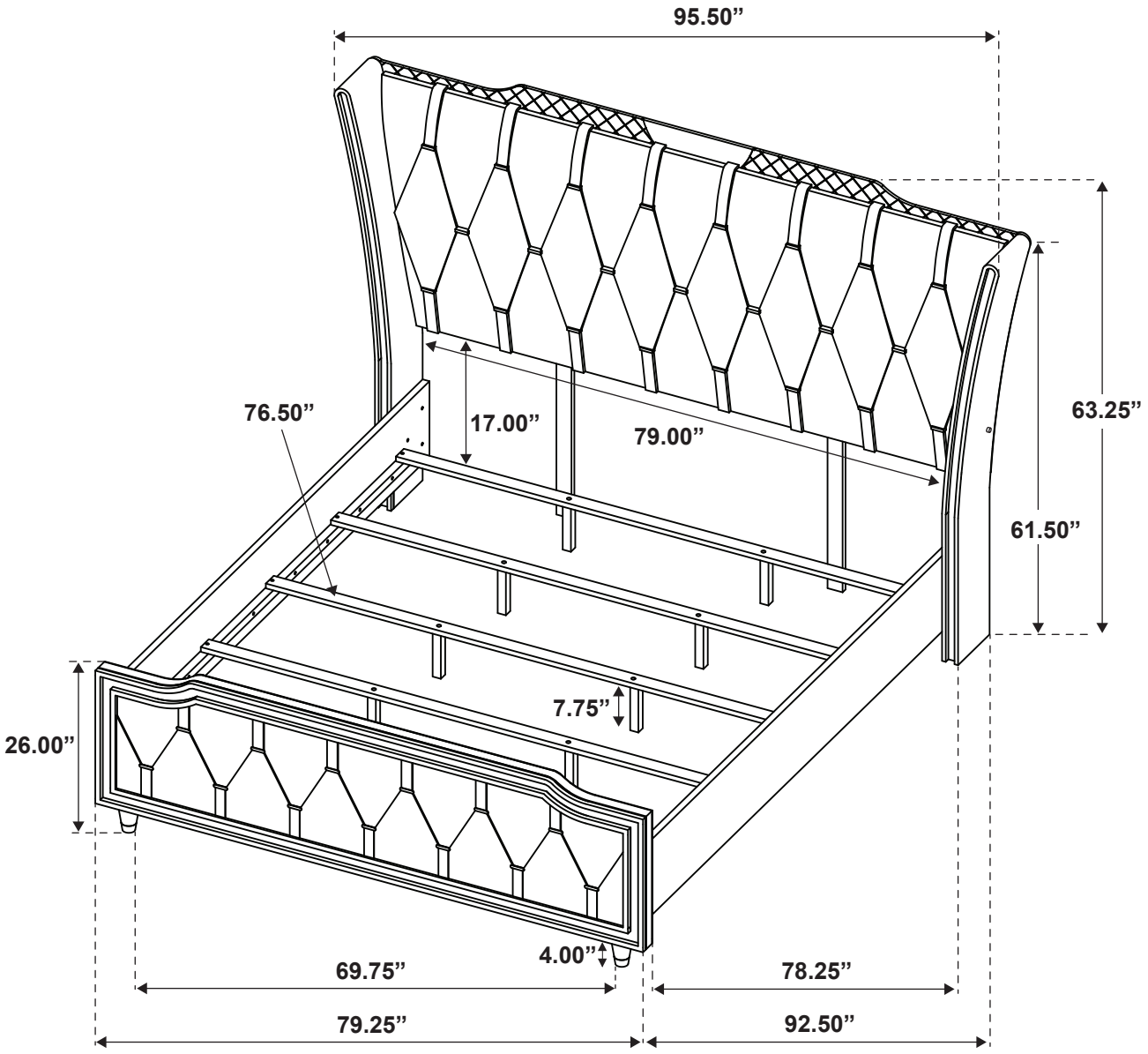

Note: Dimension tolerance ±5%

ASSEMBLY INSTRUCTIONS
COASTER FINE FURNITURE

Fine Furniture for every stage of life

223162
Nightstand

REVISION 0 : 09/23/2025

COASTERFURNITURE.COM

ITEM: **223162**

ASSEMBLY INSTRUCTIONS

ASSEMBLY TIPS:

1. Remove hardware from box and sort by size.
2. Please check to see that all hardware and parts are present prior to start of assembly.
3. Please follow attached instructions in the same sequence as numbered to assure fast & easy assembly.

WARNING!

1. Don't attempt to repair or modify parts that are broken or defective.Please contact the store immediately.
2. This product is for home use only and not intended for commercial establishments.

ASSEMBLY TIME	15 MINUTES

PARTS IDENTIFICATION

A	NIGHTSTAND	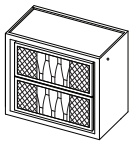	1PC
B	LEG		4PCS
C	GLASS TOP	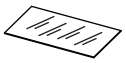	1PC
D	ADAPTER		1PC
E	USB ADAPTER		1PC

NOTE:

Phillips head screw driver is required in the assembly process; however, manufacturer does not provide this item.

ITEM: **223162**

ASSEMBLY INSTRUCTIONS

STEP 1

Lift the Glass-Top (C) gently and carefully place it at safe area before assembly begin.

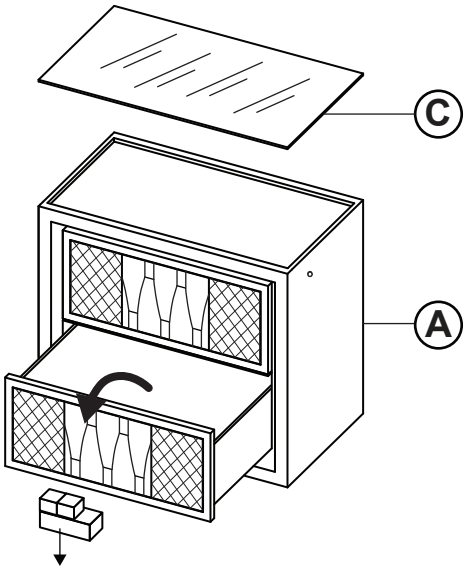

Leg (B)'s Box,
LED Adapter (D)'s Box and
USB Adapter (E)'s Box

STEP 2

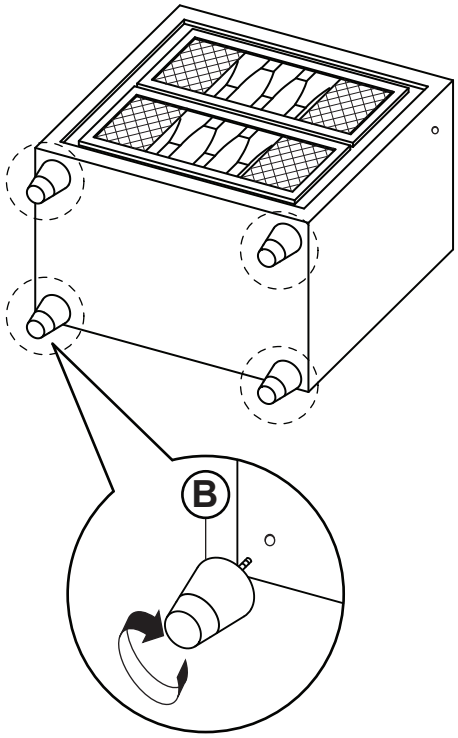

STEP 3

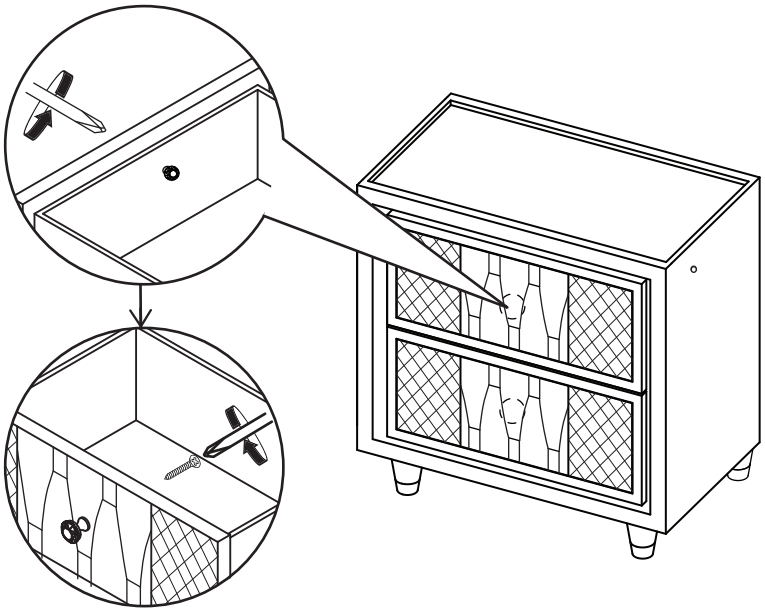

ITEM: **223162**

COASTER FINE FURNITURE

ASSEMBLY INSTRUCTIONS

STEP 4

Place the Glass-Top (C)
to the Top Surface of Nightstand (A).

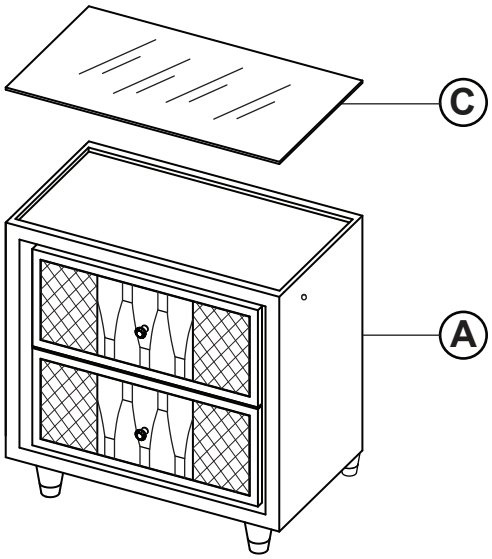

STEP 5

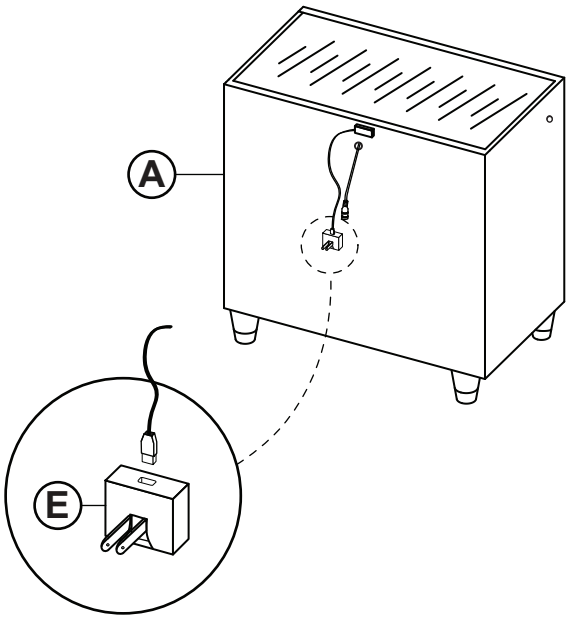

STEP 6

NOTE:
Touch the Sensor to
Switch on the Light and
Adjust the Level of Brightness.

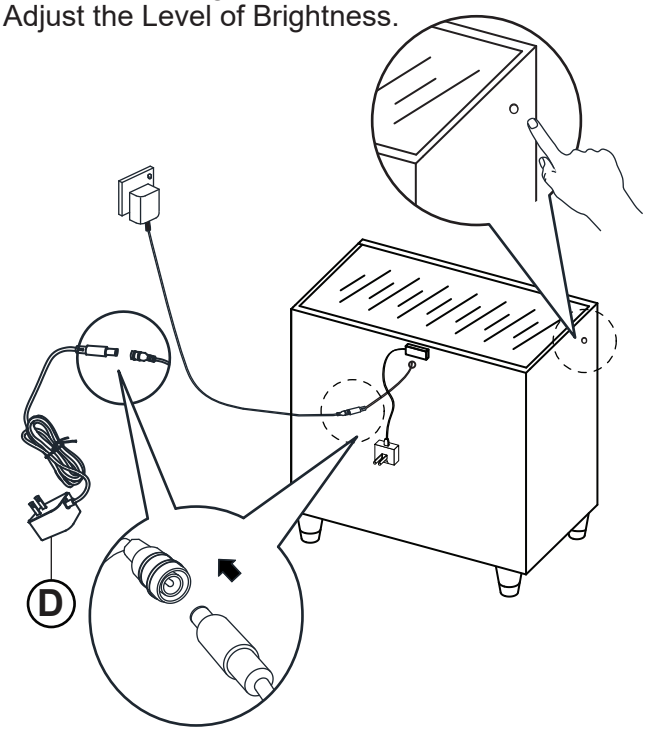

STEP 7

COMPLETE

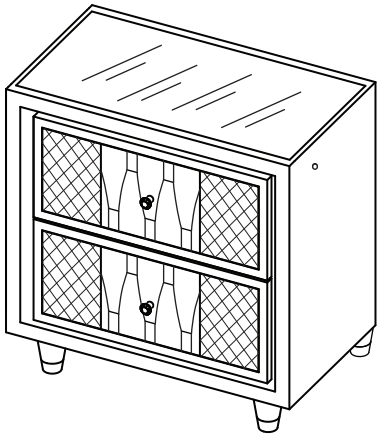

ITEM: **223162**

COASTER FINE FURNITURE

ANTI-TIPPING INSTALLMENT INSTRUCTIONS
FURNITURE TIPPING RESTRAINT

WARNING

Injury may result from tipping furniture.
This restraint may protect against tipping furniture.
Do not allow children to climb on furniture.
This restraint is not a substitute for proper adult supervision.
Failure to detach this restraint before moving the furniture may result in injury and damage.

This restraint must be screwed to a wood stud on the wall, using the long screw provided.

STEP 1

Secure the bracket to the back top of the unit, using the short screw provided, as shown in the drawing.

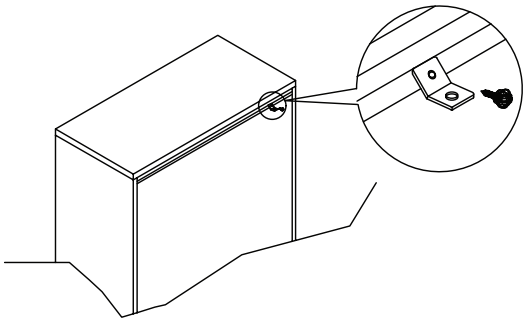

STEP 2

Locate the wood stud on the wall and secure the other bracket 2 inches below the back of the unit, using the long screw.

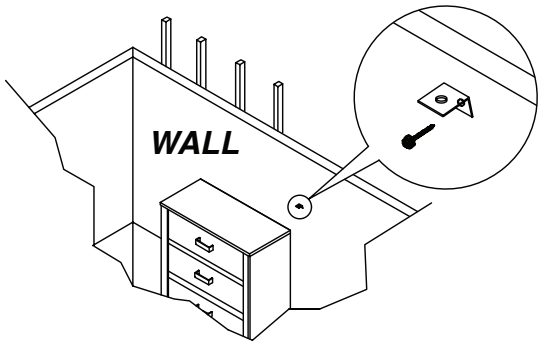

STEP 3

Place the furniture into position so both mounting brackets are vertically in line. Lace the threaded end of the restraint strap through the hole in each mounting bracket. Bring both ends together and rotate the thumb nut onto the threaded end until tight. Ensure that the restraint strap is securely laced and locked.

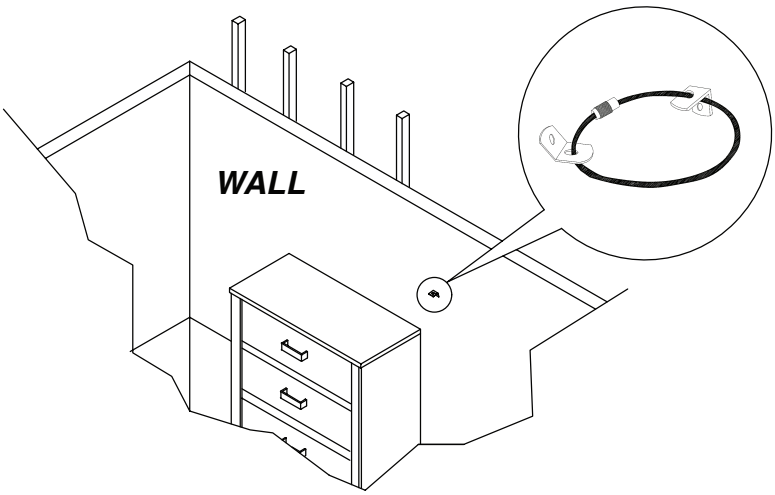

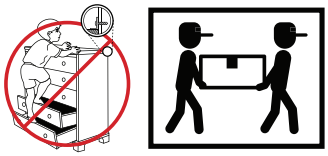

ITEM: **223162**

Inner Size of Drawer : 21.50"W x 12.50"D x 5.25"H x 0.25"T

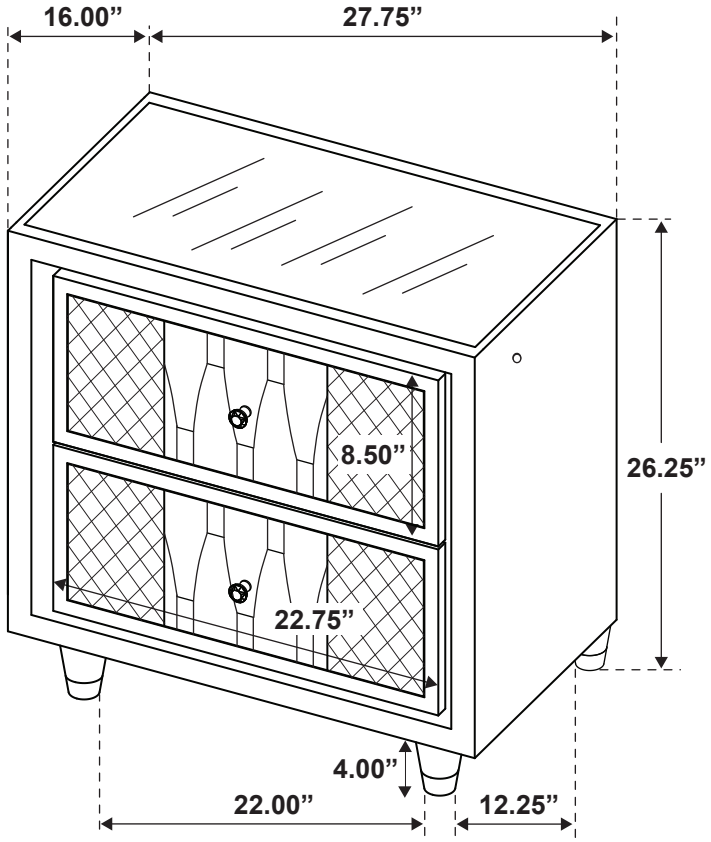

Note: Dimension tolerance ±5%

ASSEMBLY INSTRUCTIONS
COASTER FINE FURNITURE

Fine Furniture for every stage of life

223163
Dresser

REVISION 0 : 09/23/2025

COASTERFURNITURE.COM

ITEM: **223163**

ASSEMBLY INSTRUCTIONS

ASSEMBLY TIPS:

1. Remove hardware from box and sort by size.
2. Please check to see that all hardware and parts are present prior to start of assembly.
3. Please follow attached instructions in the same sequence as numbered to assure fast & easy assembly.

WARNING!

1. Don't attempt to repair or modify parts that are broken or defective.Please contact the store immediately.
2. This product is for home use only and not intended for commercial establishments.

ASSEMBLY TIME	15 MINUTES

PARTS IDENTIFICATION

A	DRESSER	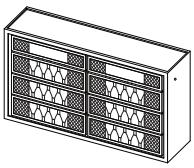	1PC
B	LEG		4PCS
C	GLASS TOP	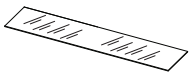	1PC
D	CENTER LEG SUPPORT WITH LEVELER		1PC
E	ADAPTER		1PC

NOTE:

Phillips head screw driver is required in the assembly process; however, manufacturer does not provide this item.

ITEM: **223163**

ASSEMBLY INSTRUCTIONS

STEP 1

Lift the Glass Top (C) gently and carefully place it at safe area before assembly begin.

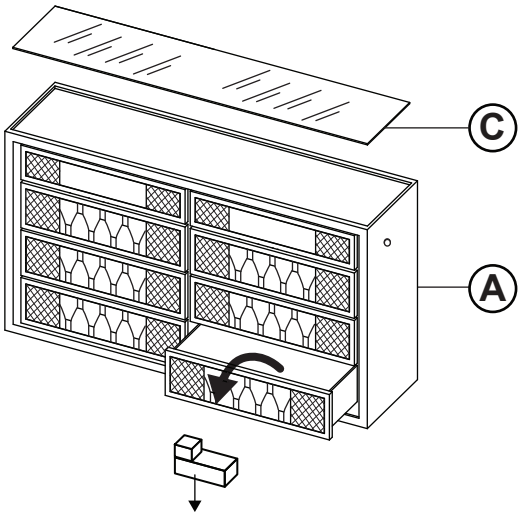

Leg (B)'s Box and
LED Adapter (E)'s Box

STEP 2

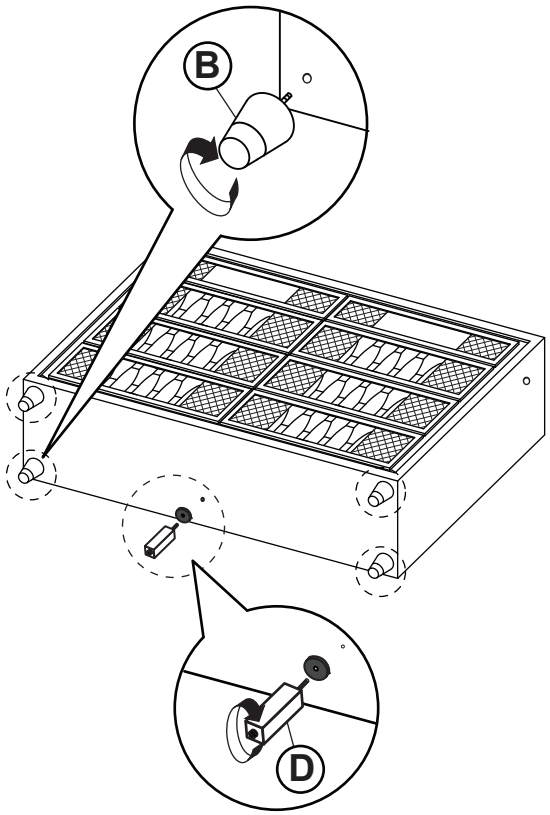

STEP 3

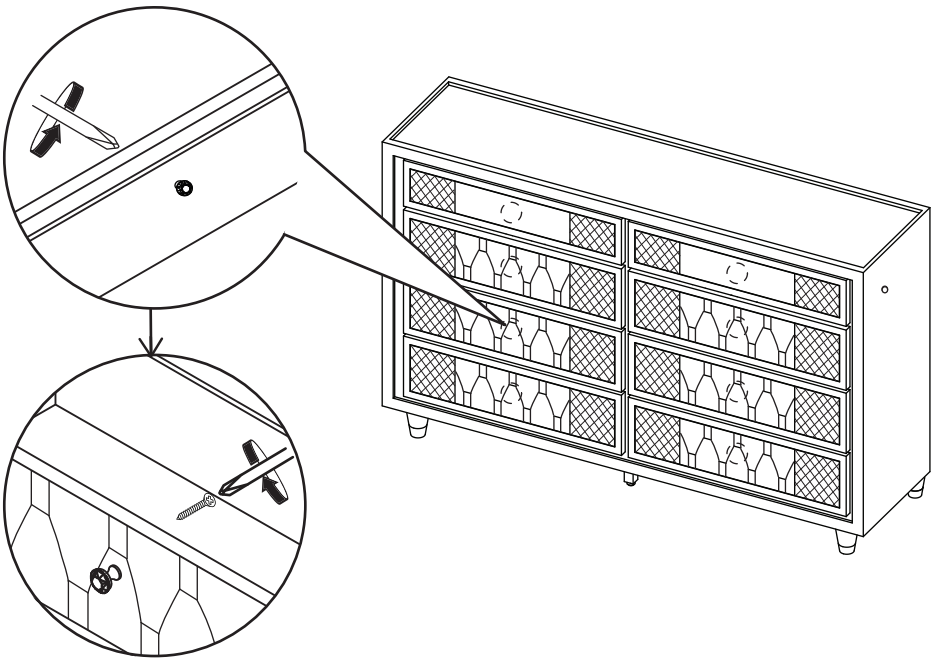

ITEM: **223163**

COASTER FINE FURNITURE

ASSEMBLY INSTRUCTIONS

STEP 4

Place the Glass Top (C) to the top surface of Dresser (A).

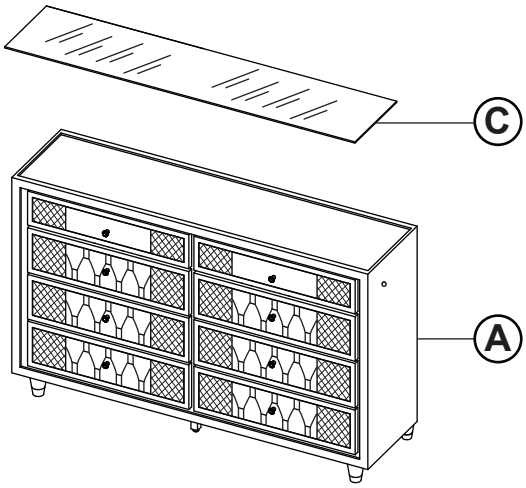

STEP 5

NOTE:
Touch the sensor to switch on the light and adjust the level of brightness.

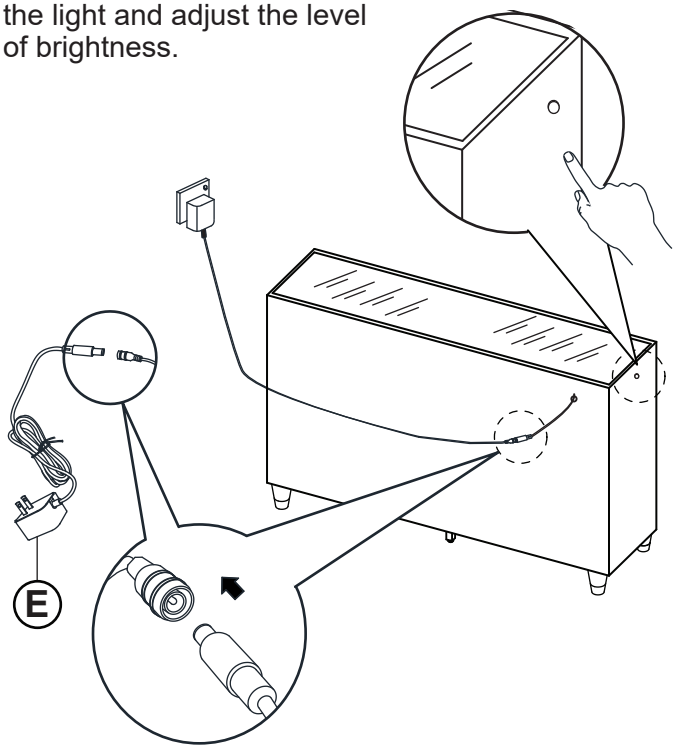

STEP 6

COMPLETE

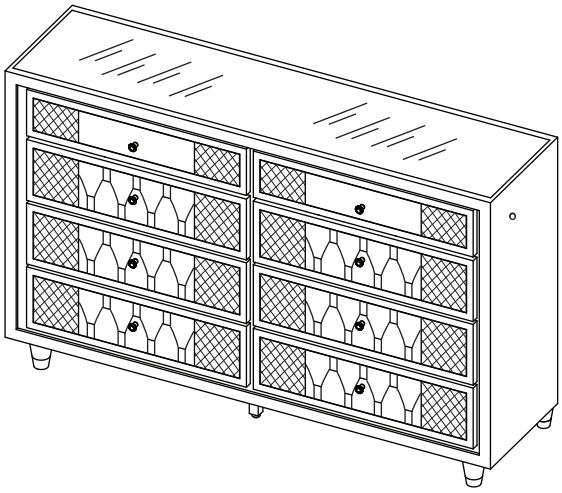

ITEM: **223163**

COASTER FINE FURNITURE

ANTI-TIPPING INSTALLMENT INSTRUCTIONS

FURNITURE TIPPING RESTRAINT

WARNING

Injury may result from tipping furniture.
This restraint may protect against tipping furniture.
Do not allow children to climb on furniture.
This restraint is not a substitute for proper adult supervision.
Failure to detach this restraint before moving the furniture may result in injury and damage.

This restraint must be screwed to a wood stud on the wall, using the long screw provided.

STEP 1

Secure the bracket to the back top of the unit, using the short screw provided, as shown in the drawing.

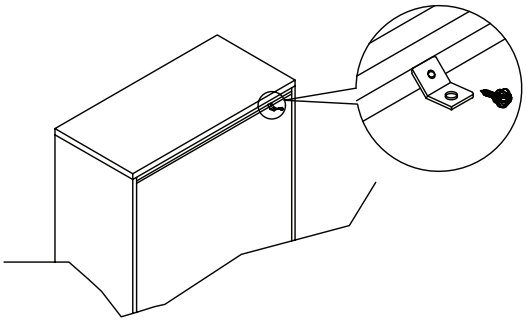

STEP 2

Locate the wood stud on the wall and secure the other bracket 2 inches below the back of the unit, using the long screw.

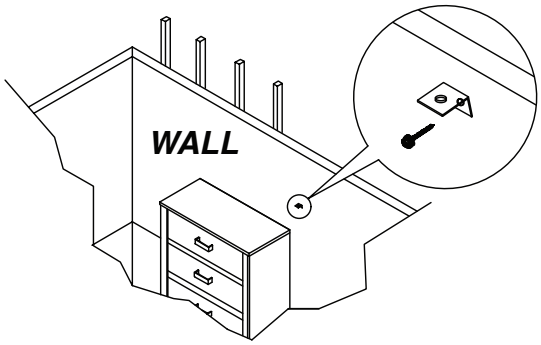

STEP 3

Place the furniture into position so both mounting brackets are vertically in line. Lace the threaded end of the restraint strap through the hole in each mounting bracket. Bring both ends together and rotate the thumb nut onto the threaded end until tight. Ensure that the restraint strap is securely laced and locked.

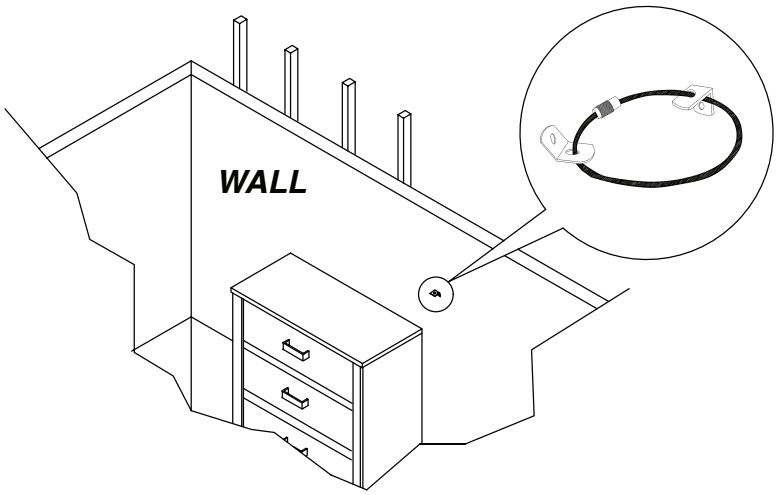

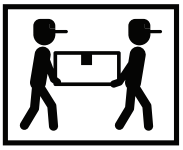

ITEM: **223163**

COASTER FINE FURNITURE

Inner Size of Drawer A: 25.50"W x 12.25"D x 2.50"H x 0.50"T
Inner Size of Drawer B: 25.75"W x 12.50"D x 5.25"H x 0.25"T

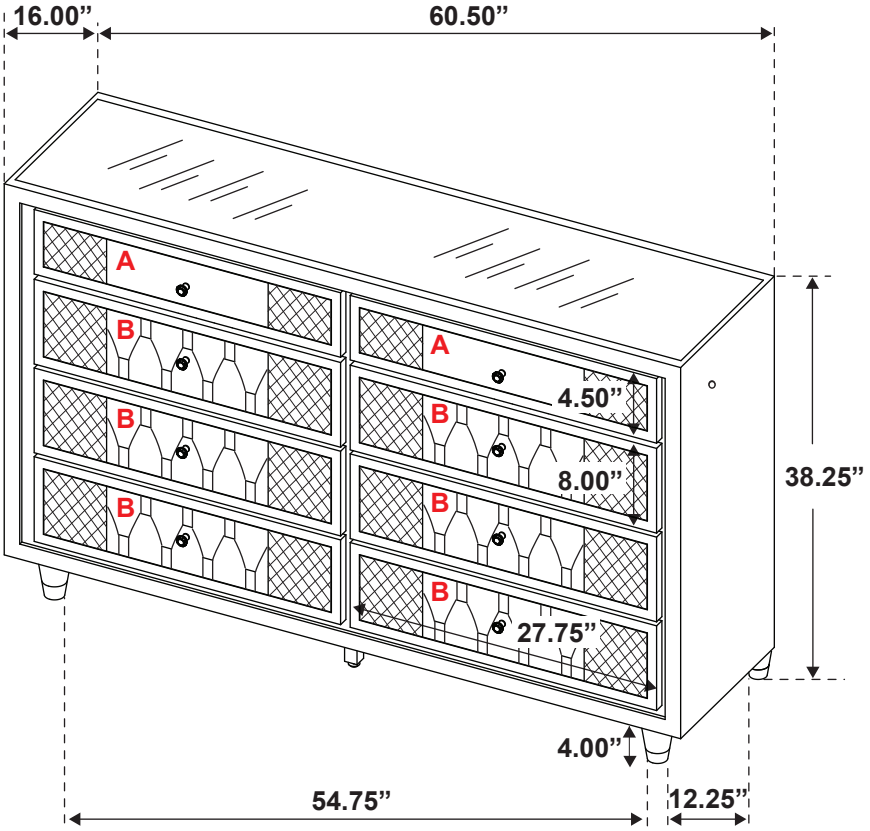

Note: Dimension tolerance ±5%

ASSEMBLY INSTRUCTIONS
COASTER FINE FURNITURE

Fine Furniture for every stage of life

223164
Mirror

REVISION 0 : 09/23/2025

COASTERFURNITURE.COM

ITEM: **223164**

ASSEMBLY INSTRUCTIONS

ASSEMBLY TIPS:

1. Remove hardware from box and sort by size.
2. Please check to see that all hardware and parts are present prior to start of assembly.
3. Please follow attached instructions in the same sequence as numbered to assure fast & easy assembly.

WARNING!

1. Don't attempt to repair or modify parts that are broken or defective.Please contact the store immediately.
2. This product is for home use only and not intended for commercial establishments.

ASSEMBLY TIME	15 MINUTES

PARTS IDENTIFICATION

A	MIRROR		1PC
B	MIRROR SUPPORT (PACKED WITH MIRROR)		2PCS
C	DRESSER *FROM BOX ITEM #223163FB or DRESSER *FROM BOX ITEM #223163	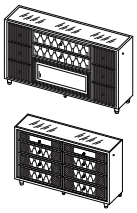	1PC
D	ADAPTER		1PC

HARDWARE IDENTIFICATION

1	ALLEN WRENCH (Φ4 X 95mm - ZINC)		1PC
2	BOLT (Φ6 X 35mm - BLK)		8PCS
3	LOCK WASHER (Φ6 - BLK)		8PCS
4	FLAT WASHER (Φ7 X 19mm X 2.0 - BLK)		8PCS

NOTE:

Phillips head screw driver is required in the assembly process; however, manufacturer does not provide this item.

ITEM: **223164**

ASSEMBLY INSTRUCTIONS

STEP 1

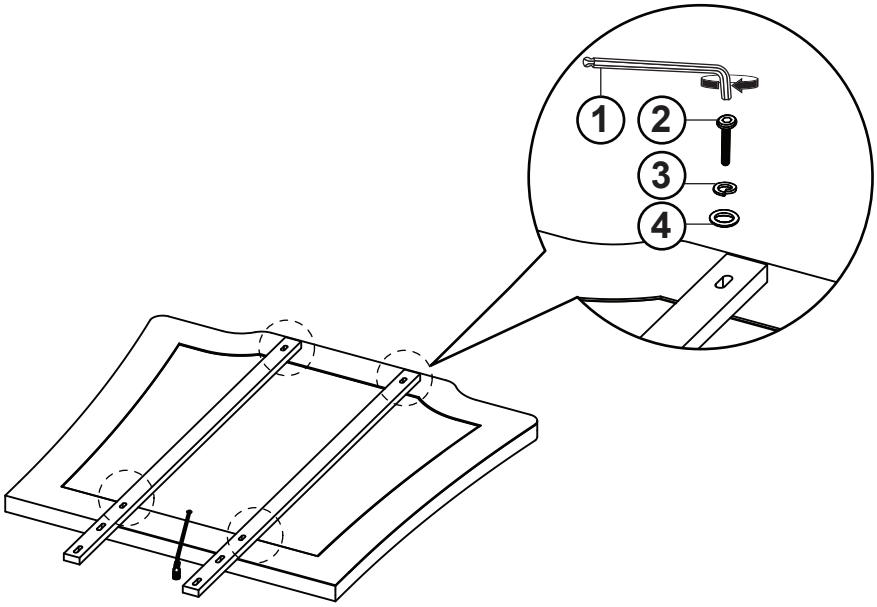

*Back View

STEP 2

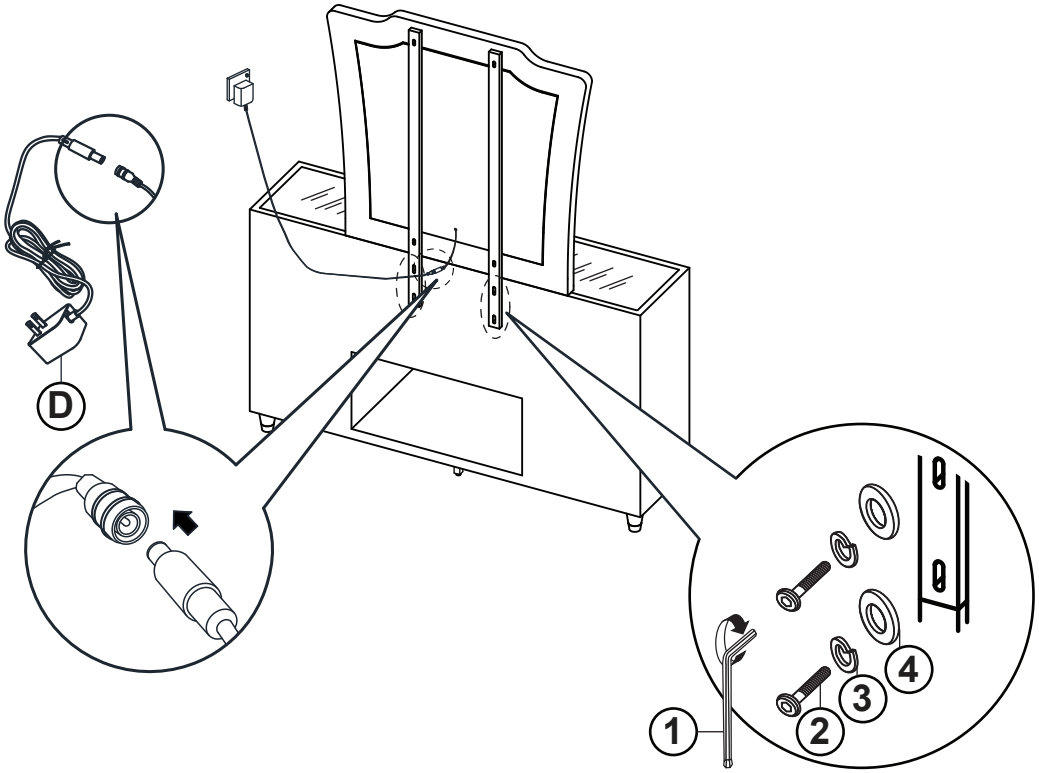

ITEM: **223164**

ASSEMBLY INSTRUCTIONS

STEP 3

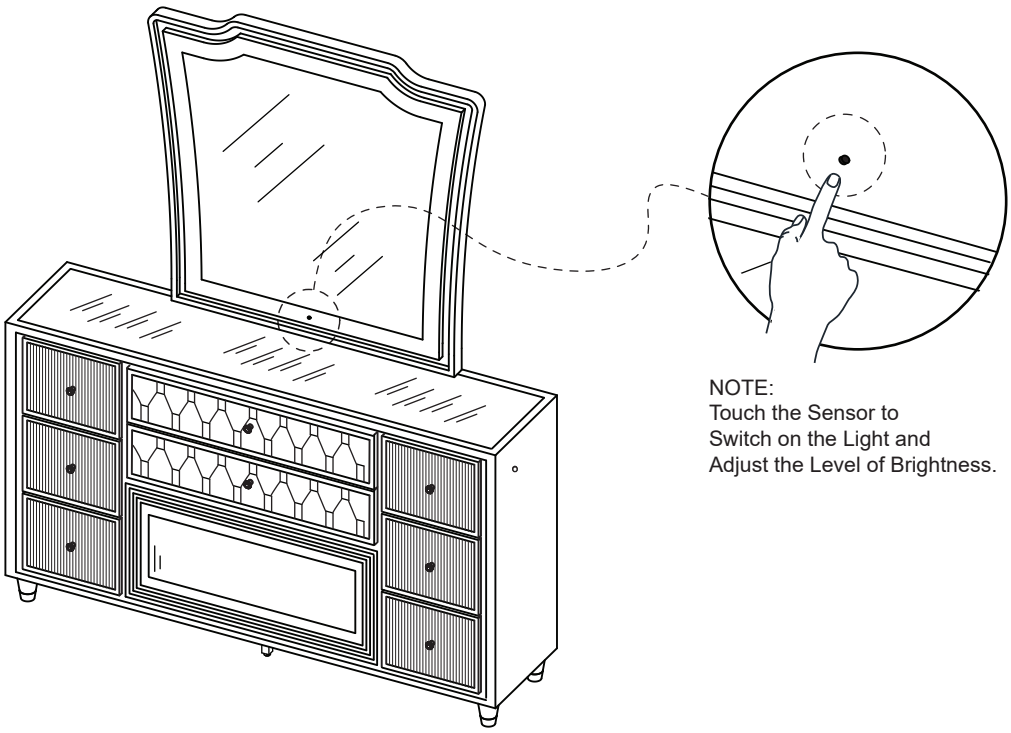

NOTE:
Touch the Sensor to
Switch on the Light and
Adjust the Level of Brightness.

STEP 4
COMPLETE

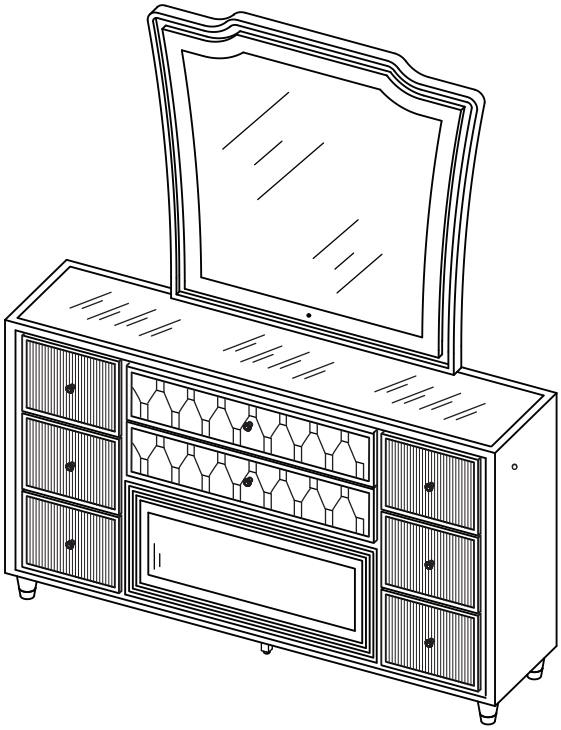

ITEM: **223164**

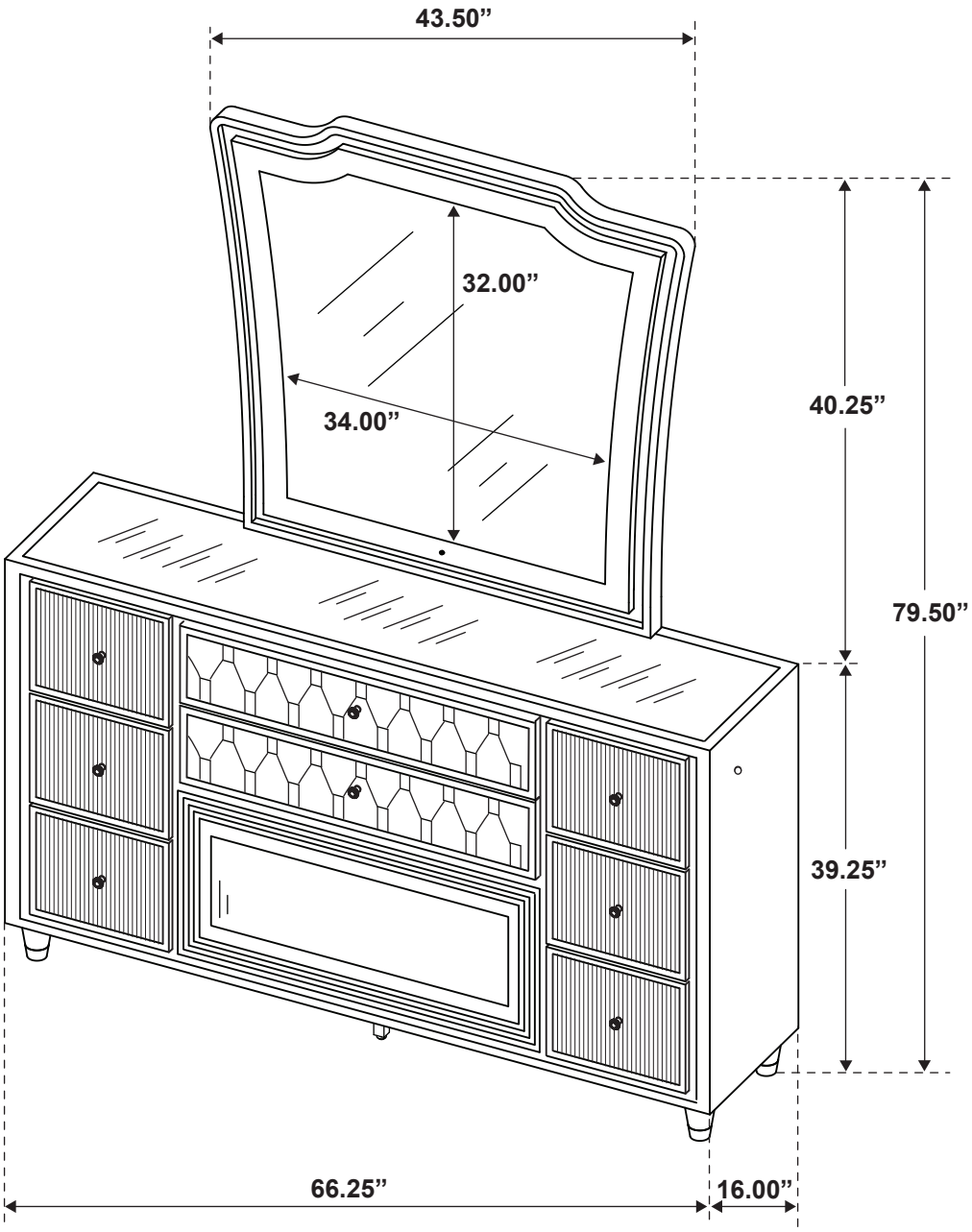

Note: Dimension tolerance ±5%

ITEM: **223164**

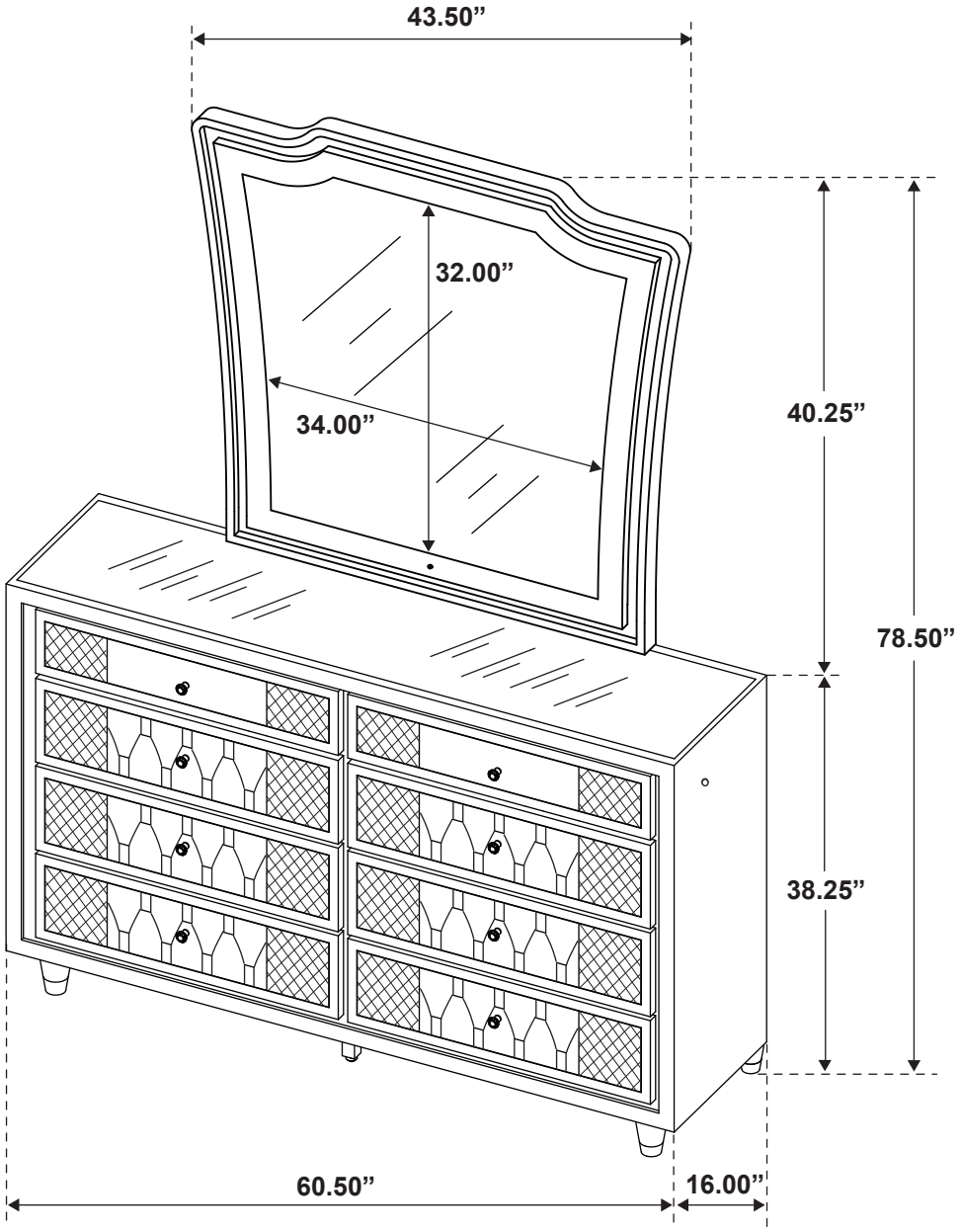

Note: Dimension tolerance ±5%

ASSEMBLY INSTRUCTIONS
COASTER FINE FURNITURE

Fine Furniture for every stage of life

223165
Chest

REVISION 0 : 09/23/2025

COASTERFURNITURE.COM

ITEM: **223165**

ASSEMBLY INSTRUCTIONS

ASSEMBLY TIPS:

1. Remove hardware from box and sort by size.
2. Please check to see that all hardware and parts are present prior to start of assembly.
3. Please follow attached instructions in the same sequence as numbered to assure fast & easy assembly.

WARNING!

1. Don't attempt to repair or modify parts that are broken or defective.Please contact the store immediately.
2. This product is for home use only and not intended for commercial establishments.

ASSEMBLY TIME	15 MINUTES

PARTS IDENTIFICATION

A	CHEST	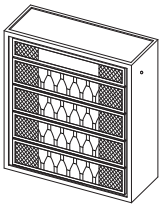	1PC
B	LEG		4PCS
C	GLASS TOP	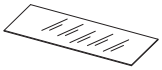	1PC
D	ADAPTER		1PC

NOTE:

Phillips head screw driver is required in the assembly process; however, manufacturer does not provide this item.

ITEM: **223165**

ASSEMBLY INSTRUCTIONS

STEP 1

Lift the Glass Top (C) gently and carefully place it at safe area before assembly begin.

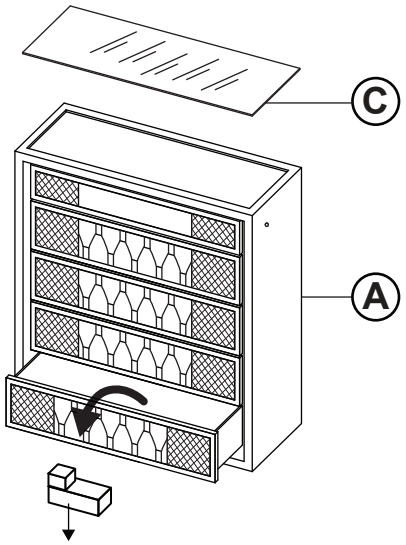

Leg (B)'s Box and
LED Adapter (D)'s Box

STEP 2

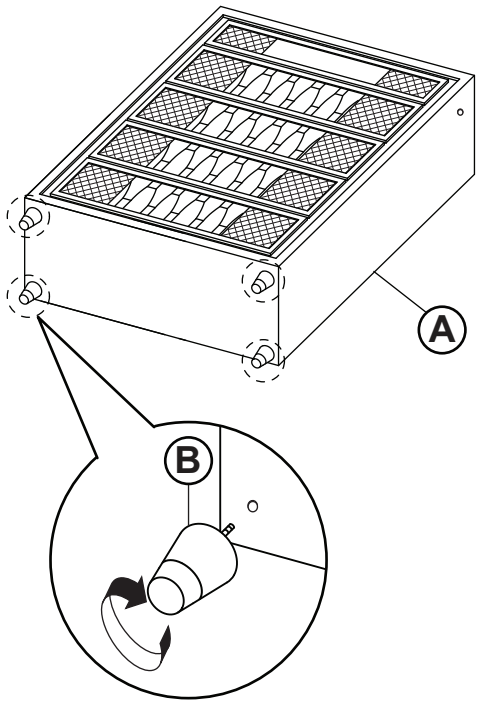

STEP 3

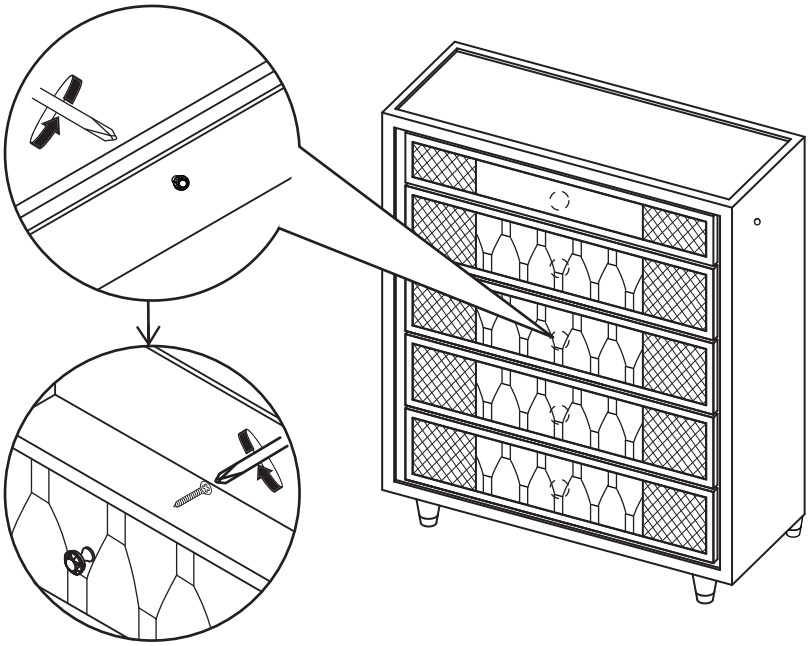

ITEM: **223165**

ASSEMBLY INSTRUCTIONS

STEP 4

Place the Glass Top (C) to the top surface of Dresser (A).

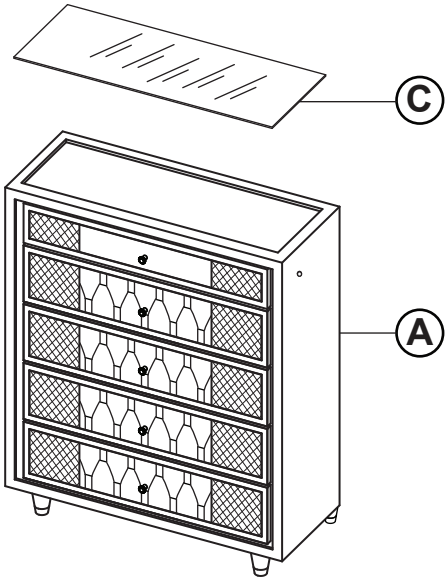

STEP 5

NOTE:
Touch the sensor to switch on the light and adjust the level of brightness.

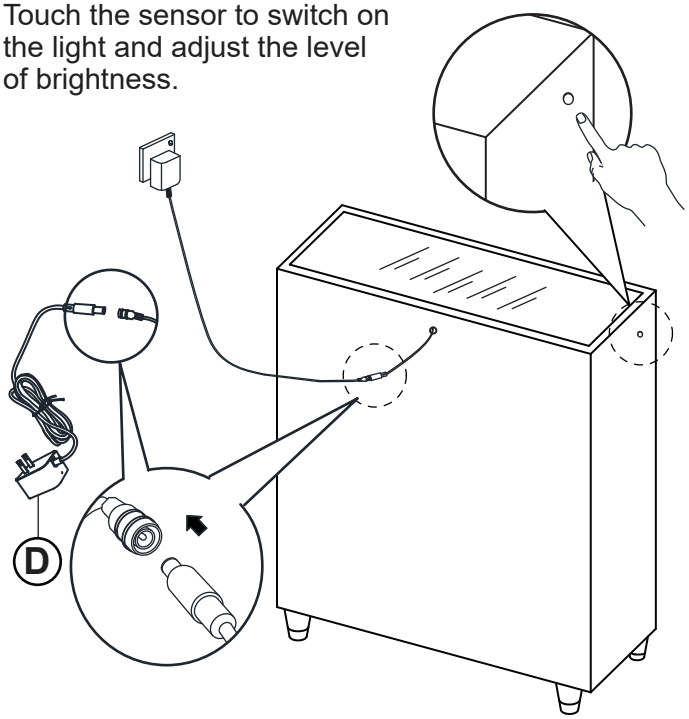

STEP 6

COMPLETE

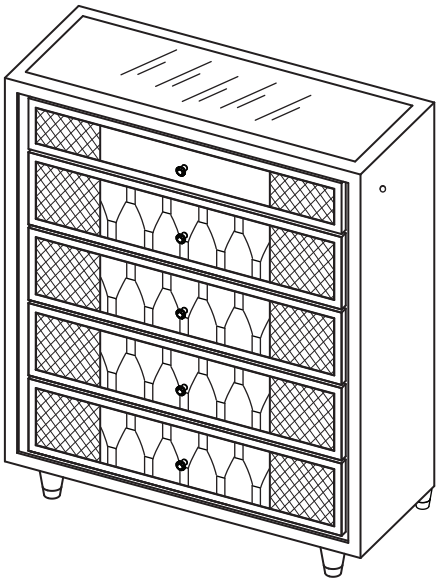

ITEM: **223165**

COASTER FINE FURNITURE

ANTI-TIPPING INSTALLMENT INSTRUCTIONS

FURNITURE TIPPING RESTRAINT

WARNING

Injury may result from tipping furniture.
This restraint may protect against tipping furniture.
Do not allow children to climb on furniture.
This restraint is not a substitute for proper adult supervision.
Failure to detach this restraint before moving the furniture may result in injury and damage.

This restraint must be screwed to a wood stud on the wall, using the long screw provided.

STEP 1

Secure the bracket to the back top of the unit, using the short screw provided, as shown in the drawing.

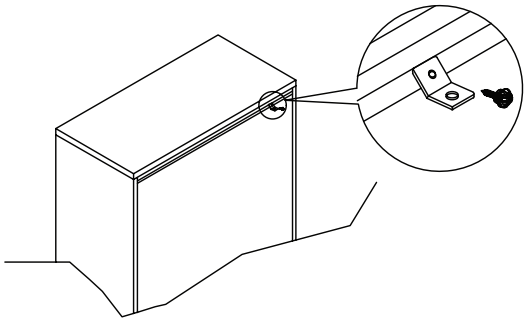

STEP 2

Locate the wood stud on the wall and secure the other bracket 2 inches below the back of the unit, using the long screw.

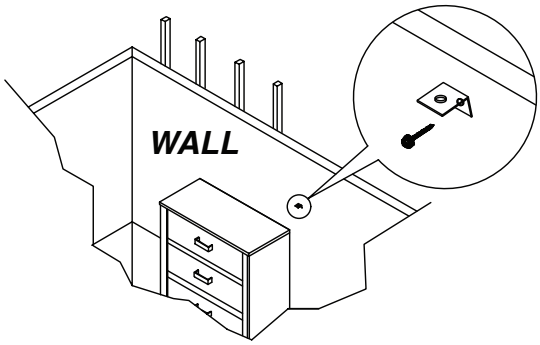

STEP 3

Place the furniture into position so both mounting brackets are vertically in line. Lace the threaded end of the restraint strap through the hole in each mounting bracket. Bring both ends together and rotate the thumb nut onto the threaded end until tight. Ensure that the restraint strap is securely laced and locked.

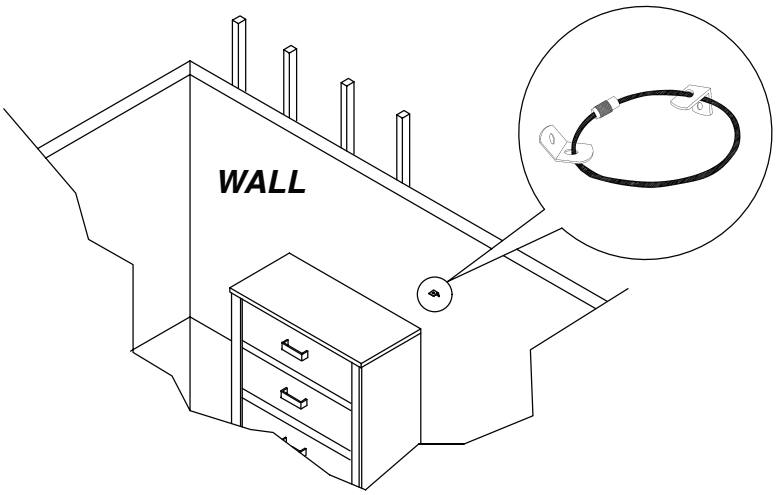

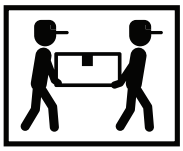

ITEM: **223165**

COASTER FINE FURNITURE

Inner Size of Drawer A: 33.75"W x 12.25"D x 2.50"H x 0.50"T
Inner Size of Drawer B: 34.00"W x 12.50"D x 5.25"H x 0.25"T

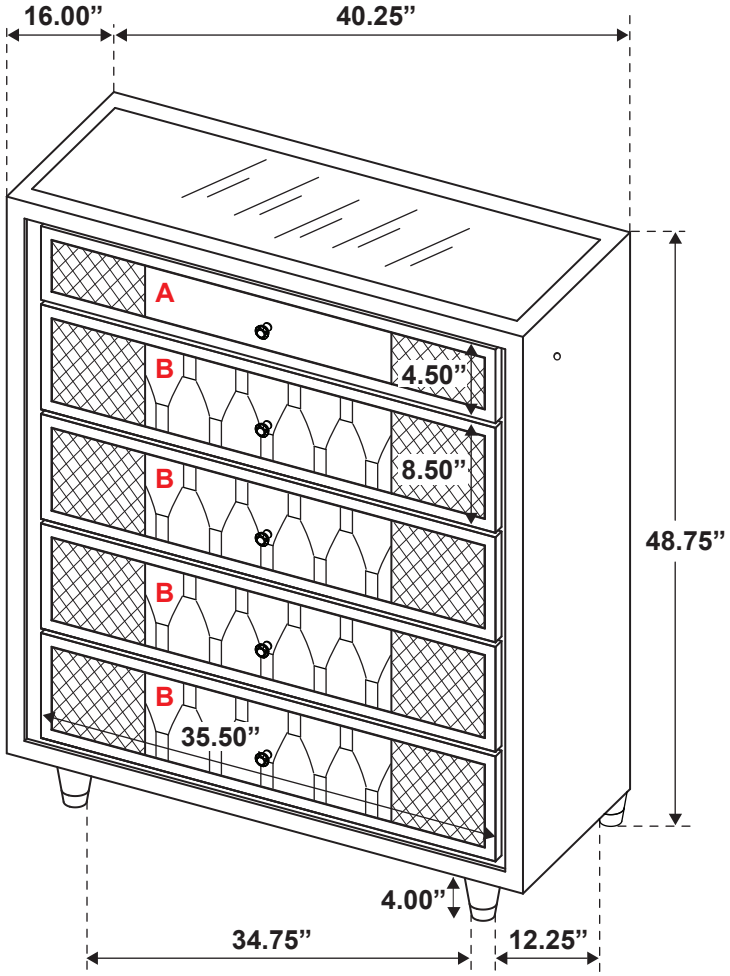

Note: Dimension tolerance ±5%