Thank You For Shopping

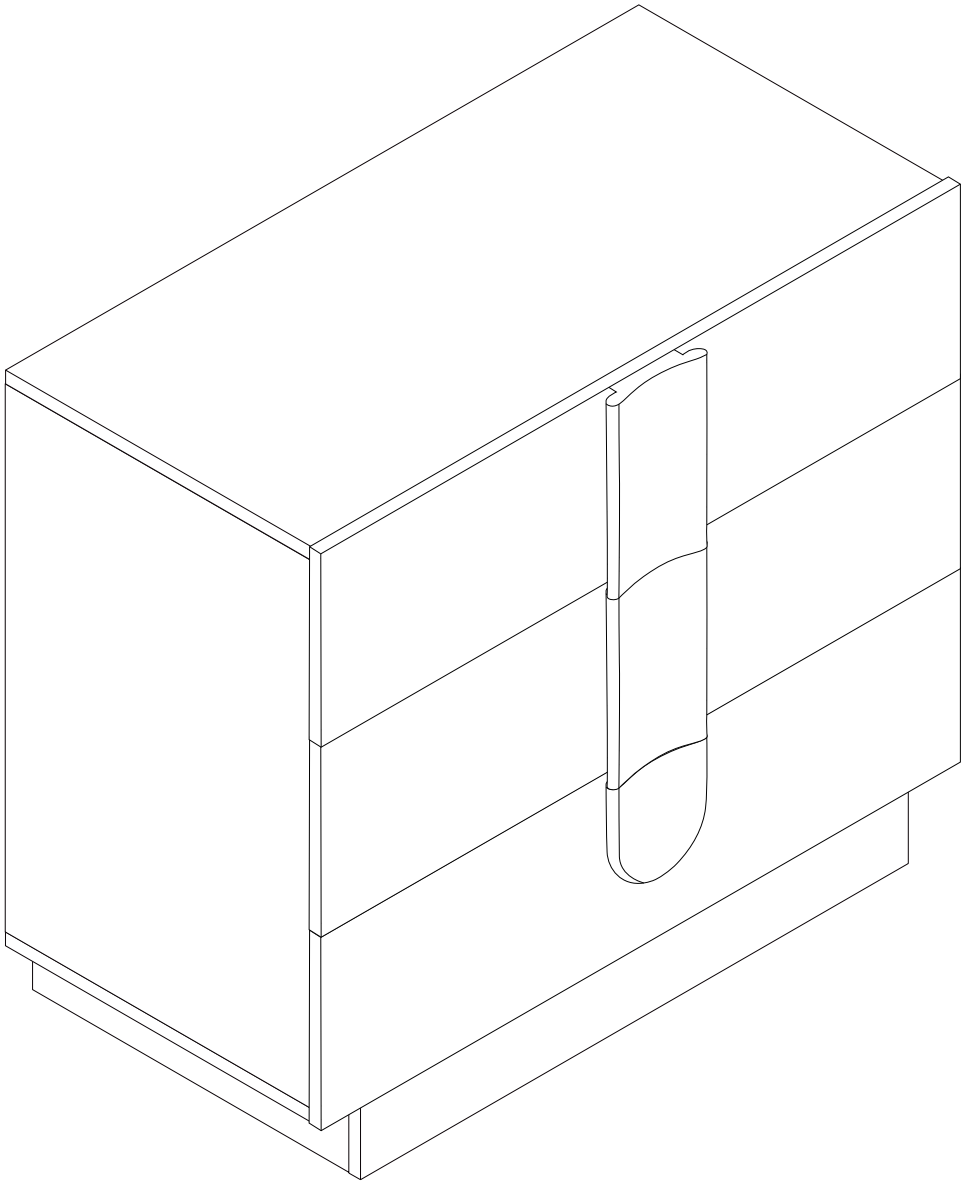

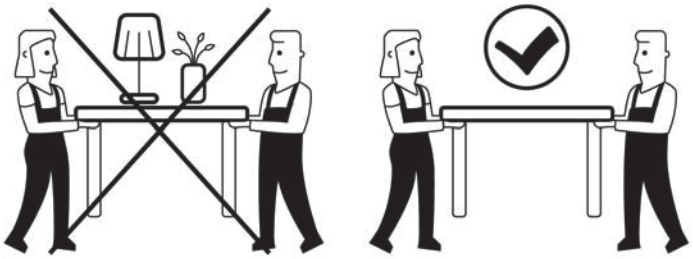

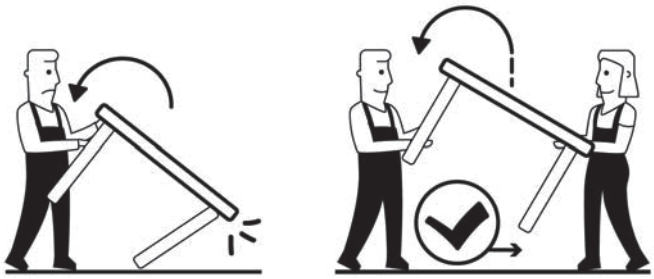

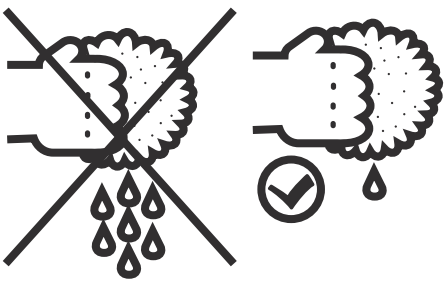

Component parts supplied

Ref	Dimensions	Visual	Qty
1	31.5x15.3in		1
2	31.5x15.3in		1
3	23.6x15.3in		1
4	23.6x15.3in		1
5	30.2x1.4in		1
6	30.2x2.3in		2
7	30.2x2.3in		1
8	30.6x11in		1
9	30.6x11in		1
10	29.1x3.1in		1
11	29.1x3.1in		1
12	13.4x3.1in		2

Ref	Dimensions	Visual	Qty
13	13.4x3.1in		1
14	28.8x11.7in		3
15	11.8x5.8in		3
16	28.5x5.8in		3
17	11.8x5.8in		3
18	11.3x2.4in		3
19	31.5x8.1in		1
20	31.5x8.1in		1
21	31.5x8.1 in		1

Parts and fittings

Fittings

Please check you have all the fittings listed below with your product.

A	B	C	D	E	F
M5*35mm Cam Lock Screw	Ø15*10mm Cam Lock	Ø8*30mm Dowel	M3.5*12mm Screw	M3*12mm Screw	Plastic Buckle
53pcs+4pcs extra	53pcs+4pcs extra	14pcs+1pc extra	36pcs+3pcs extra	8pcs	8pcs

G	H	I	J	K	L
M4*40mm Screw	M8*40mm Wall Anchor	Slide	Slide	M4*30mm Screw	M4*14mm Screw
6pcs	2pcs	6pcs	6pcs	21pcs+2pcs extra	2pcs

M	N	O
Wall Bracket	M4*12mm Screw	Mat
2pcs	2pcs	4pcs

CAM-LOCK

Tighten until shoulder is flush with panel. Do not overtighten or undertighten(see example below)

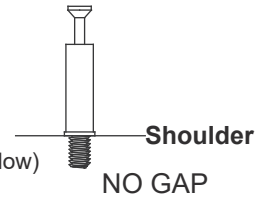

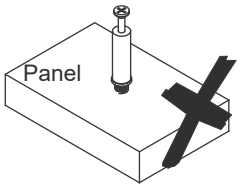

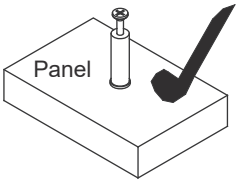

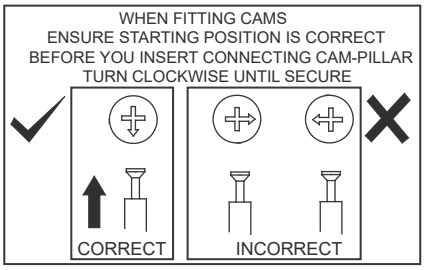

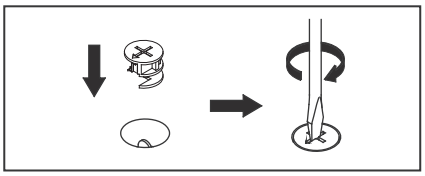

Exploded view

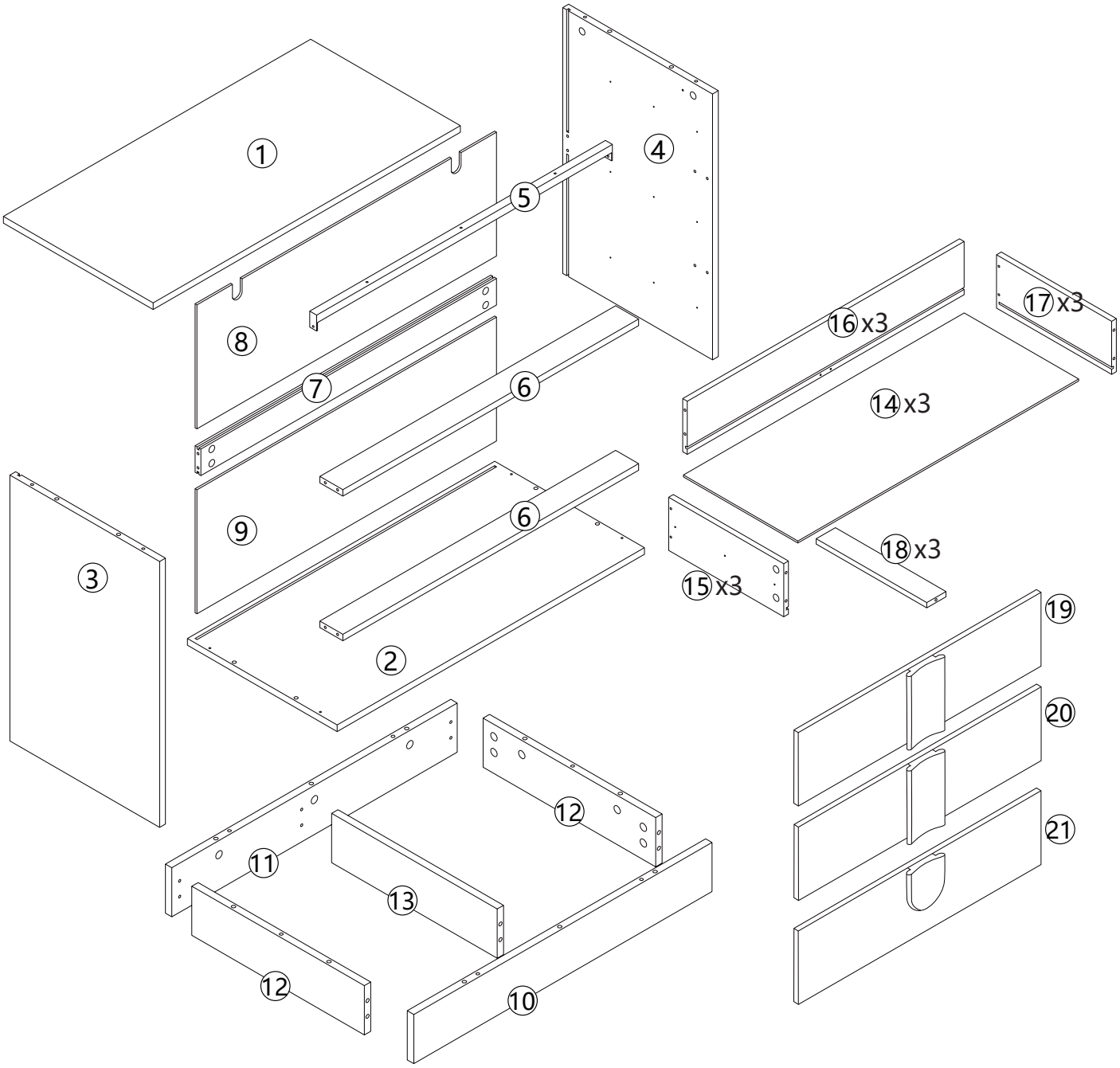

Step 1:

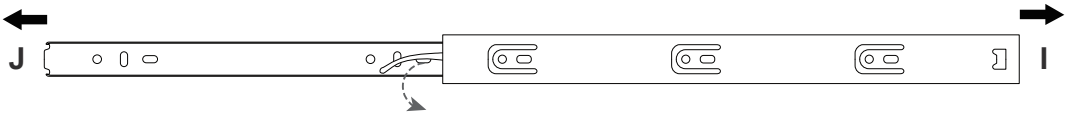

Note: to separate Part J from Part I press the black clip and slide Part J out.

Need to assemble drawer runner in the correct pilot hole as the diagram indicates.

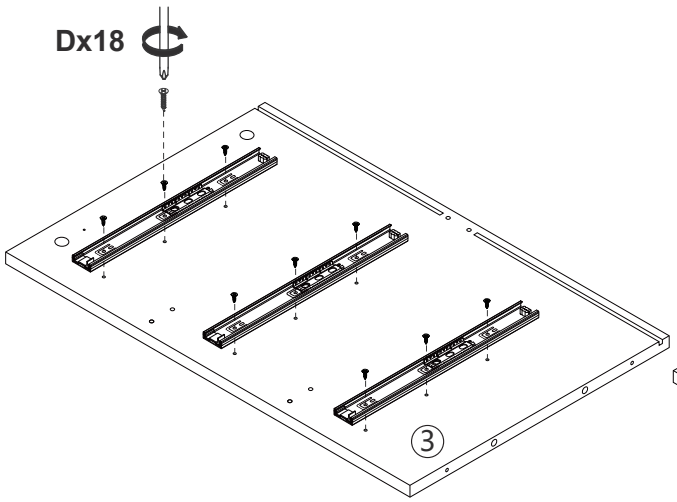

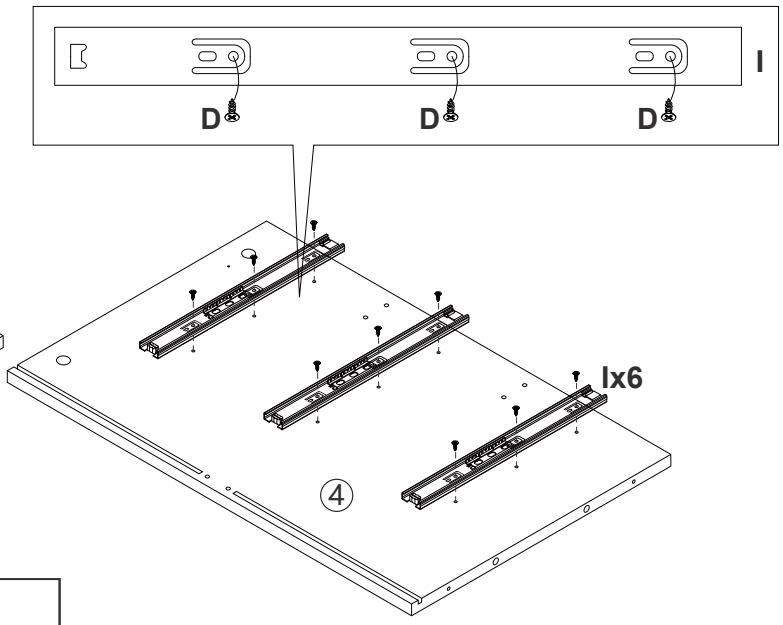

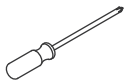	D x 18	I x 6

Step 2:

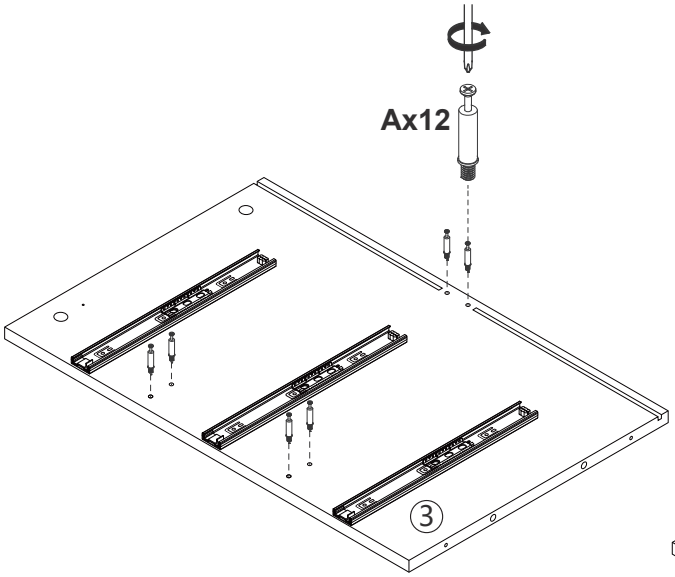

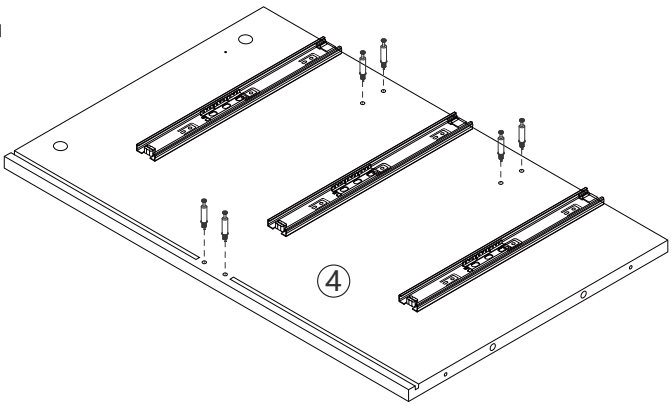

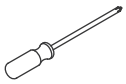	A x 12

Step 3:

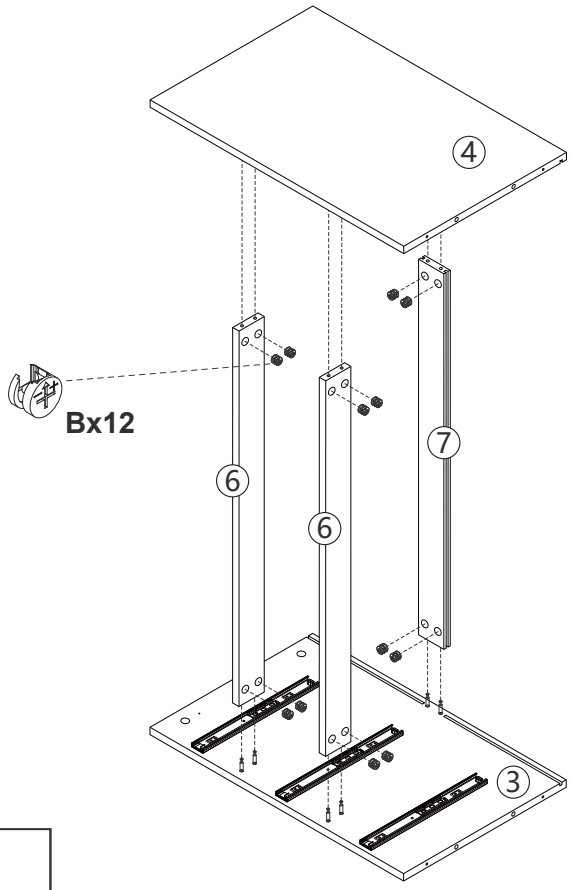

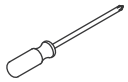	B x 12

Step 4:

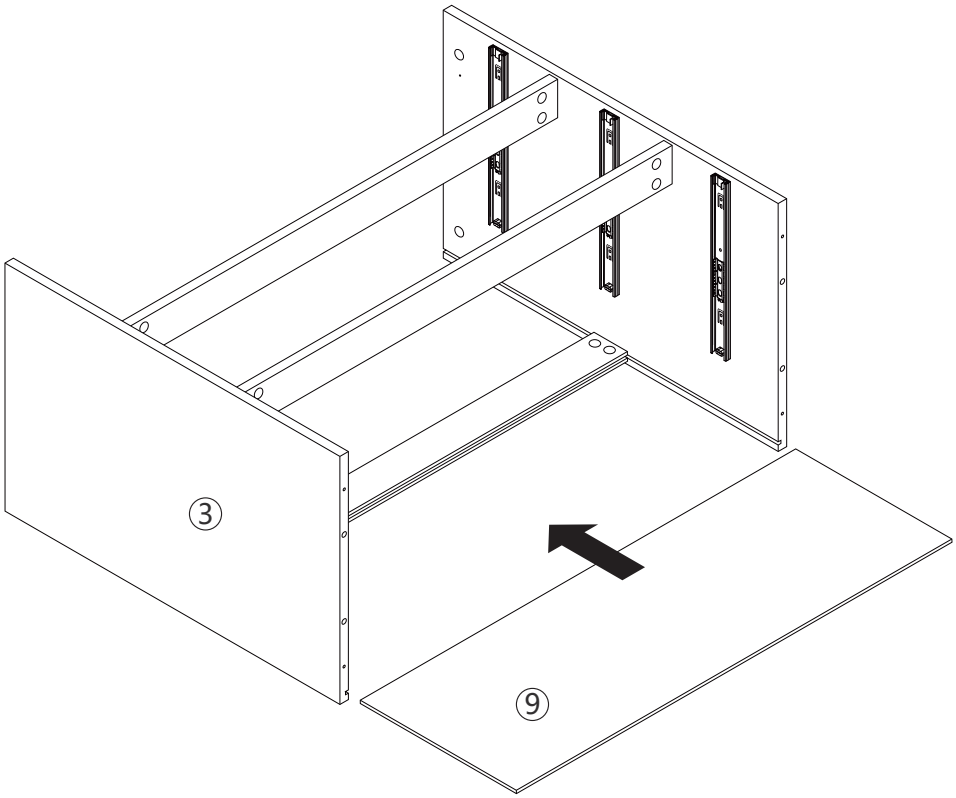

Step 5:

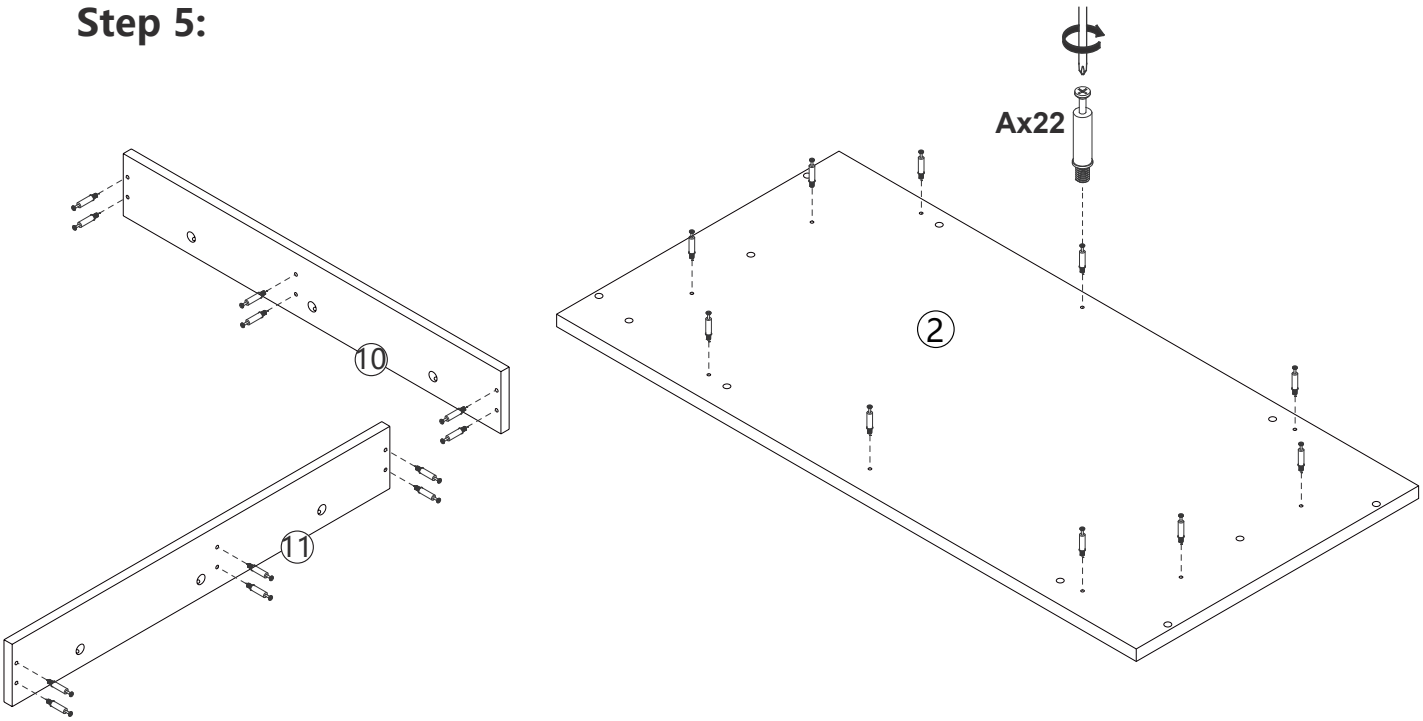

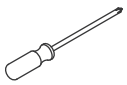	A x 22

Step 6:

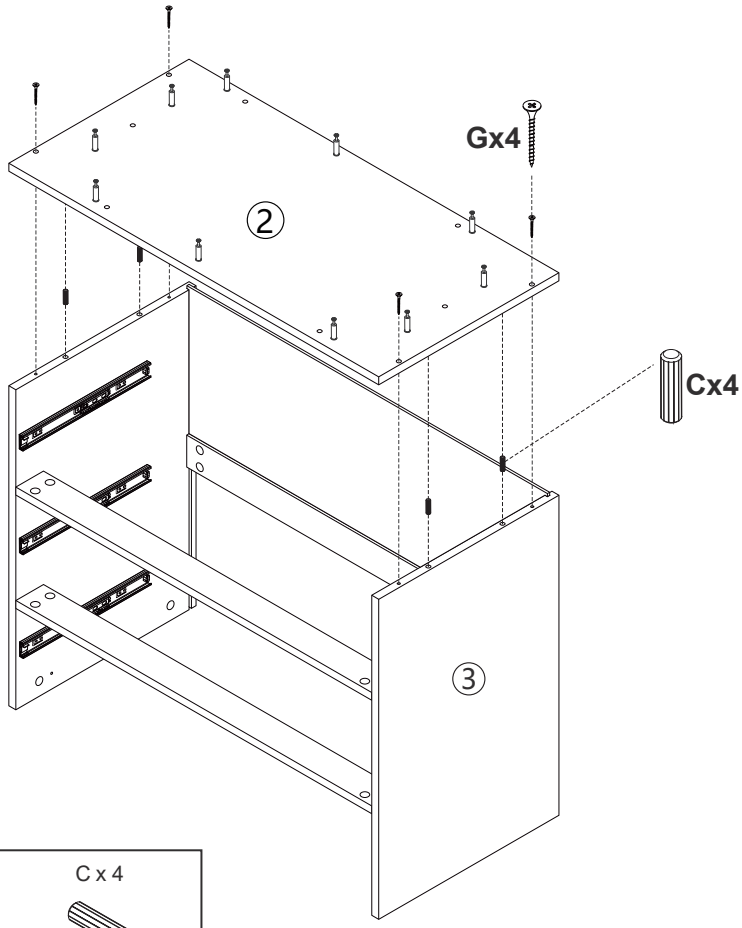

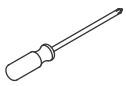	G x 4	C x 4

Step 7:

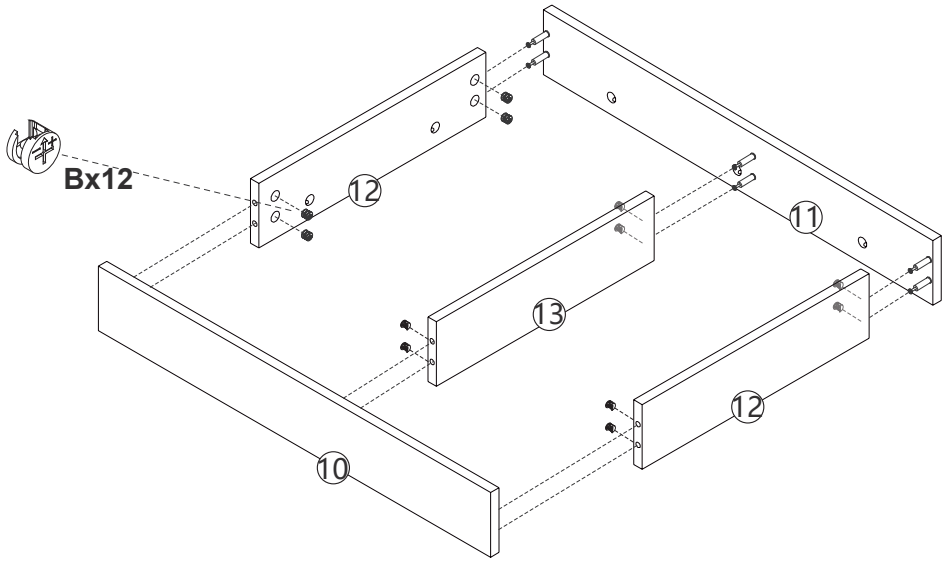

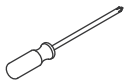	B x 12

Step 8:

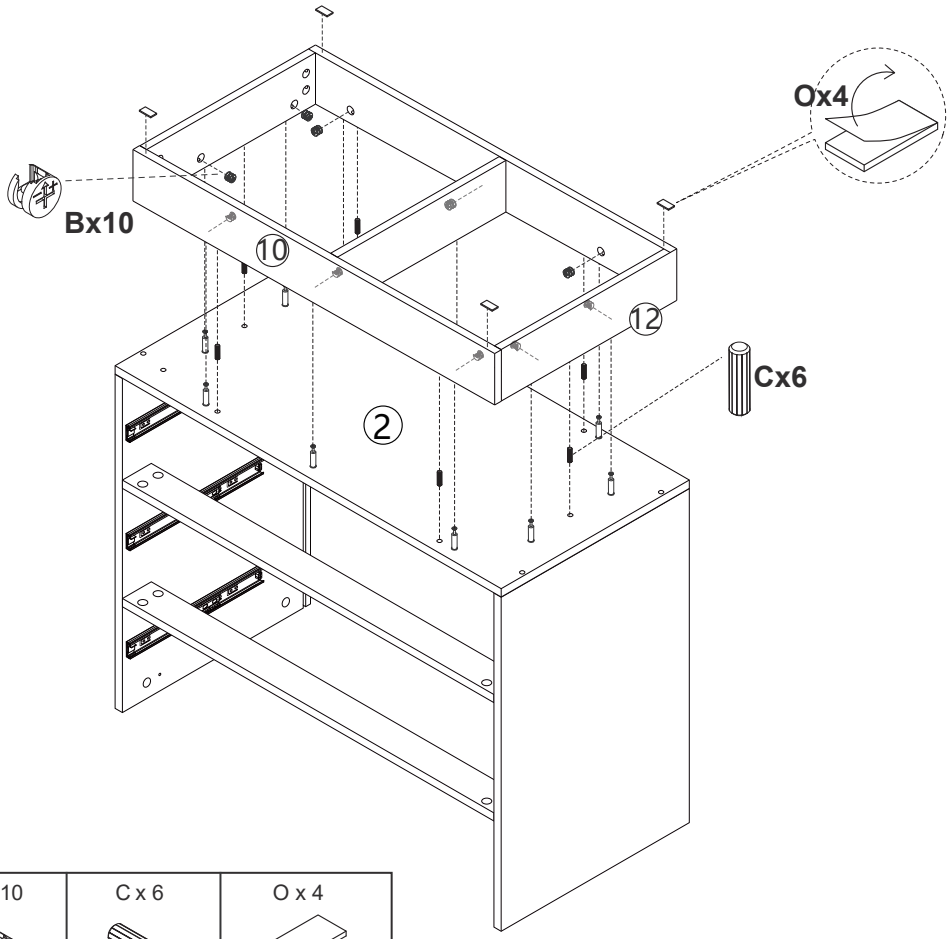

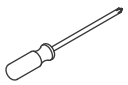	B x 10	C x 6	O x 4

Step 9:

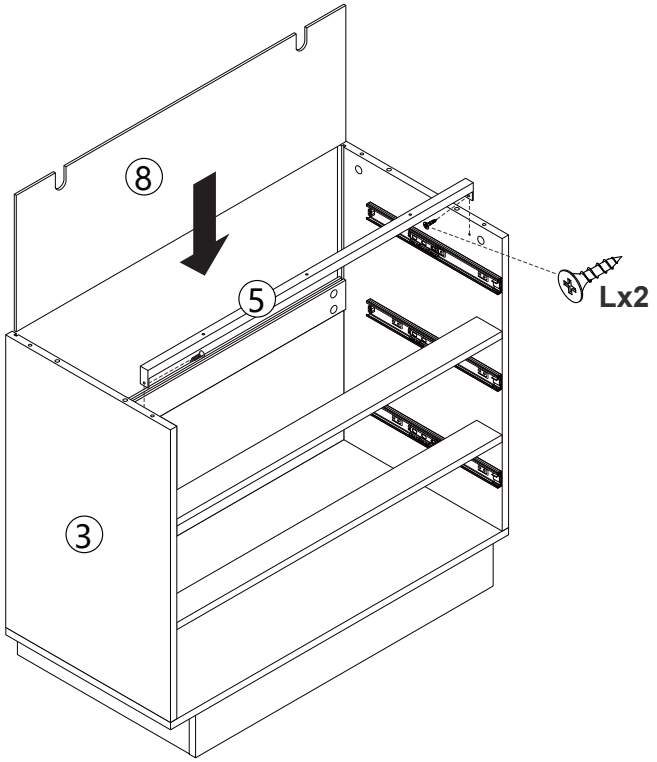

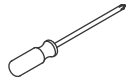	L x 2

Step 10:

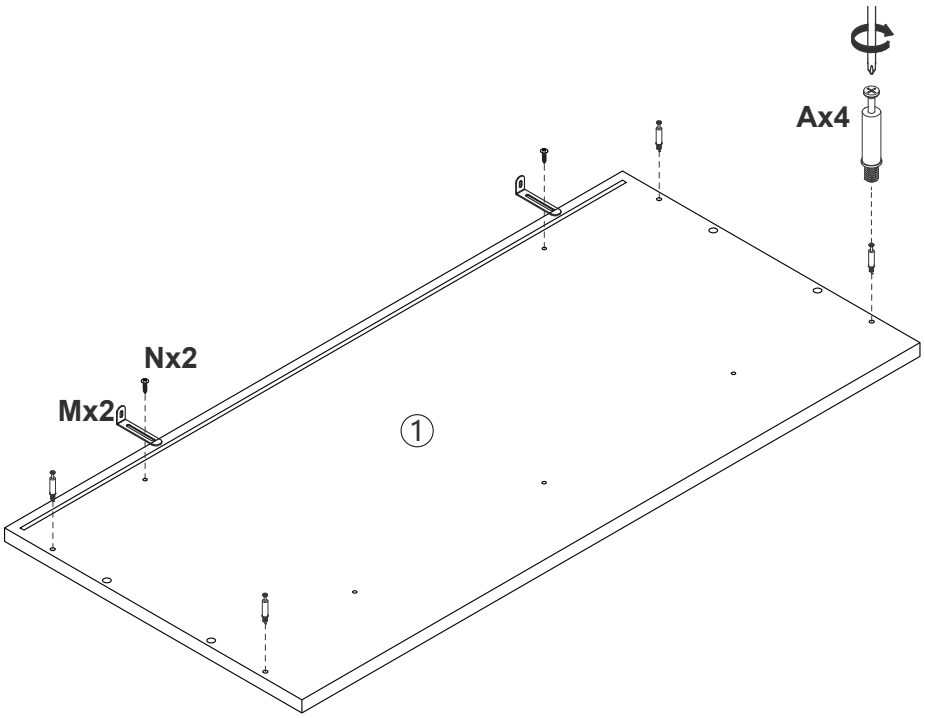

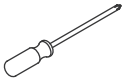	A x 4	M x 2	N x 2

Step 11:

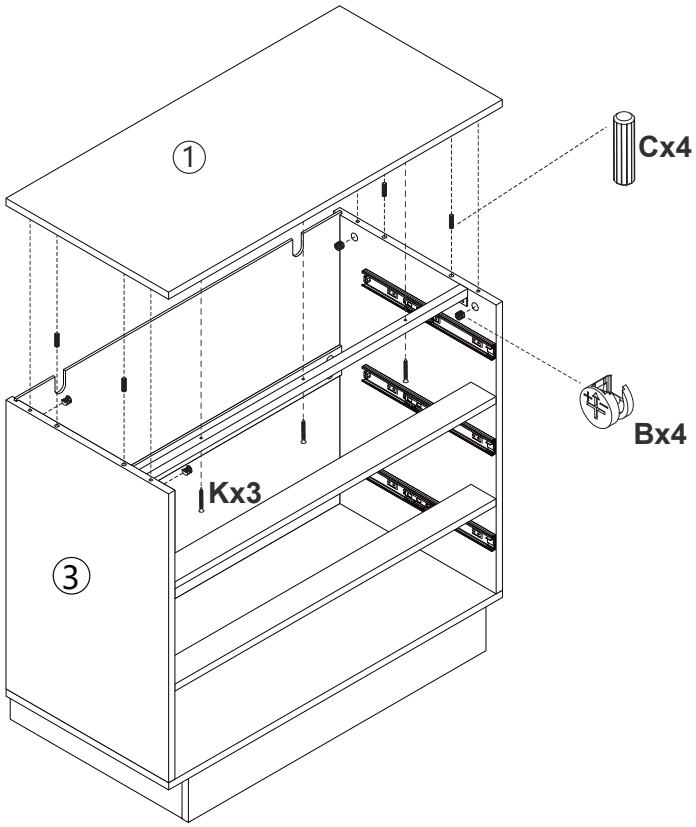

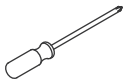	B x 4	C x 4	K x 3 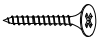

Step 12:

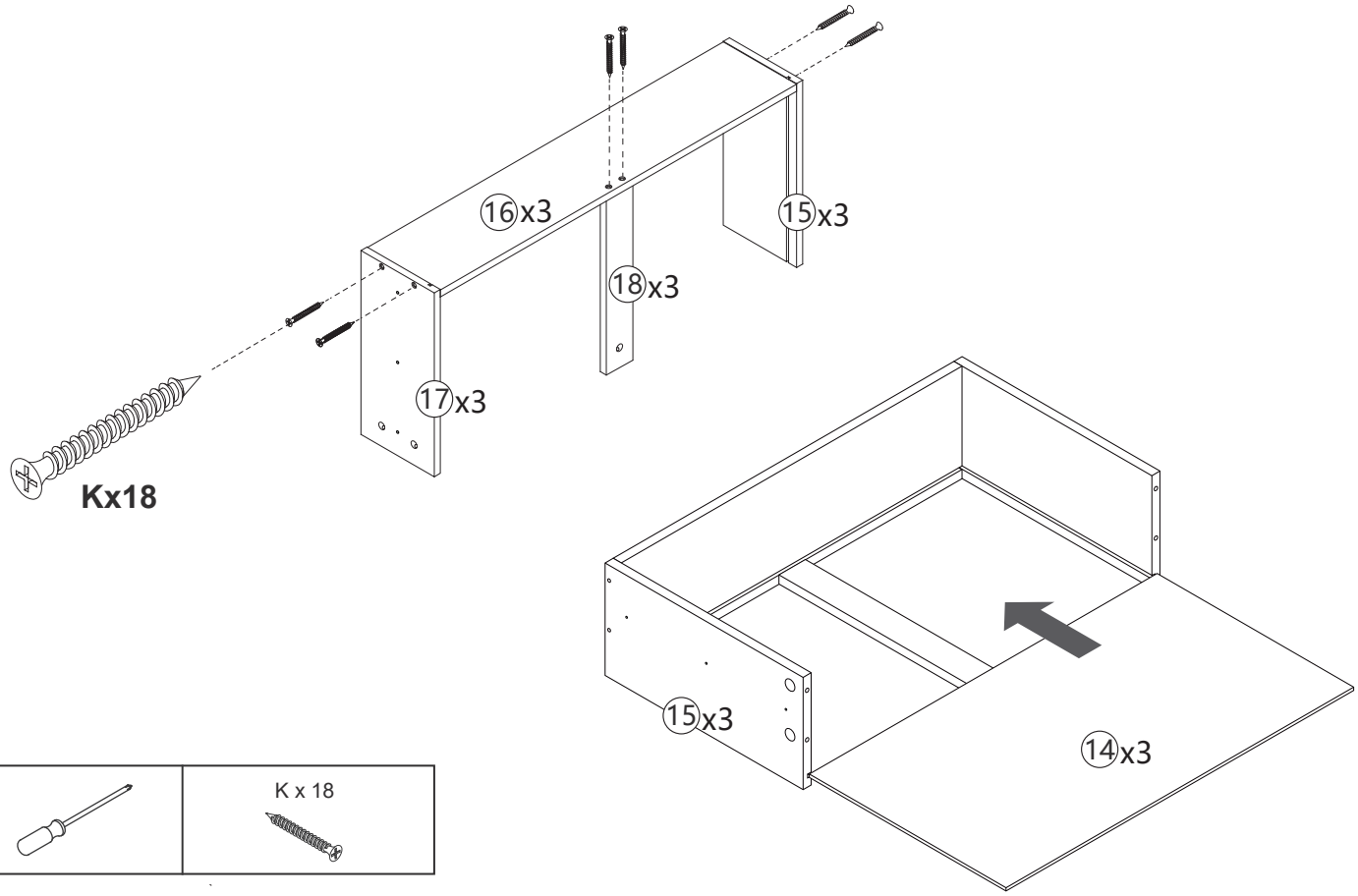

	K x 18

Step 13:

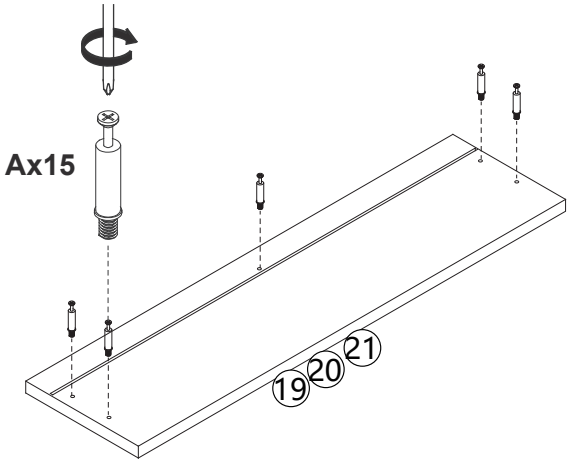

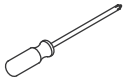	A x 15

Step 14:

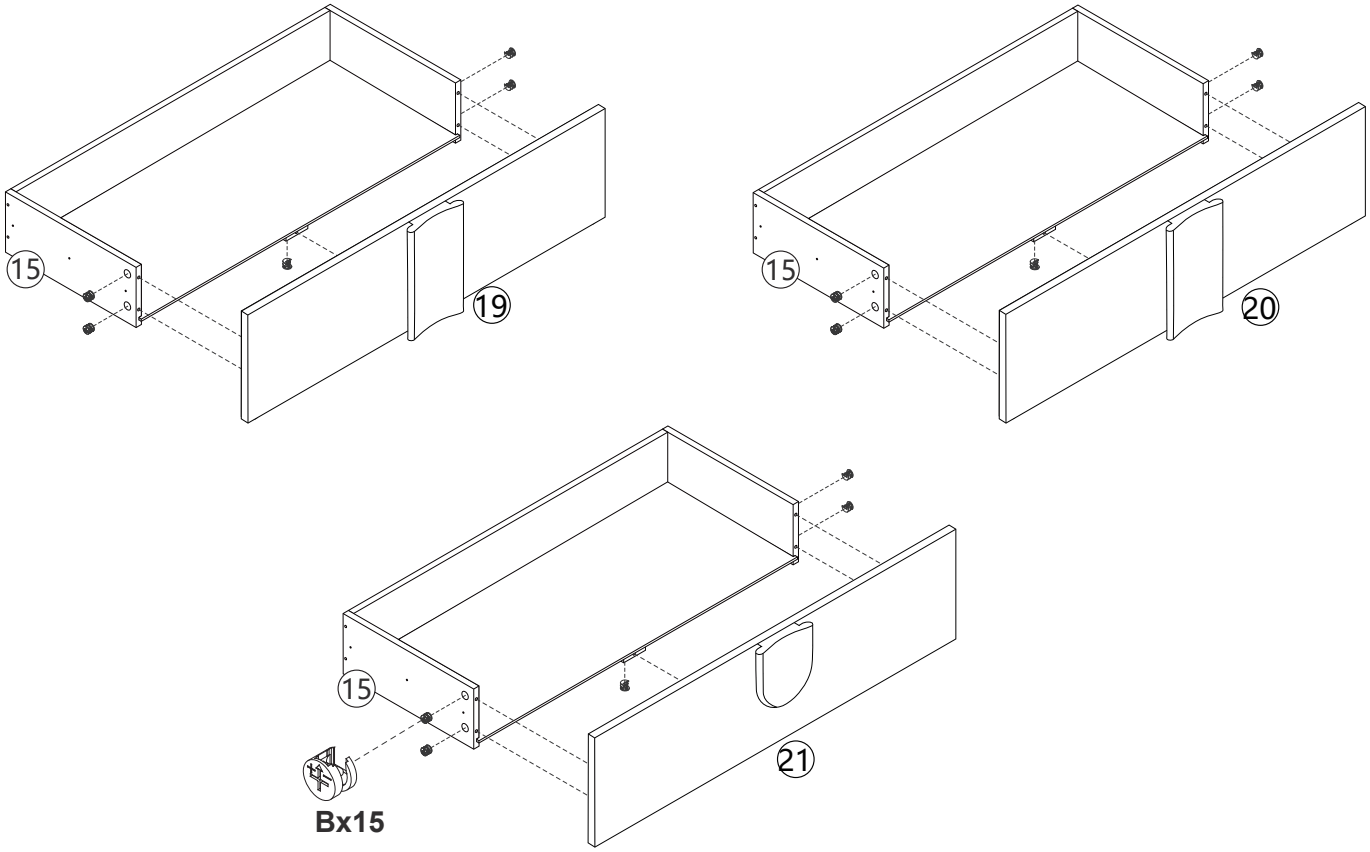

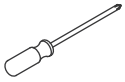	B x 15

Step 15:

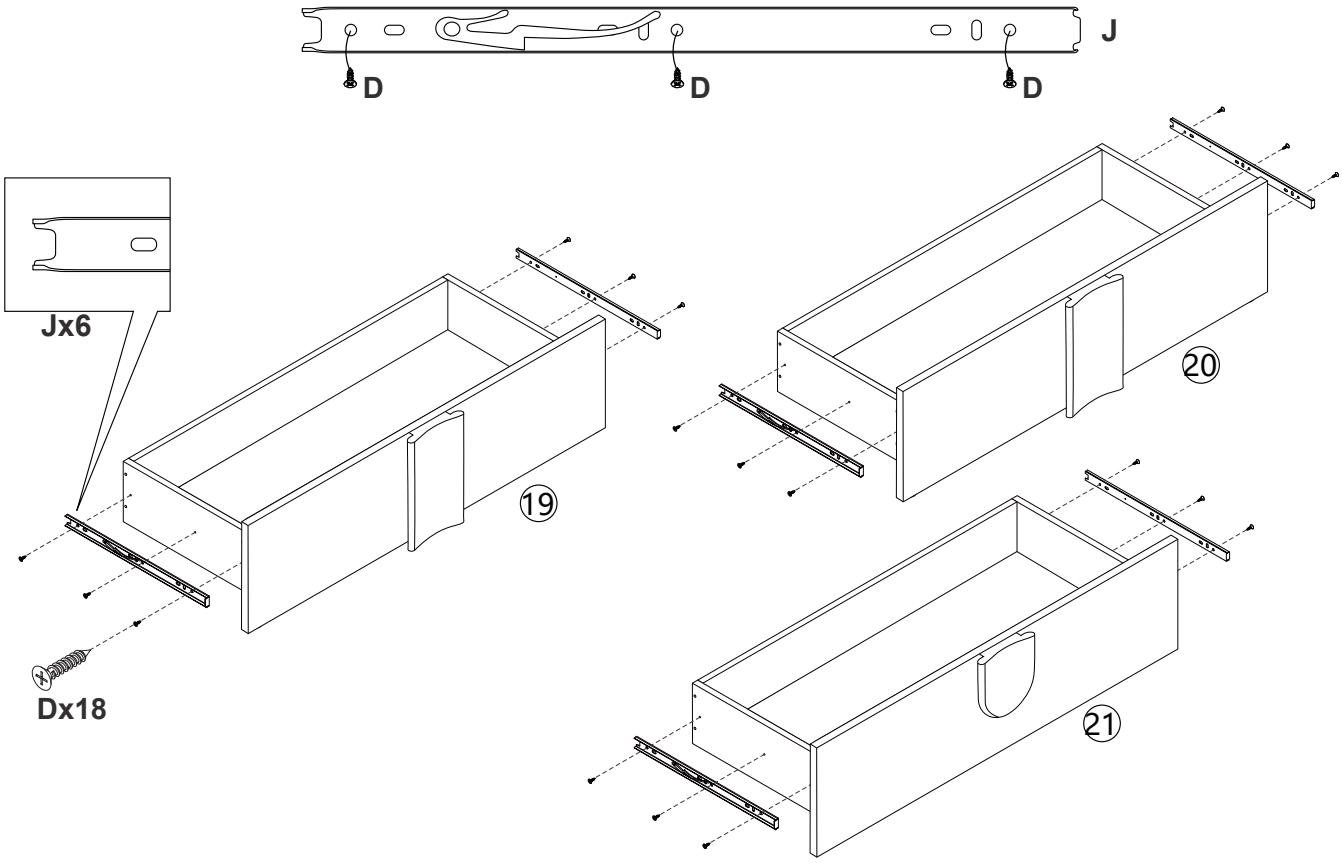

	D x 18	J x 6

Step 16:

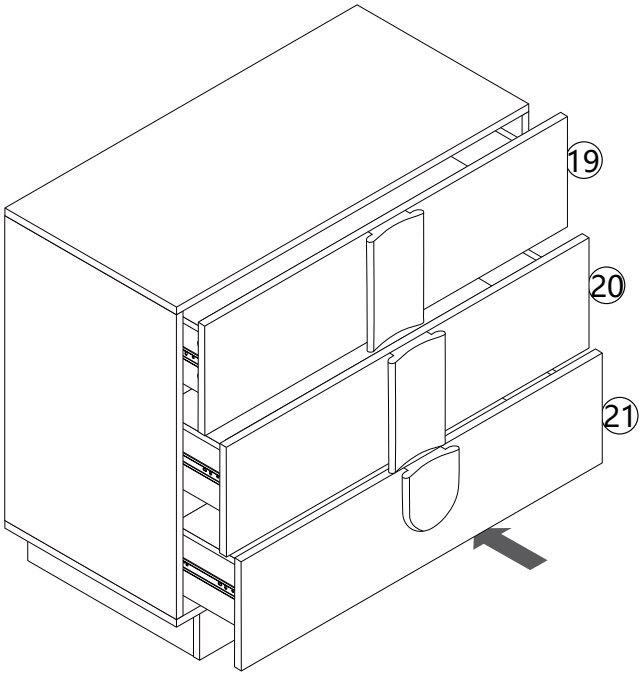

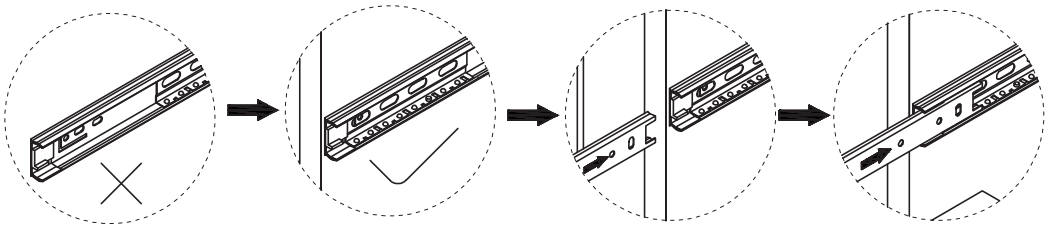

Step 17:

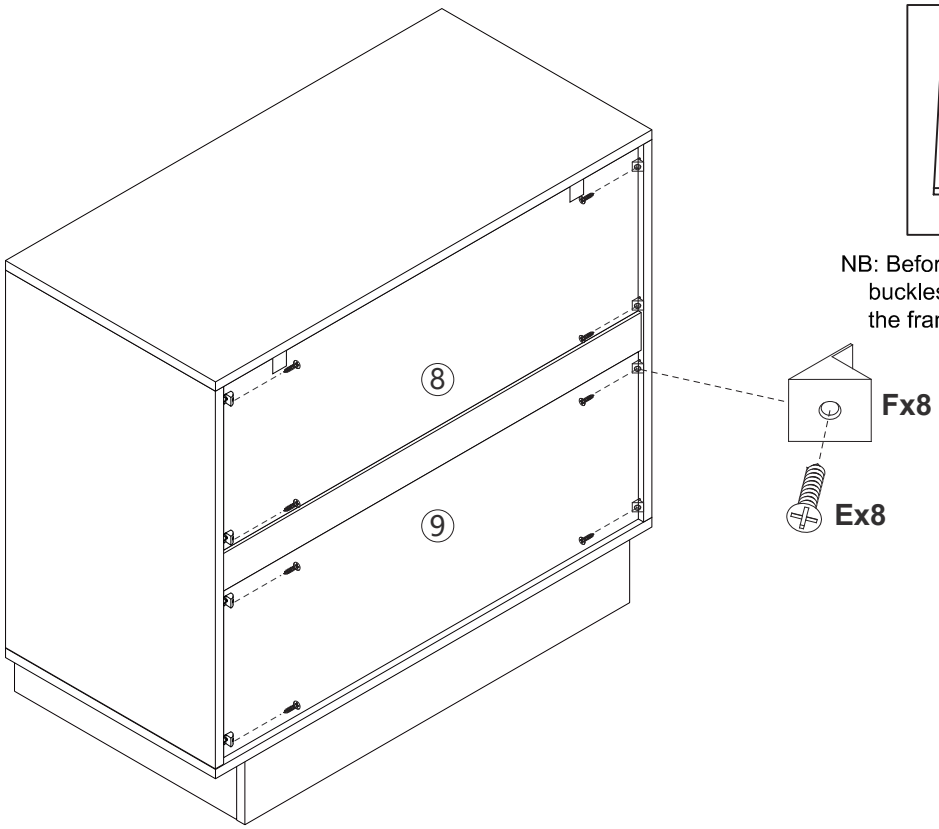

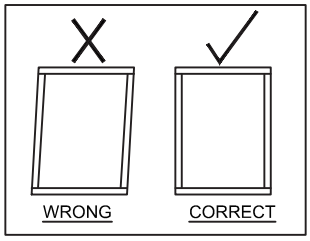

NB: Before tightening the plastic buckles and screws, please ensure the frame is square

	E x 8	F x 8

Step 18:

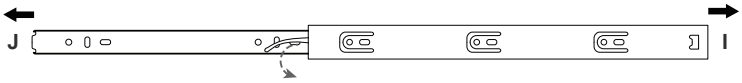

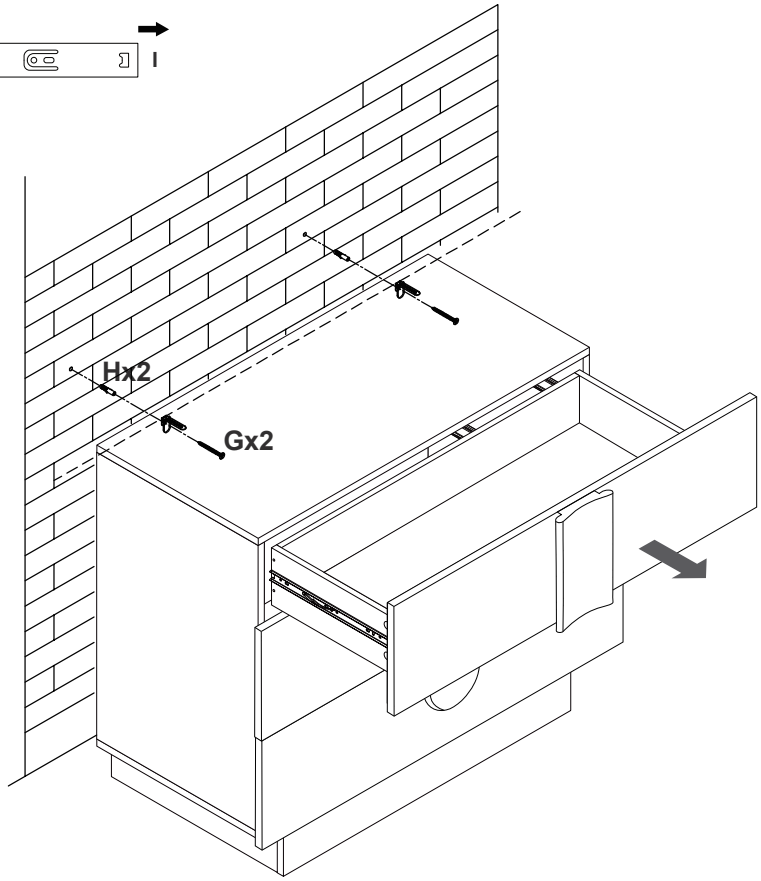

	G x 2	H x 2

Tip kit instructions

Your item of furniture has been provided with a wall attachment for your safety. It is highly recommended that this is used to prevent furniture over tipping which can cause serious or fatal crushing injuries.

- Never allow children to climb or hang on the drawers, doors or shelves.
- Place the heaviest items in the lower drawers or shelves.
- Never open more than one drawer at a time.
- A suitable attachment device is provided with your product; however you will need to source suitable fixings for your wall.
- If in doubt, please consult a qualified tradesperson.
- Two different wall fixings types could be provided with our furniture, the correct type is in this bag to suit your furniture. Further information below.

Plastic cable tie image

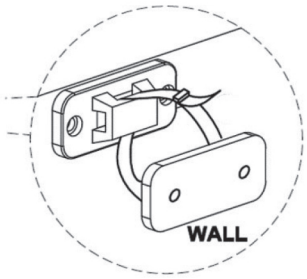

- Please ensure that the plastic bracket is screwed into the wall as the image shows.
- Wall screws and plugs are not provided however please use our guide to help you choose the correct screw / plug type for your wall.
- When drilling the walls, always ensure there are no hidden wires or pipes.

Metal L bracket image

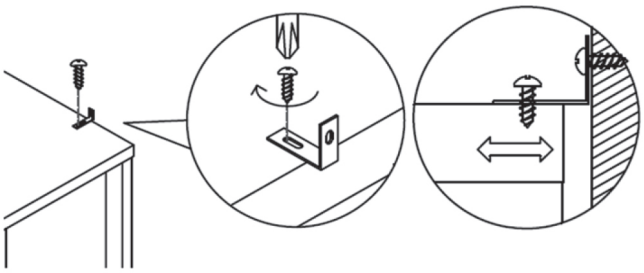

- Please ensure that the Metal L bracket is screwed into the wall at the image shows, the bracket location may vary on unit location and personal preference.
- Wall screws and plugs are not provided however please use our guide to help you choose the correct screw / plug type for your wall.
- When drilling the walls, always ensure there are no hidden wires or pipes.

Wall fixings

Step by step

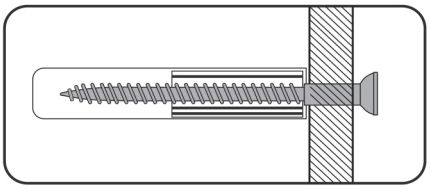

Important

When drilling into walls always check there are no hidden wires or pipes etc. Make sure that the screws and wall plugs being used are suitable for supporting your unit. Consult a qualified tradesperson if you are unsure.

Hints

1. General Rule; Always use a larger screw and wall plug if you are not sure.

2. Ensure you use the recommended drill bit to match the wall plug and hole size.

3. Ensure you drill the hole horizontally, do not force the drill or enlarge the hole.

4. Take extra care when drilling high walls, ceilings and ceramic tiles. Ensure the plug is fitting below the ceramic tile to avoid splitting or cracking.

5. Ensure wall plugs are well fitted and are a tight fit in the drilled hole.

Types of Walls

You can use one of the following types of wall plug if your walls are made of brick, breeze block, concrete, stone, wood or plastic board.

1. STANDARD Wall Plug

General wall materials

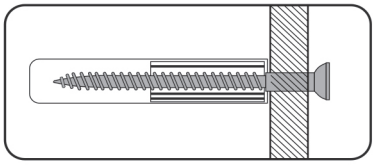

These come in various sizes and are made from plastic or sometimes wood fibre.

2. GENERAL PURPOSE Wall Plug

Aerated/Breeze block

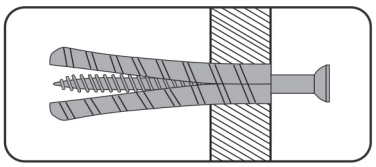

Generally aerated blocks should not be used to support heavy loads, use a specialist fitting in this case. For light loads, a General Purpose Plug can be used.

3. SHIELD ANCHOR Wall Plug

Heavy loads

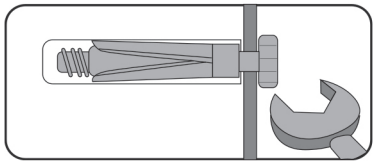

For use with heavier loads such as TV & Hi-fi Speakers and Satellite Dishes etc.

4. CAVITY FIXING Wall Plug

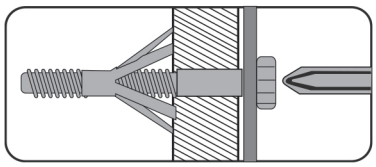

For use with plaster board partitions or hollow wooden doors.

5. CAVITY FIXING HEAVY DUTY Wall Plug

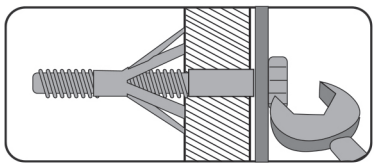

For use with plaster board partitions or hollow wooden doors.

6. HAMMER FIXING Wall Plug

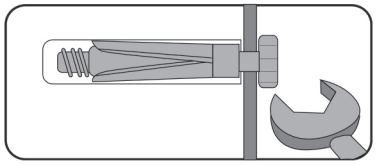

For use with walls stuck with plaster board. The hammer fixing allows it to be fixed to the wall rather than the plaster board. Always check the fixing is secure to the retaining wall.

Care and Maintenance

⚠ **Safety**

Always check the fitting and location to ensure your safety in and around the home.

⚠ **Fitting**

From time to time check the fitting to ensure the wall plugs or screws do not become loose.

Wall fixings

- This wall fixing is provided for your safety and we recommend that once in position the unit is secured to the wall for extra stability.
- Wall fixings may vary depending on item of furniture purchased.
- Wall fittings are not provided as different wall types require different raw plugs and screws.
- Please ensure that you use fittings that are suitable for your wall type (see next page for a general guide).
- Please ensure that the head of the screws used has a diameter greater than the diameter of the hole on the wall fixing and that the fixing is safe and secure before using.
- When drilling into the walls, always ensure there are no hidden wires or pipes.
- If you are unsure, we recommend you consult a qualified tradesperson.

Wood care advice

Wood care advice

Wood is a natural product and each piece is individual.

As a natural product, wood is affected by temperature and humidity. We recommend that you avoid placing the furniture directly in front of heat sources such as radiators or fires as this can cause cracking or warping over time.

The colour will mellow over time and new items can vary in shade from items that you have already purchased.

Strong direct sunlight can affect the colour dramatically, so try to avoid this as much as possible, we also recommend that any ornaments, coasters and items placed on the product are periodically moved around to allow the colour to mellow evenly.

Always use matts and coasters to protect the surface when placing items on the furniture. This will help to protect the finish from heat, liquids or items that might scratch your furniture.

If items are to be placed on the surface of your furniture and have rubber feet, it is advisable to use mats to prevent marking.

Always lift your furniture into place, avoid dragging it across the floor as this can cause damage to joints.

When placing furniture on a wooden or laminate floor, please ensure that the plastic or felt protectors are securely fitted and in place.

Only clean using a damp cloth and mild detergent, do not use bleach or abrasive cleaners.

From time to time check that there are no loose screws on this unit.

Remove any spills immediately to avoid staining.

Dust regularly with a soft lint free cloth or duster.

The use of abrasive polish or silicon based polishes is not advised as these can affect the polished finish and joints over time.

Uneven floors could give the impression that doors of wall units and wardrobes are out of alignment. Be aware of this and compensate if necessary by adjusting the hinges or packing a corner to level the item. Please refer to the instructions, included with your furniture, and adjust accordingly.

If your furniture becomes stained, scratched, chipped or suffers other damage, we recommend professional help is sought to restore it. Please contact our customer services line for recommended agents.

Always follow fitting instructions carefully and retain them for future use.