Thank You For Shopping

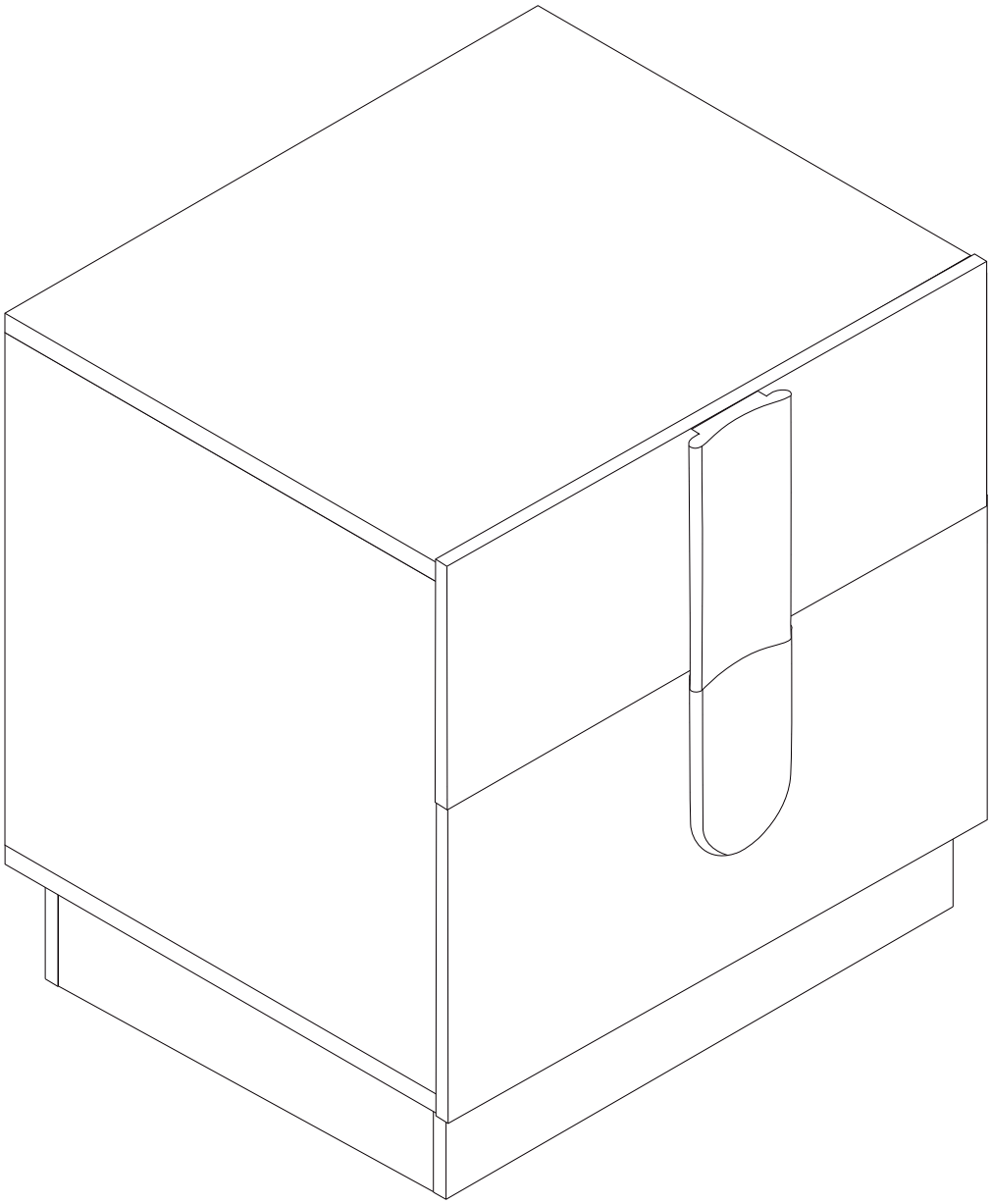

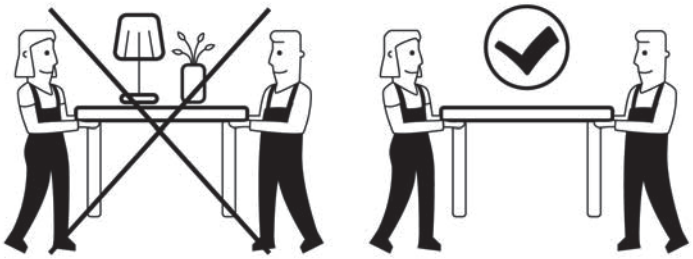

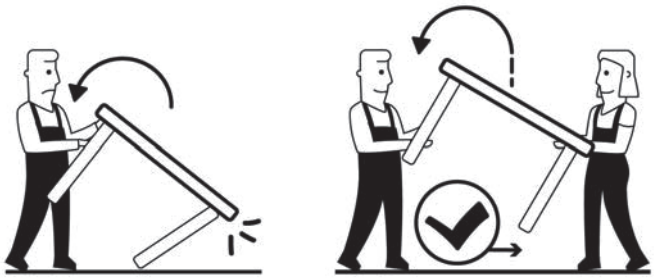

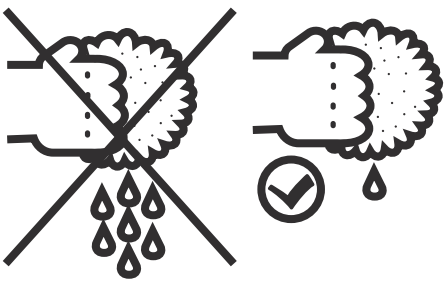

Component parts supplied

Ref	Dimensions	Visual	Qty
1	23.6x14.2in	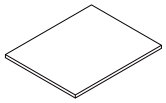	1
2	23.6x14.2in	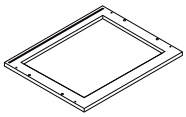	1
3	18.9x14.2in	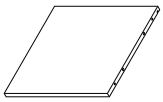	1
4	18.9x14.2in	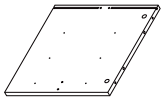	1
5	22.4x2.4in	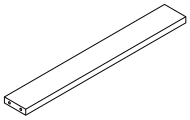	1
6	22.4x2.4in	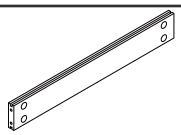	1
7	22.7x8.6in	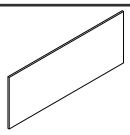	2
8	21.2x3.1in	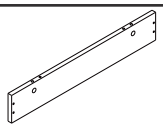	2
9	12.2x3.1in	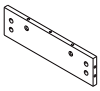	2
10	11.8x5.8in	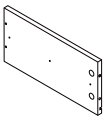	1
11	20.7x5.8in	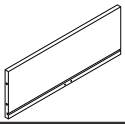	1
12	11.8x5.8in	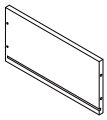	1

Ref	Dimensions	Visual	Qty
13	20.9x11.6in	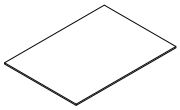	2
14	23.6x7.9in	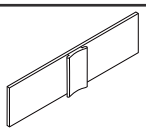	1
15	11.8x7.9in	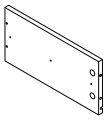	1
16	20.7x7.9in	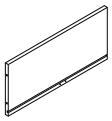	1
17	11.8x7.9in	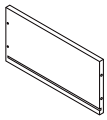	1
18	23.6x12in	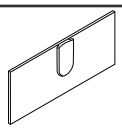	1
19	11.3x2.3in	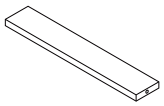	2

Parts and fittings

Fittings

Please check you have all the fittings listed below with your product.

A	B	C	D	E	F
M5*35mm Cam Lock Screw	Ø15*10mm Cam Lock	Ø8*30mm Dowel	M3.5*12mm Screw	M3*12mm Screw	Plastic Buckle
38pcs+4pcs extra	38pcs+4pcs extra	14pcs+1pc extra	24pcs+2pcs extra	8pcs	8pcs

G	H	I	J	K
M4*40mm Screw	M4*30mm Screw	Slide	Slide	Mat
4pcs	12pcs+1pc extra	4pcs	4pcs	4pcs

CAM-LOCK

Tighten until shoulder is flush with panel. Do not overtighten or undertighten(see example below)

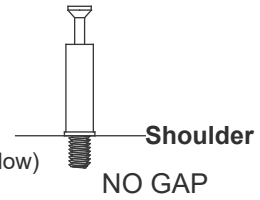

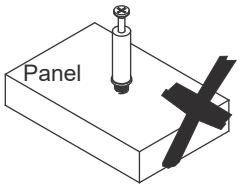

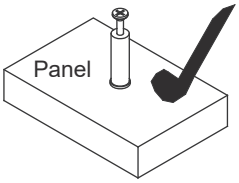

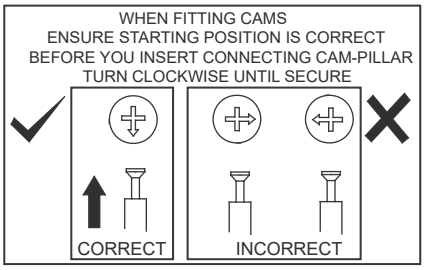

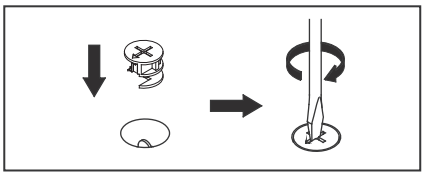

Exploded view

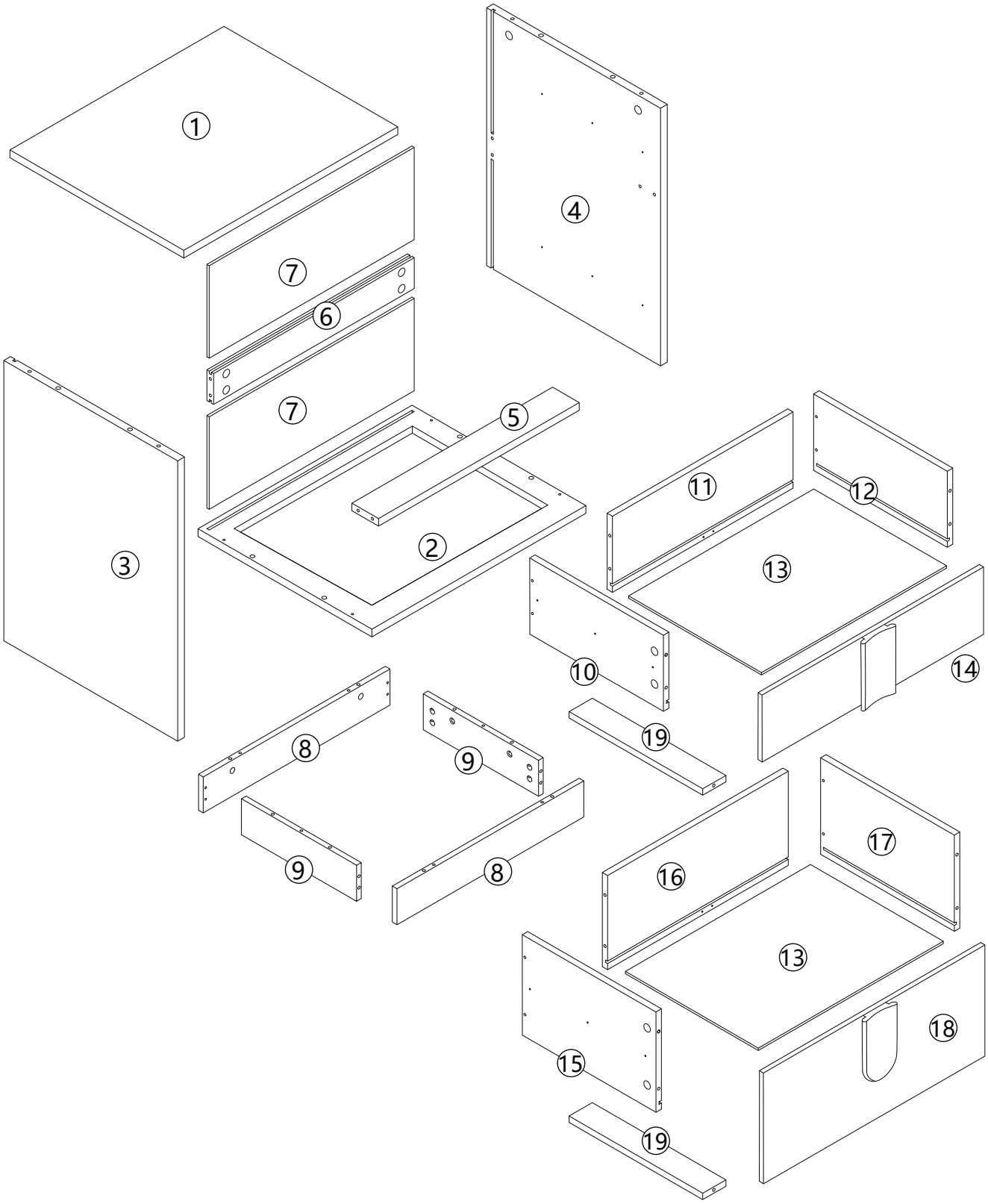

Step 1:

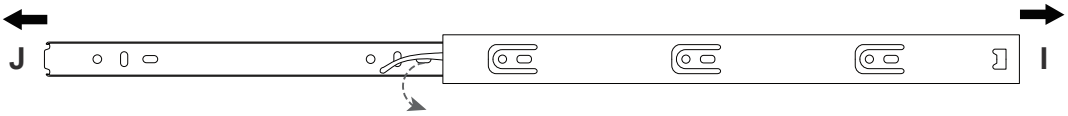

Note: to separate Part J from Part I press the black clip and slide Part J out.

Need to assemble drawer runner in the correct pilot hole as the diagram indicates.

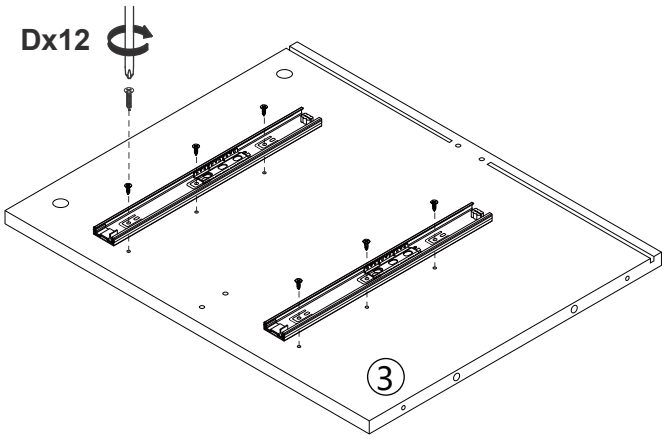

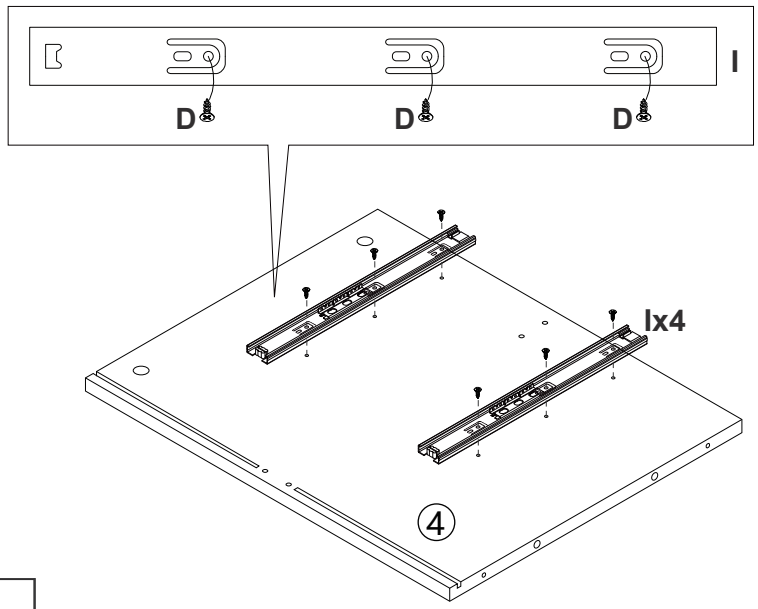

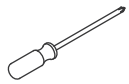	D x 12	I x 4

Step 2:

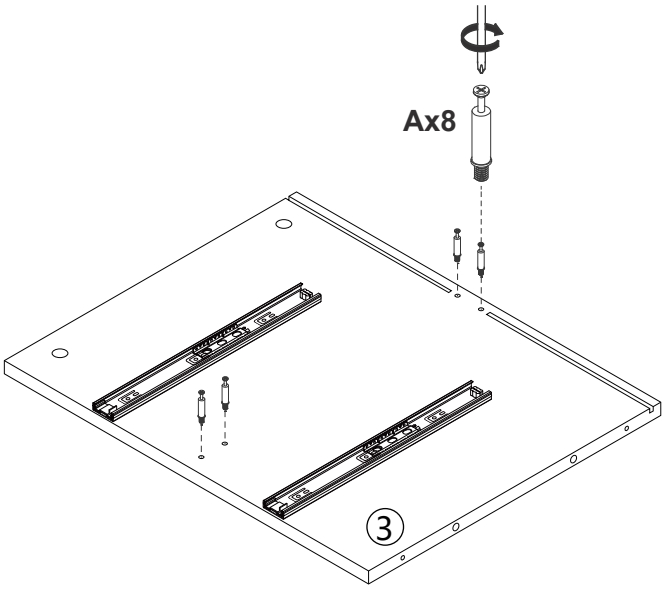

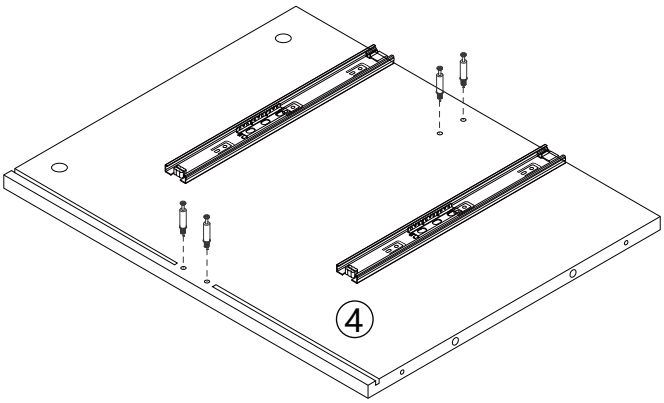

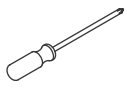	A x 8

Step 3:

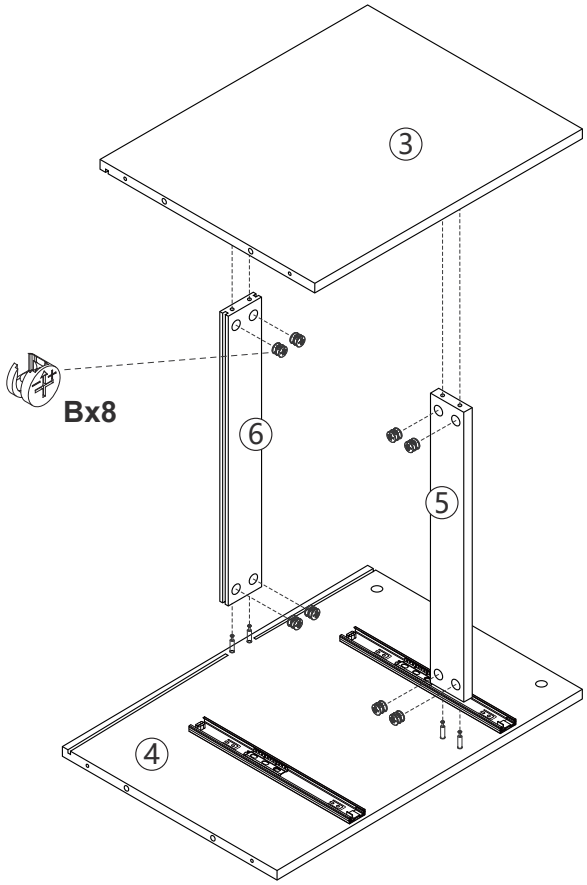

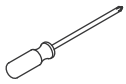	B x 8

Step 4:

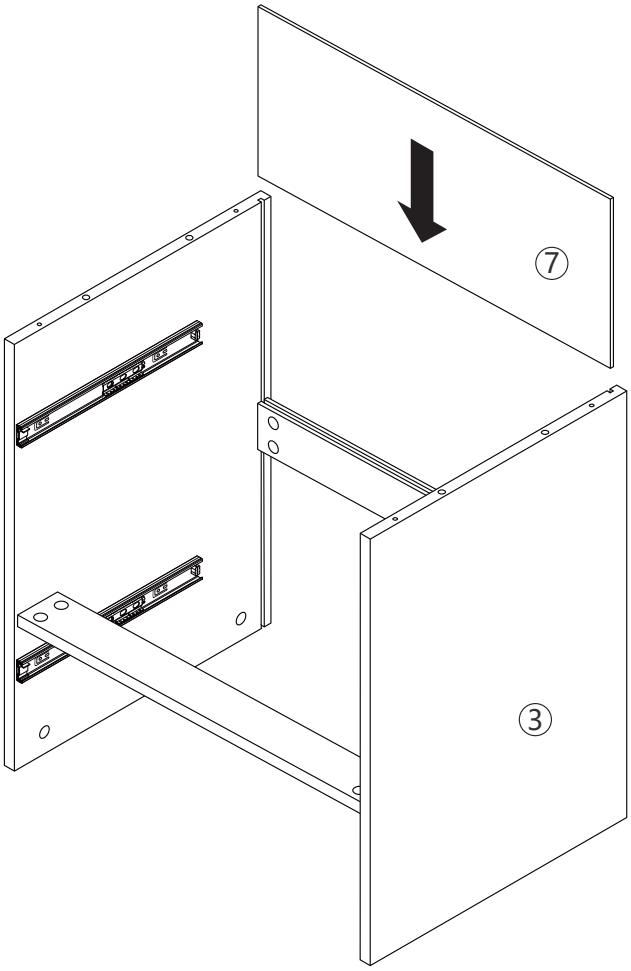

Step 5:

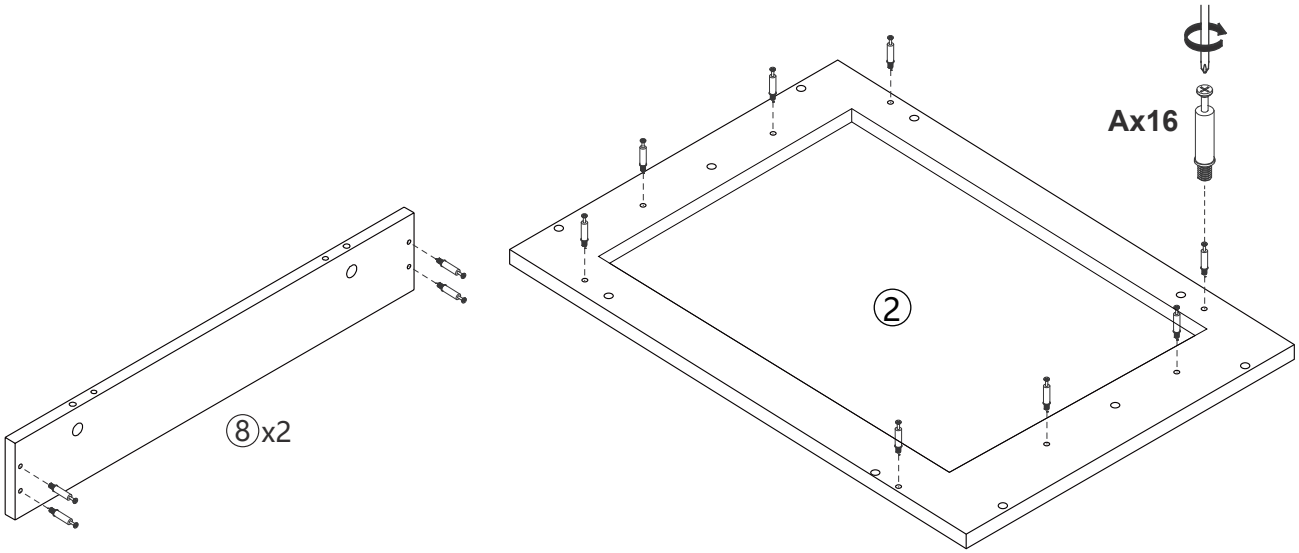

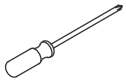	A x 16

Step 6:

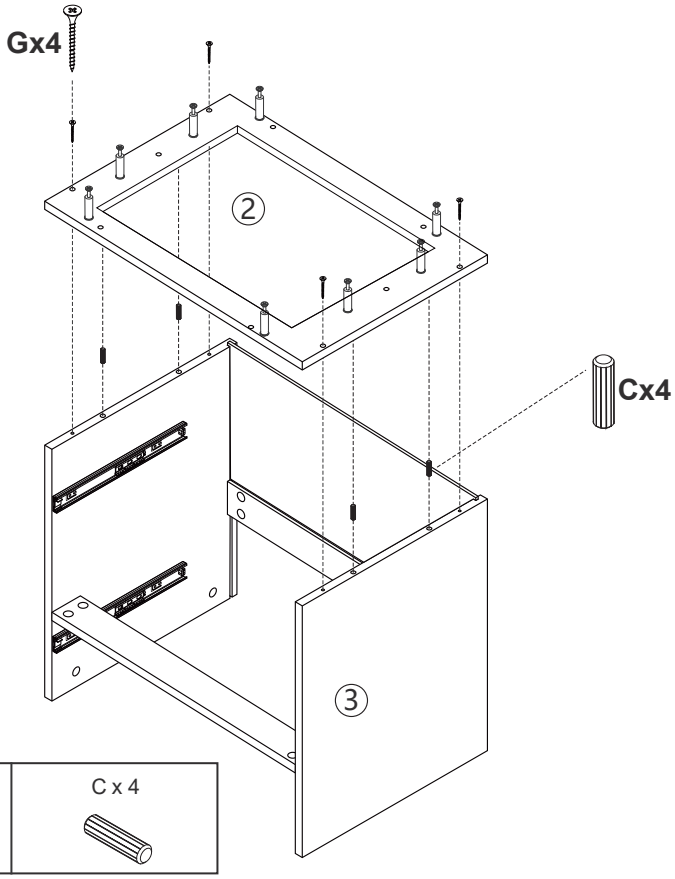

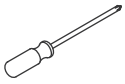	G x 4	C x 4

Step 7:

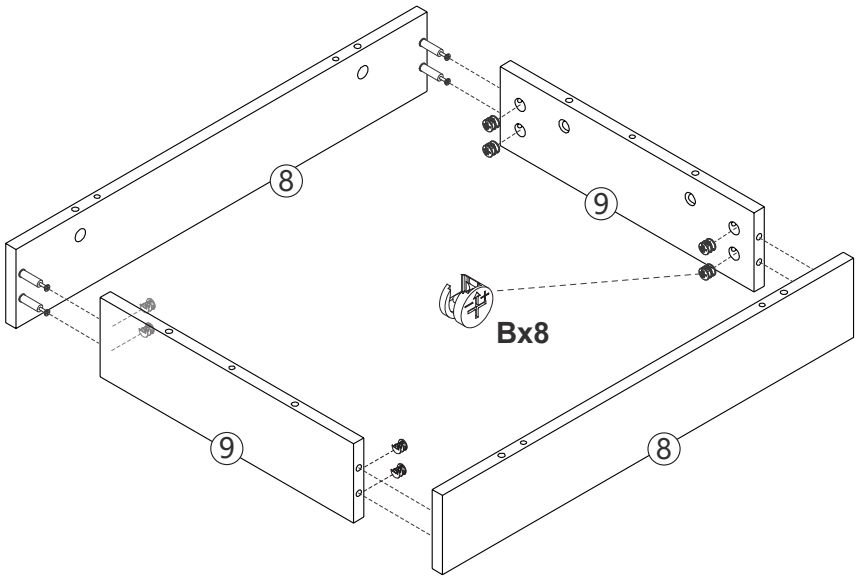

	B x 8

Step 8:

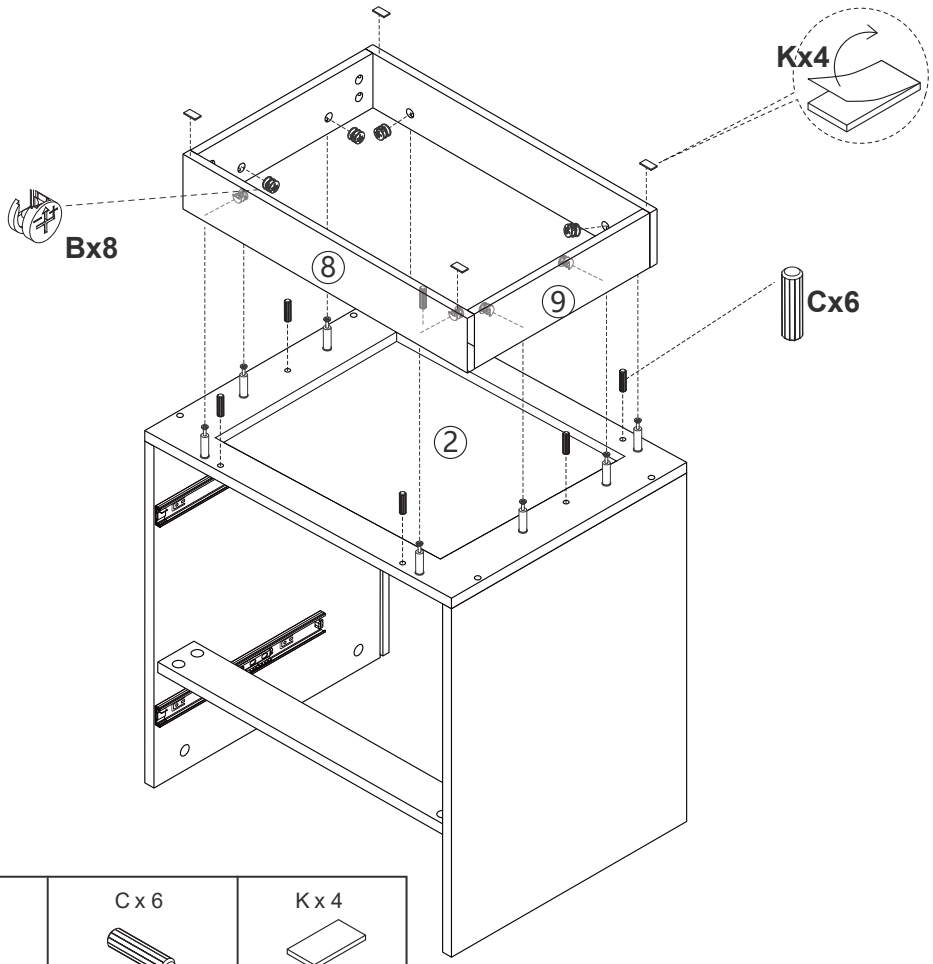

	B x 8	C x 6	K x 4

Step 9:

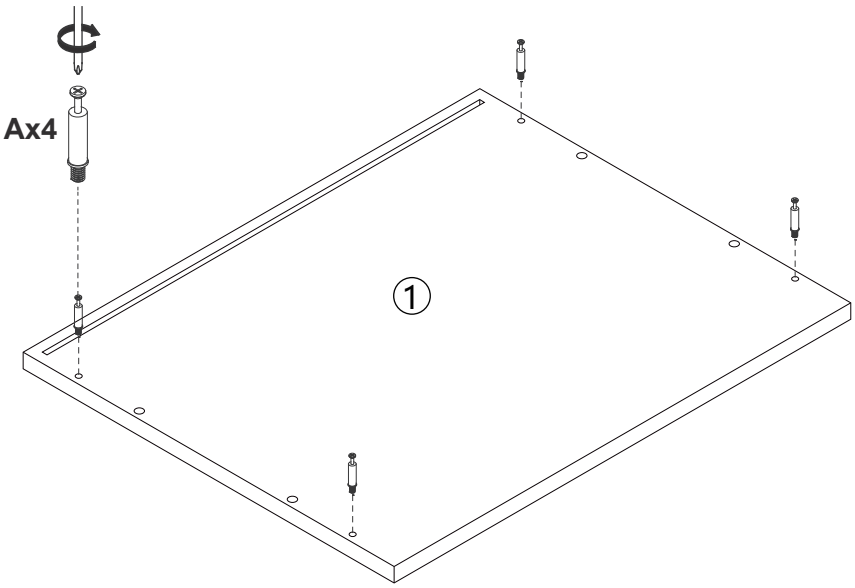

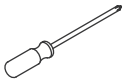	A x 4

Step 10:

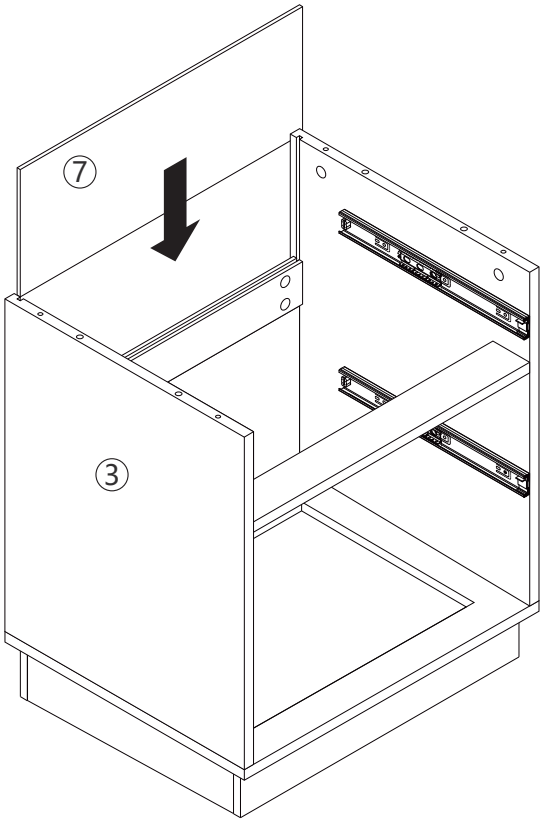

Step 11:

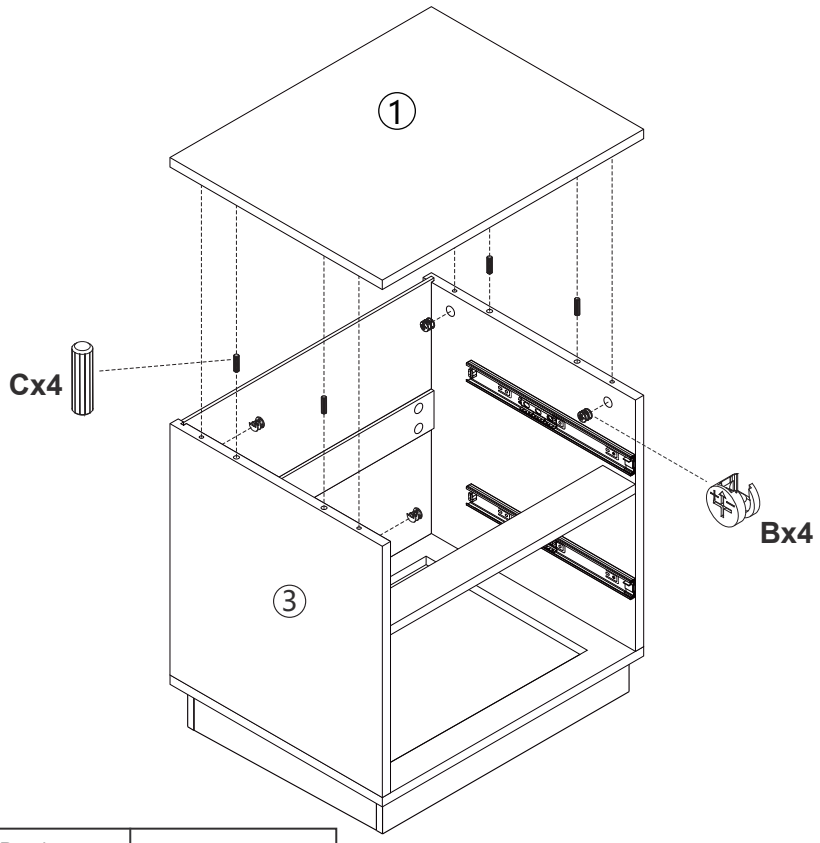

	B x 4	C x 4

Step 12:

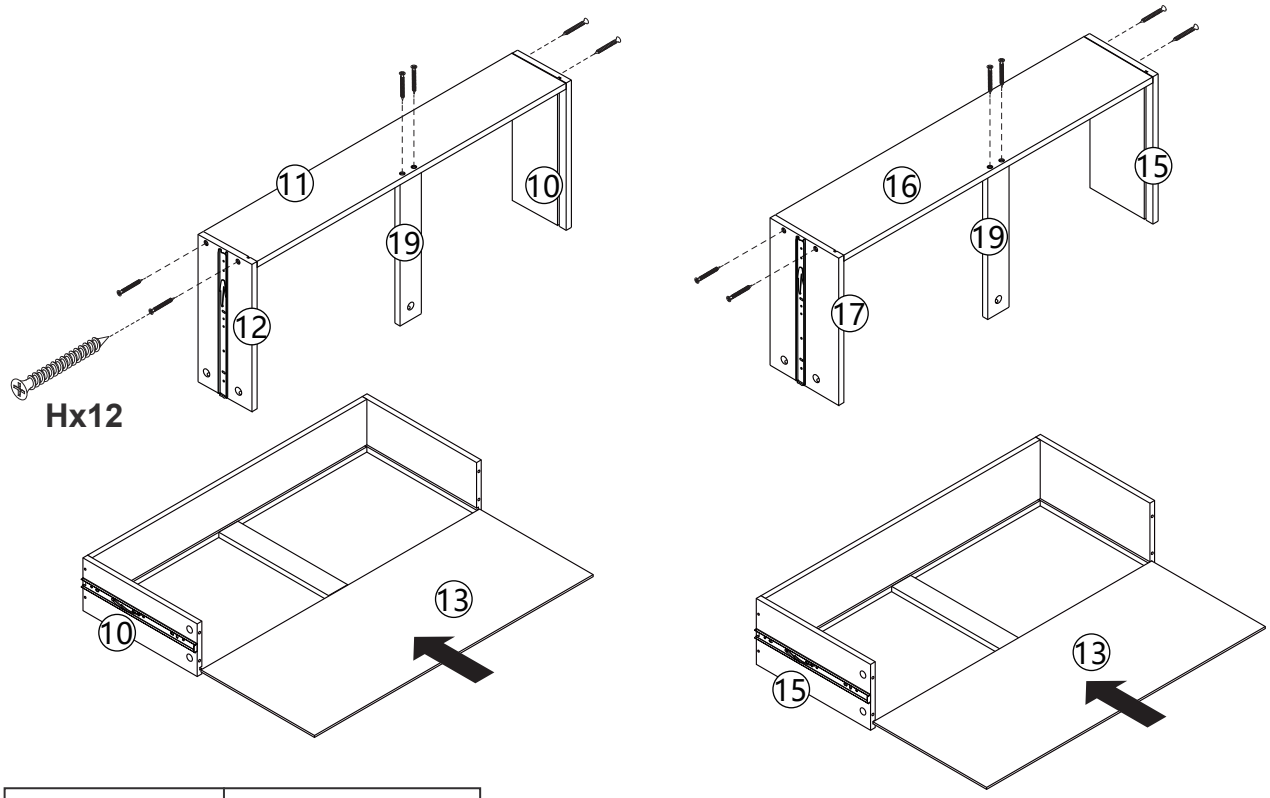

	H x 12

Step 13:

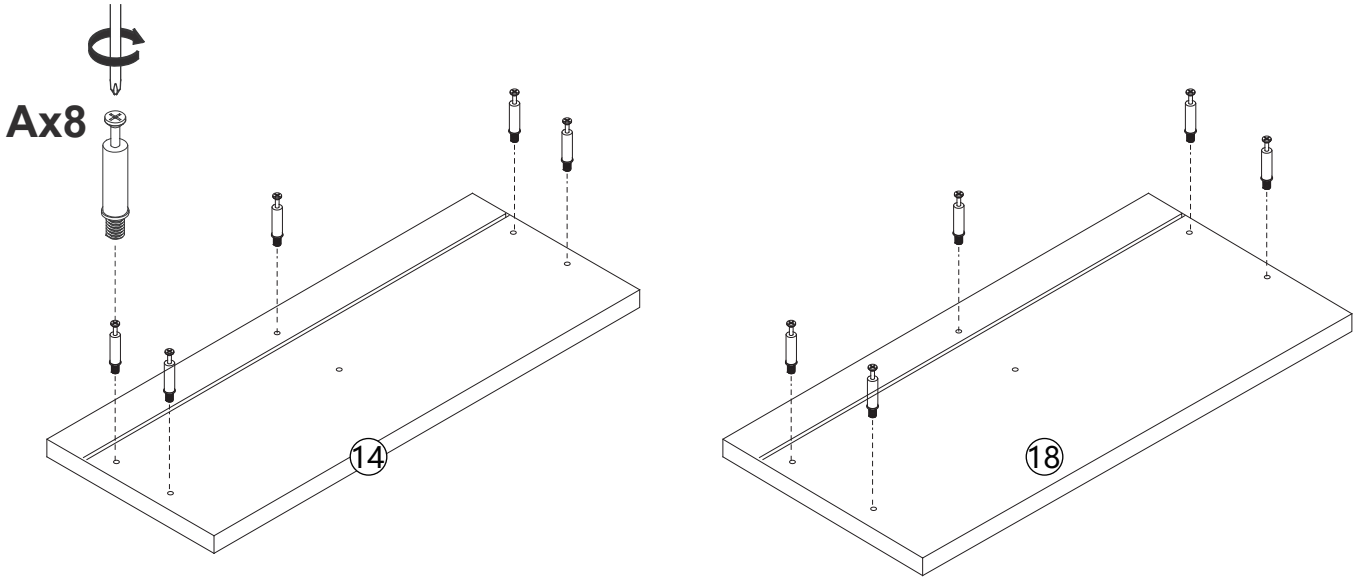

	A x 10

Step 14:

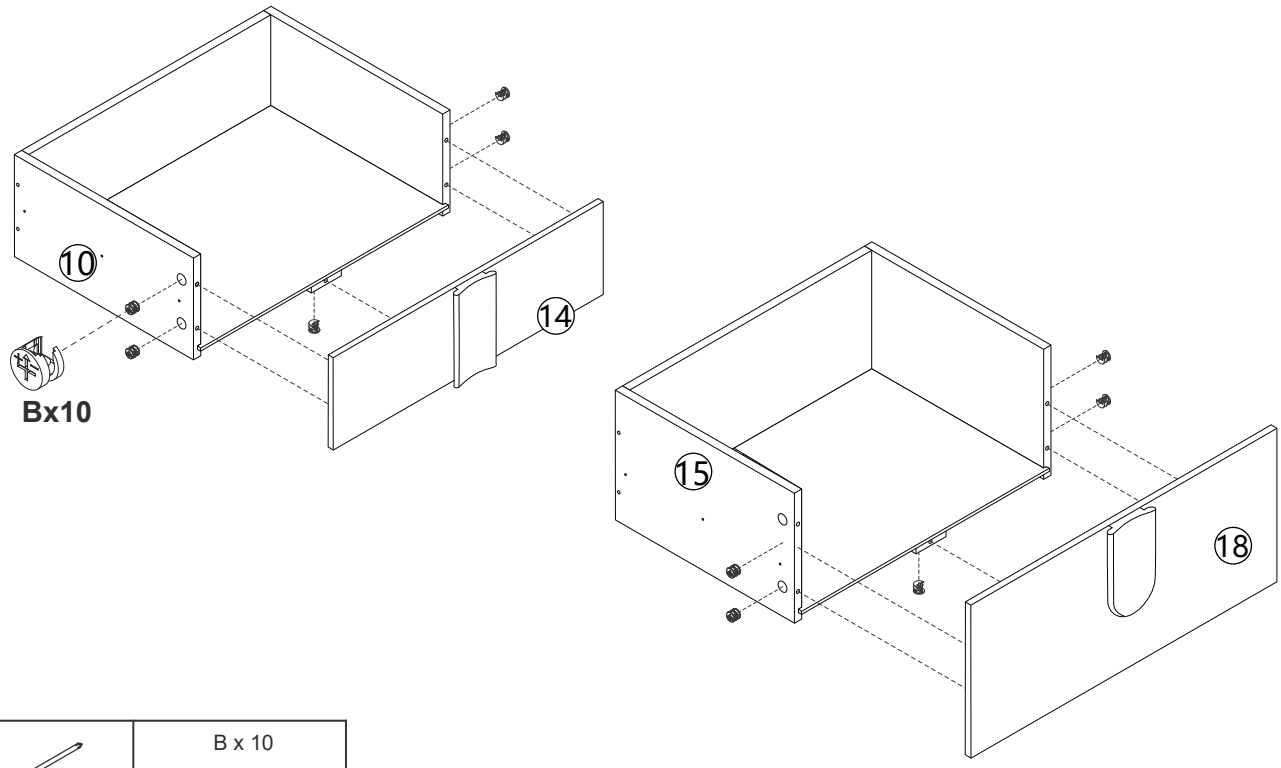

	B x 10

Step 15:

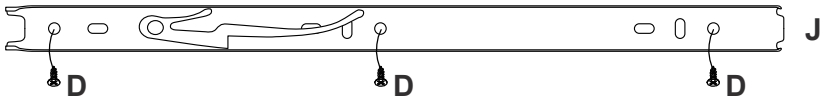

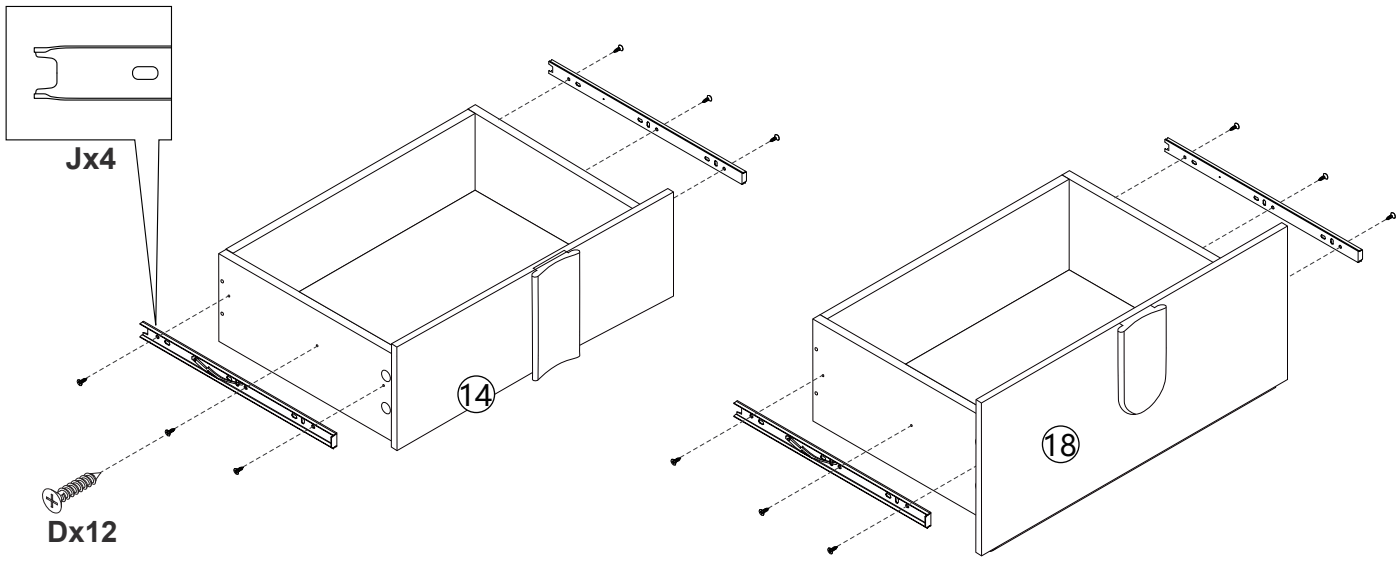

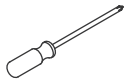	D x 12	J x 4

Step 16:

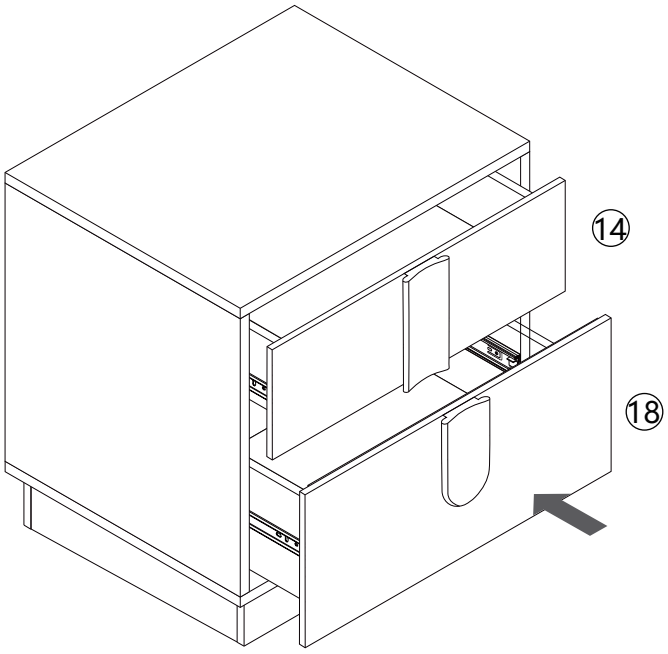

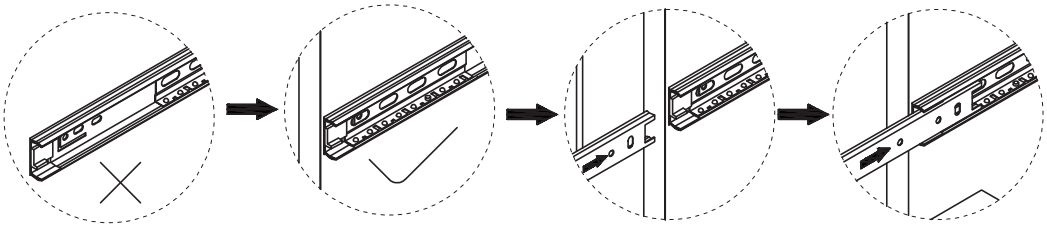

Step 15:

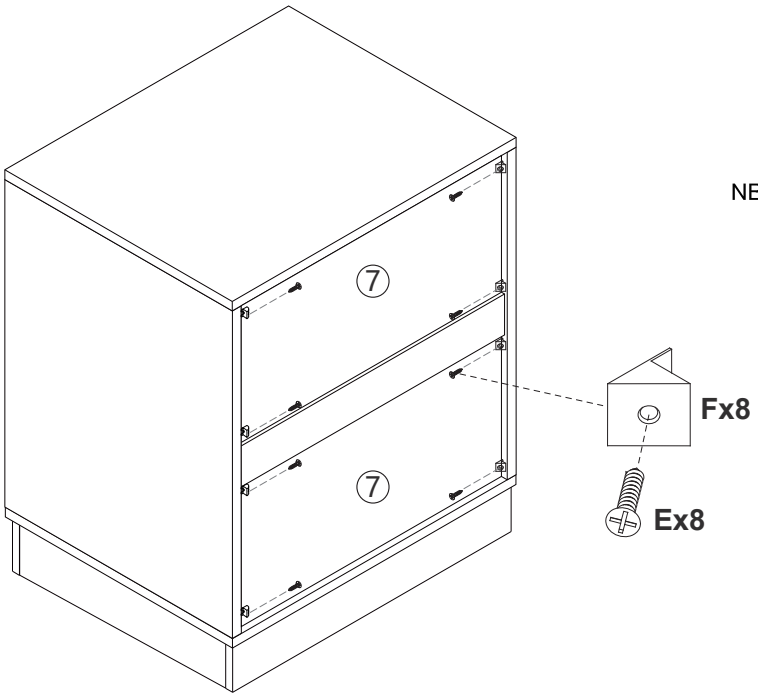

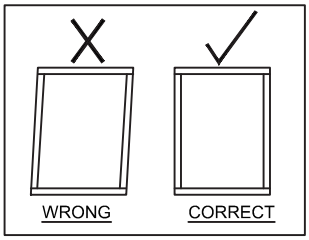

NB: Before tightening the plastic buckles and screws, please ensure the frame is square

	E x 8	F x 8

Step 16:

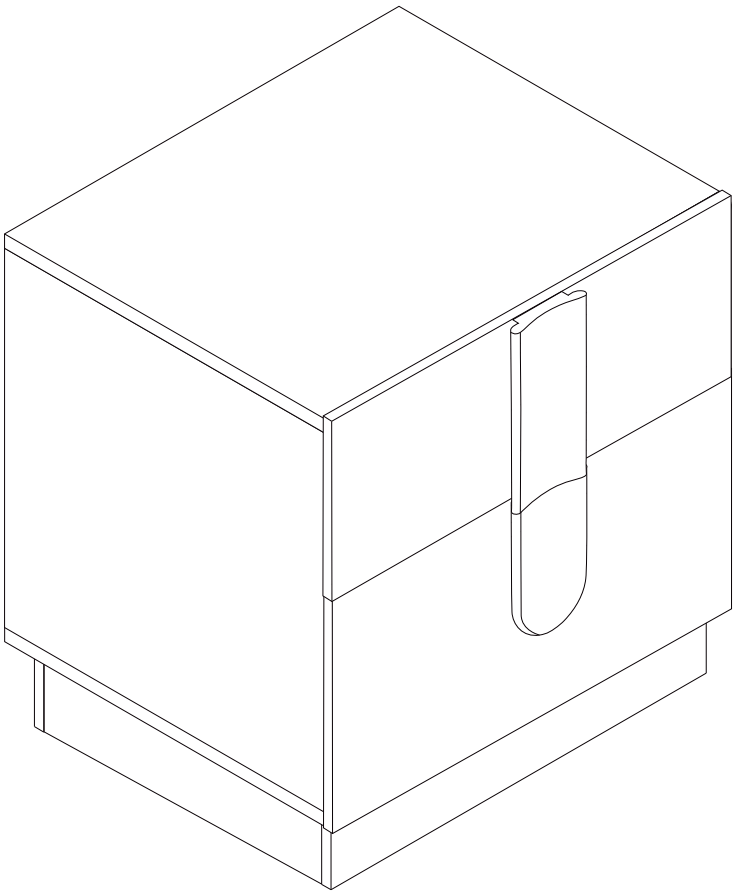

Wood care advice

Wood care advice

Wood is a natural product and each piece is individual.

As a natural product, wood is affected by temperature and humidity. We recommend that you avoid placing the furniture directly in front of heat sources such as radiators or fires as this can cause cracking or warping over time.

The colour will mellow over time and new items can vary in shade from items that you have already purchased.

Strong direct sunlight can affect the colour dramatically, so try to avoid this as much as possible, we also recommend that any ornaments, coasters and items placed on the product are periodically moved around to allow the colour to mellow evenly.

Always use matts and coasters to protect the surface when placing items on the furniture. This will help to protect the finish from heat, liquids or items that might scratch your furniture.

If items are to be placed on the surface of your furniture and have rubber feet, it is advisable to use mats to prevent marking.

Always lift your furniture into place, avoid dragging it across the floor as this can cause damage to joints.

When placing furniture on a wooden or laminate floor, please ensure that the plastic or felt protectors are securely fitted and in place.

Only clean using a damp cloth and mild detergent, do not use bleach or abrasive cleaners.

From time to time check that there are no loose screws on this unit.

Remove any spills immediately to avoid staining.

Dust regularly with a soft lint free cloth or duster.

The use of abrasive polish or silicon based polishes is not advised as these can affect the polished finish and joints over time.

Uneven floors could give the impression that doors of wall units and wardrobes are out of alignment. Be aware of this and compensate if necessary by adjusting the hinges or packing a corner to level the item. Please refer to the instructions, included with your furniture, and adjust accordingly.

If your furniture becomes stained, scratched, chipped or suffers other damage, we recommend professional help is sought to restore it. Please contact our customer services line for recommended agents.

Always follow fitting instructions carefully and retain them for future use.