Assembly Instruction

CBN141NT

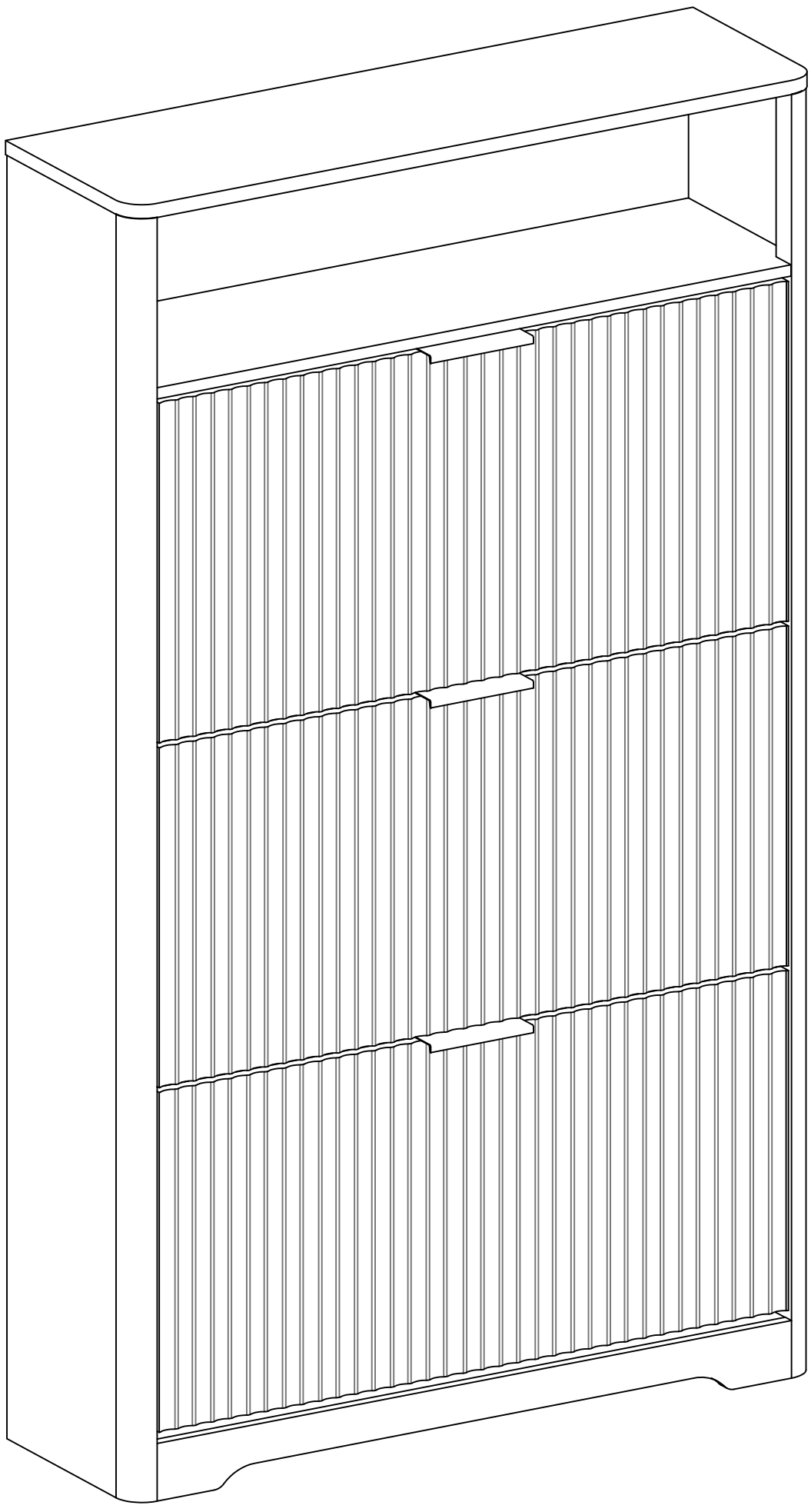

Parts List(EN)

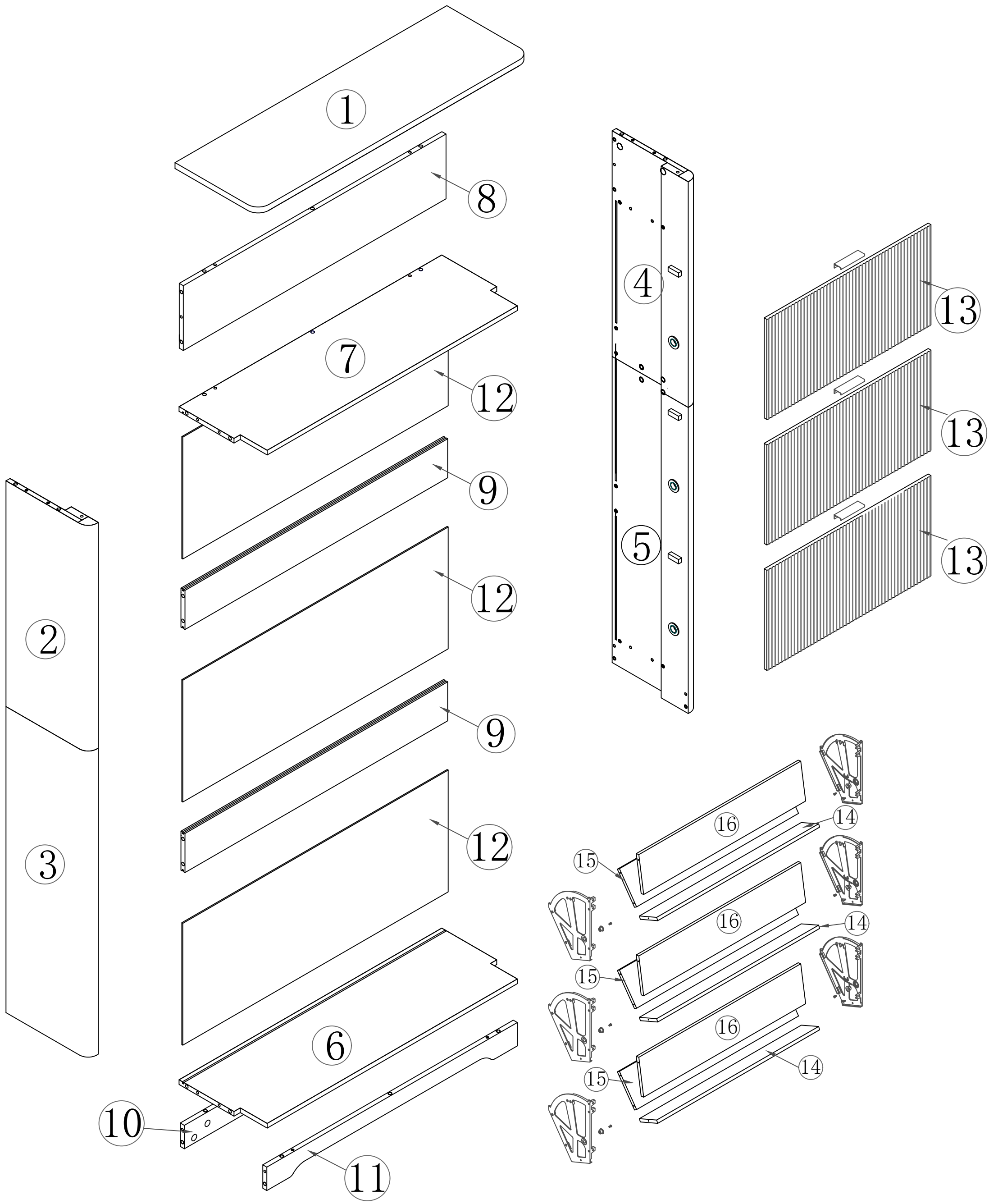

Parts List(EN)

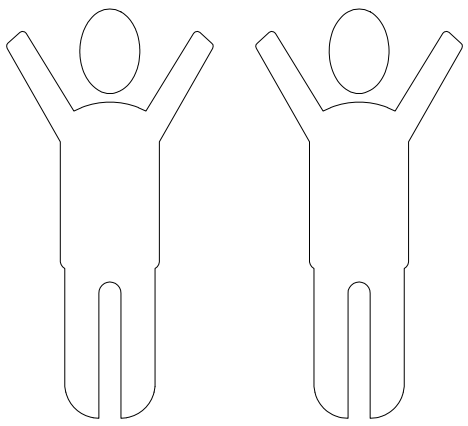

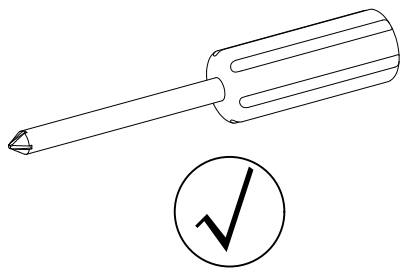

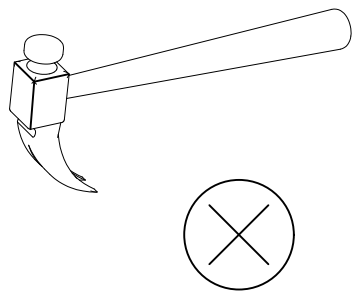

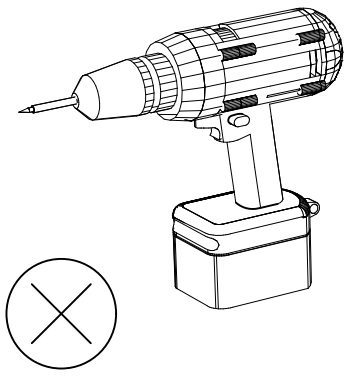

① 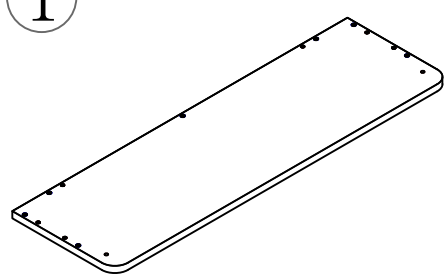 1PCS	② 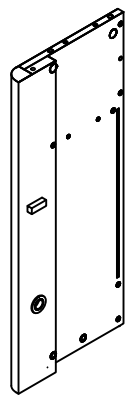 1PCS	③ 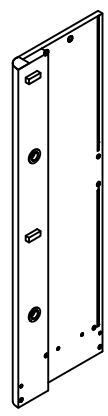 1PCS	④ 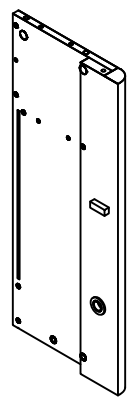 1PCS
⑤ 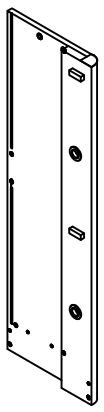 1PCS	⑥ 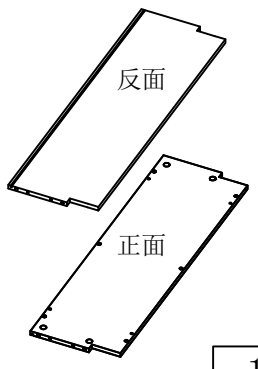 1PCS	⑦ 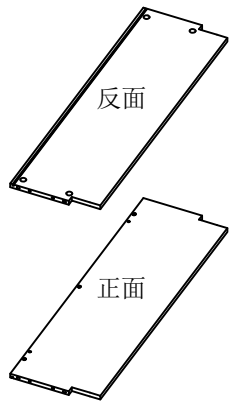 1PCS	⑧ 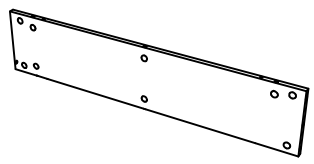 1PCS
⑨ 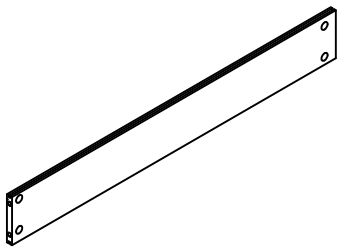 2PCS	⑩ 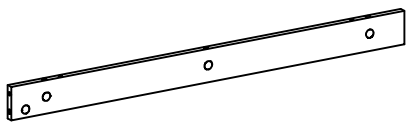 1PCS	⑪ 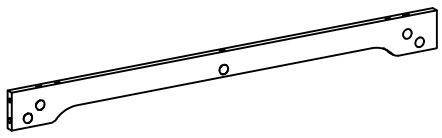 1PCS	⑫ 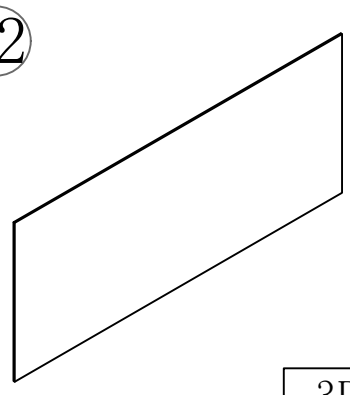 3PCS
⑬ 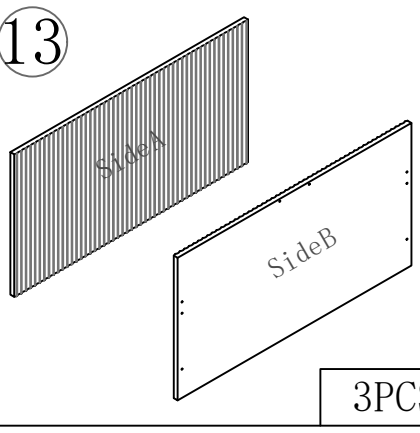 3PCS	⑭ 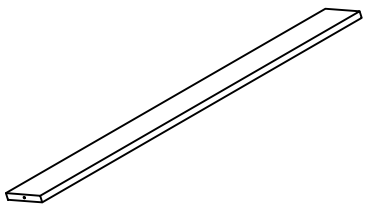 3PCS	⑮ 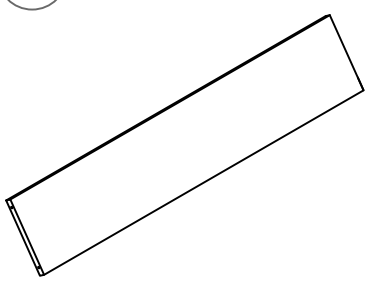 3PCS	⑯ 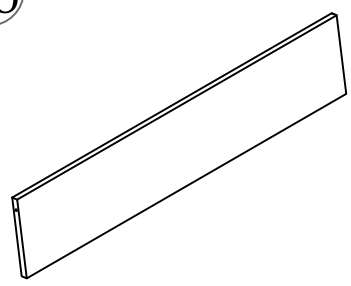 3PCS

Parts List(EN)

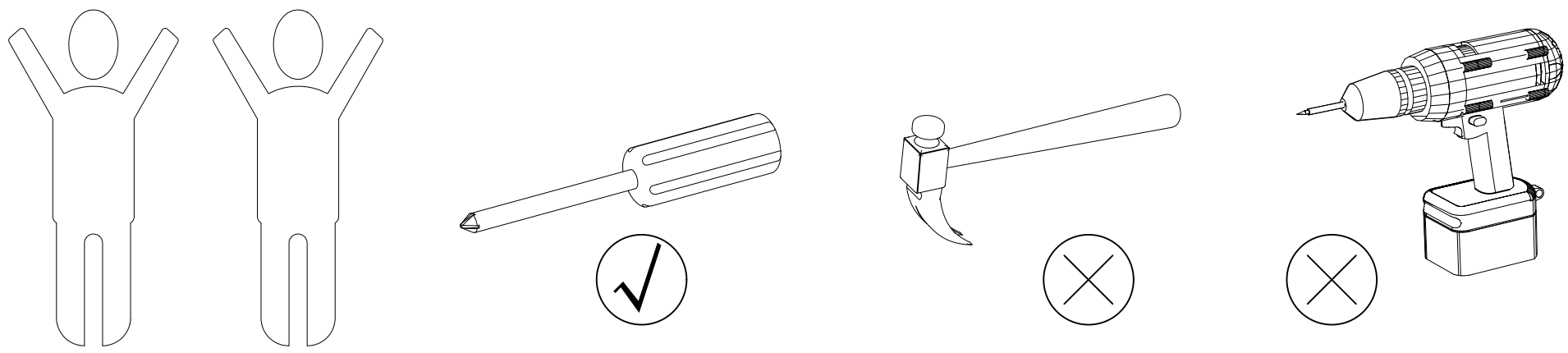

A 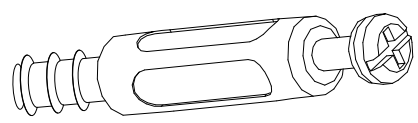 ϕ6*35mm 40+2PCS	B 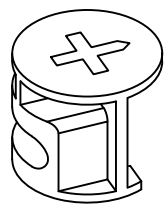 ϕ15*9.5mm 40+2PCS	C 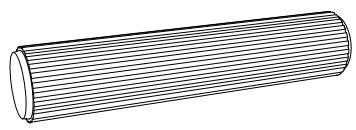 ϕ6*30mm 36+2PCS
D 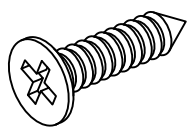 Ø3.5*14mm 36+2PCS	E 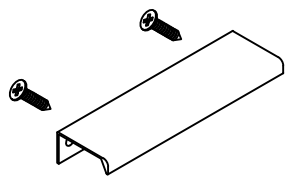 Handle 3 sets	F 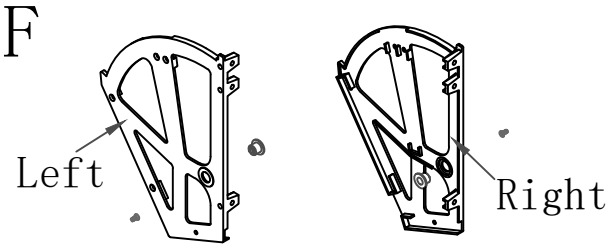 3 sets
G 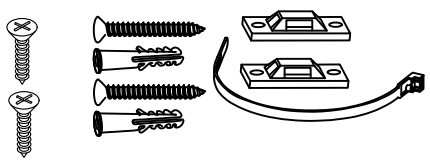 1 sets	H 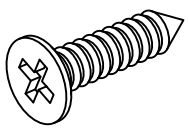 Ø3.5*16mm 18+2PCS	I 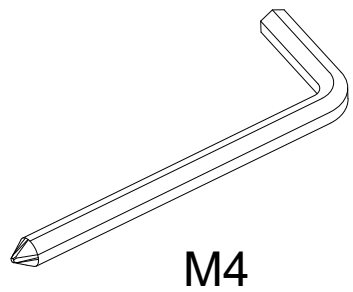 M4 1 PCS
J 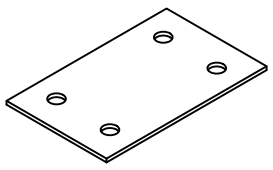 2 PCS	K 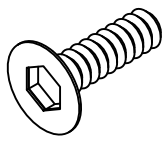 M6*12mm 8+1PCS	L Ø21mm 8+2PCS
M 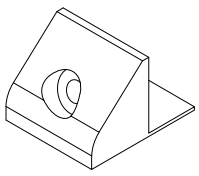 12+2 PCS		

Assembly Steps(EN)

Step 1

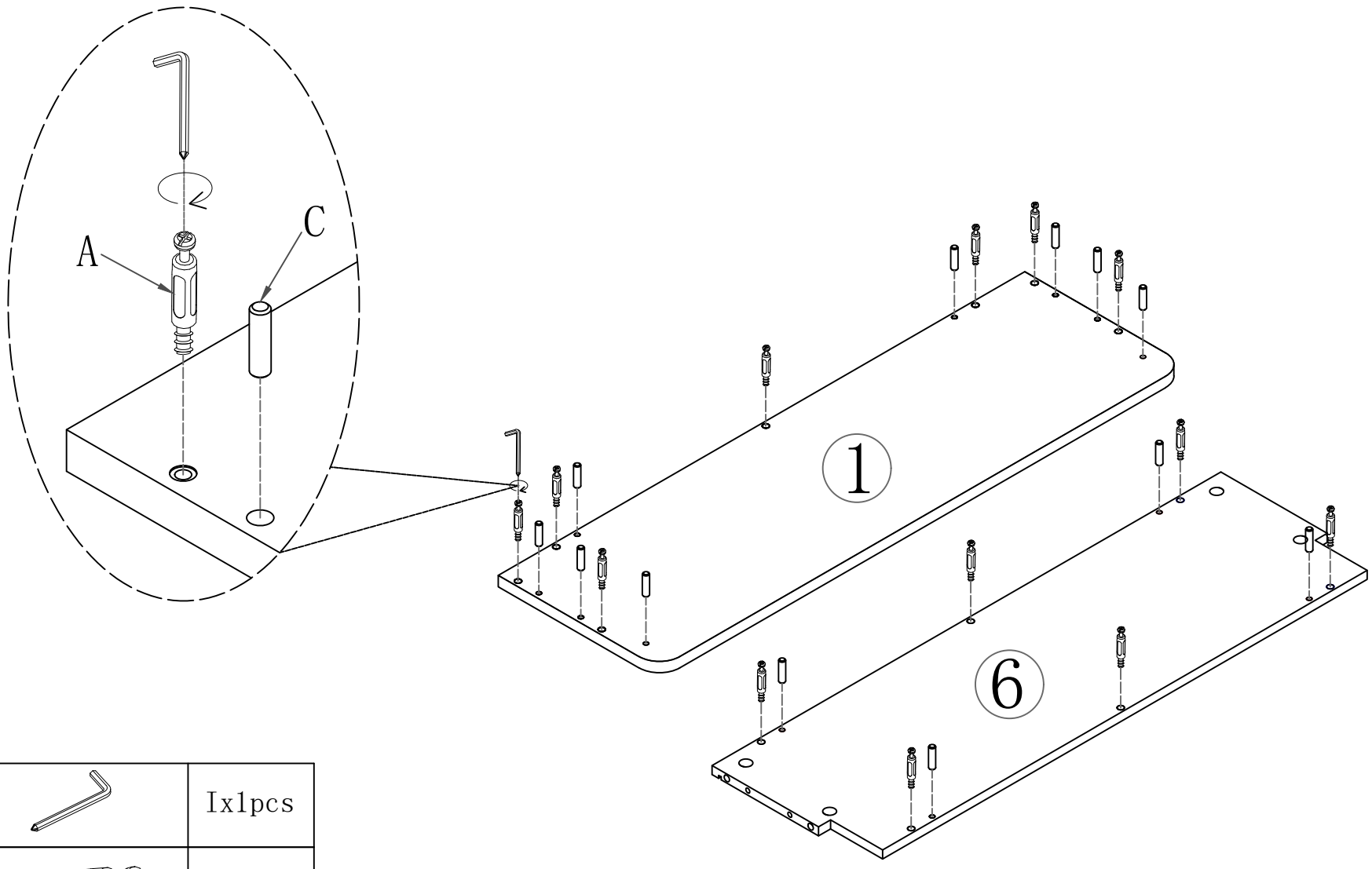

	Ix1pcs
	Ax13pcs
	Cx12pcs

Step 2

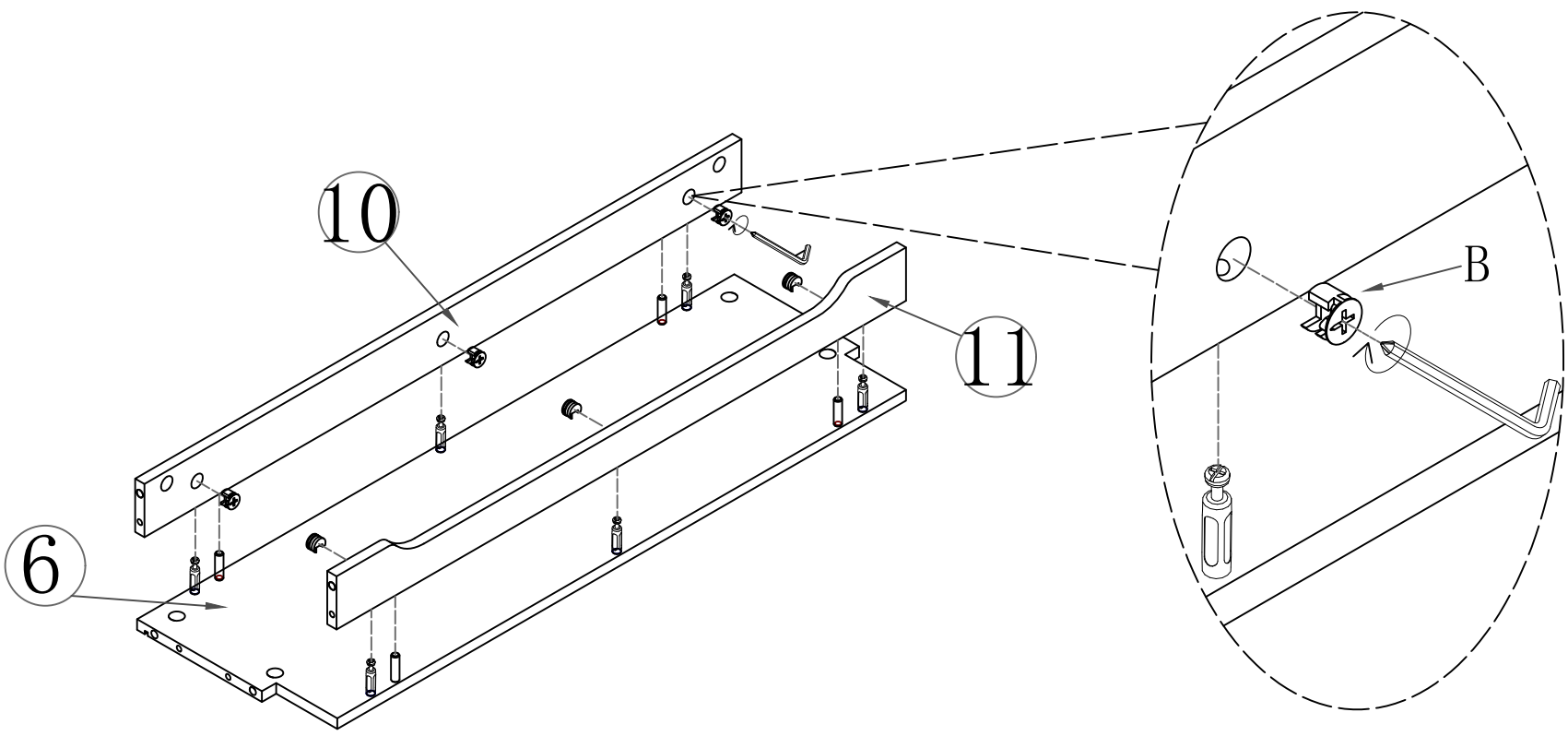

	Ix1pcs
	Bx6pcs

Step 3

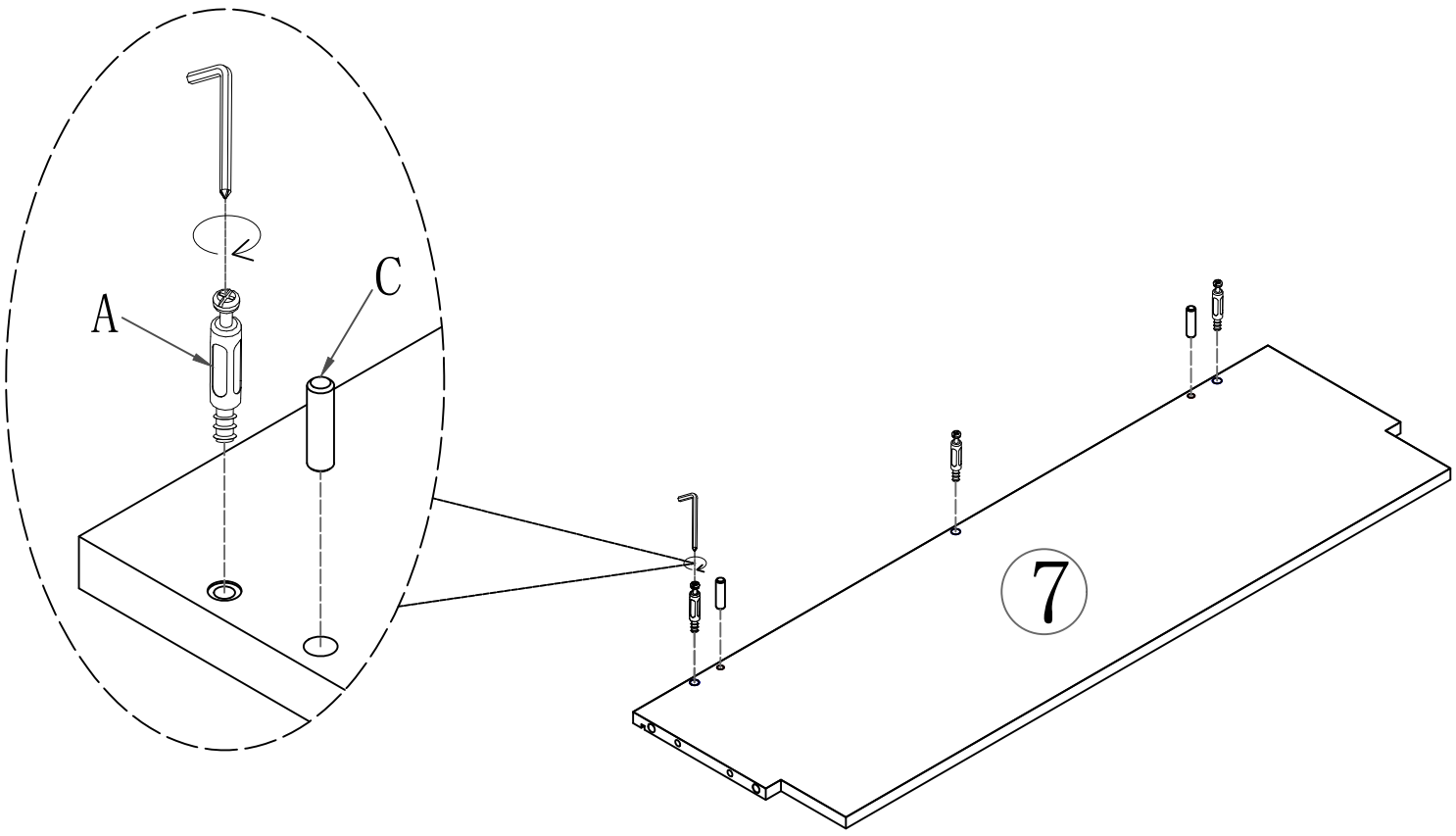

	Ix1pcs
	Ax3pcs
	Cx2pcs

Step 4

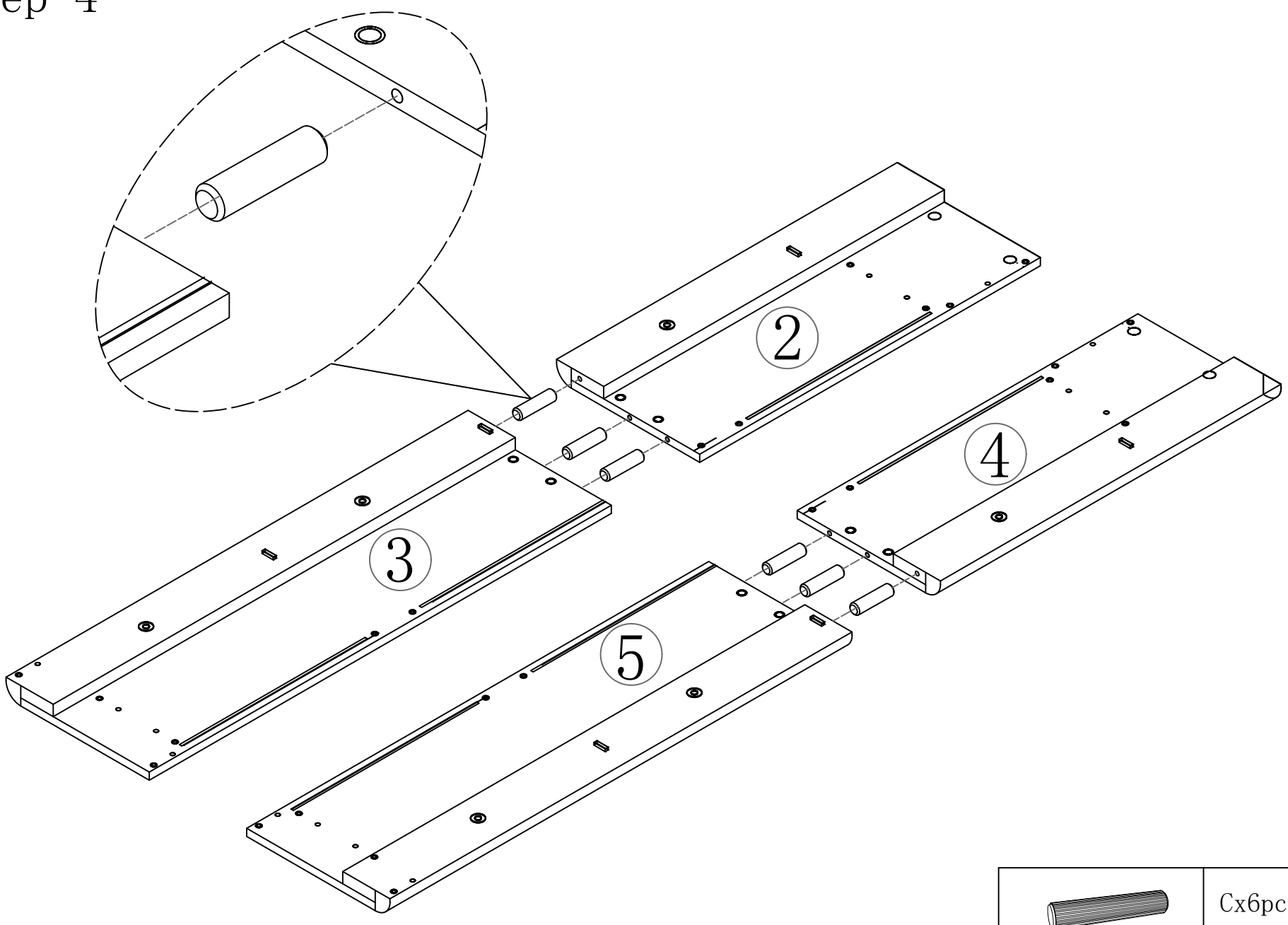

	Cx6pcs

Step 5

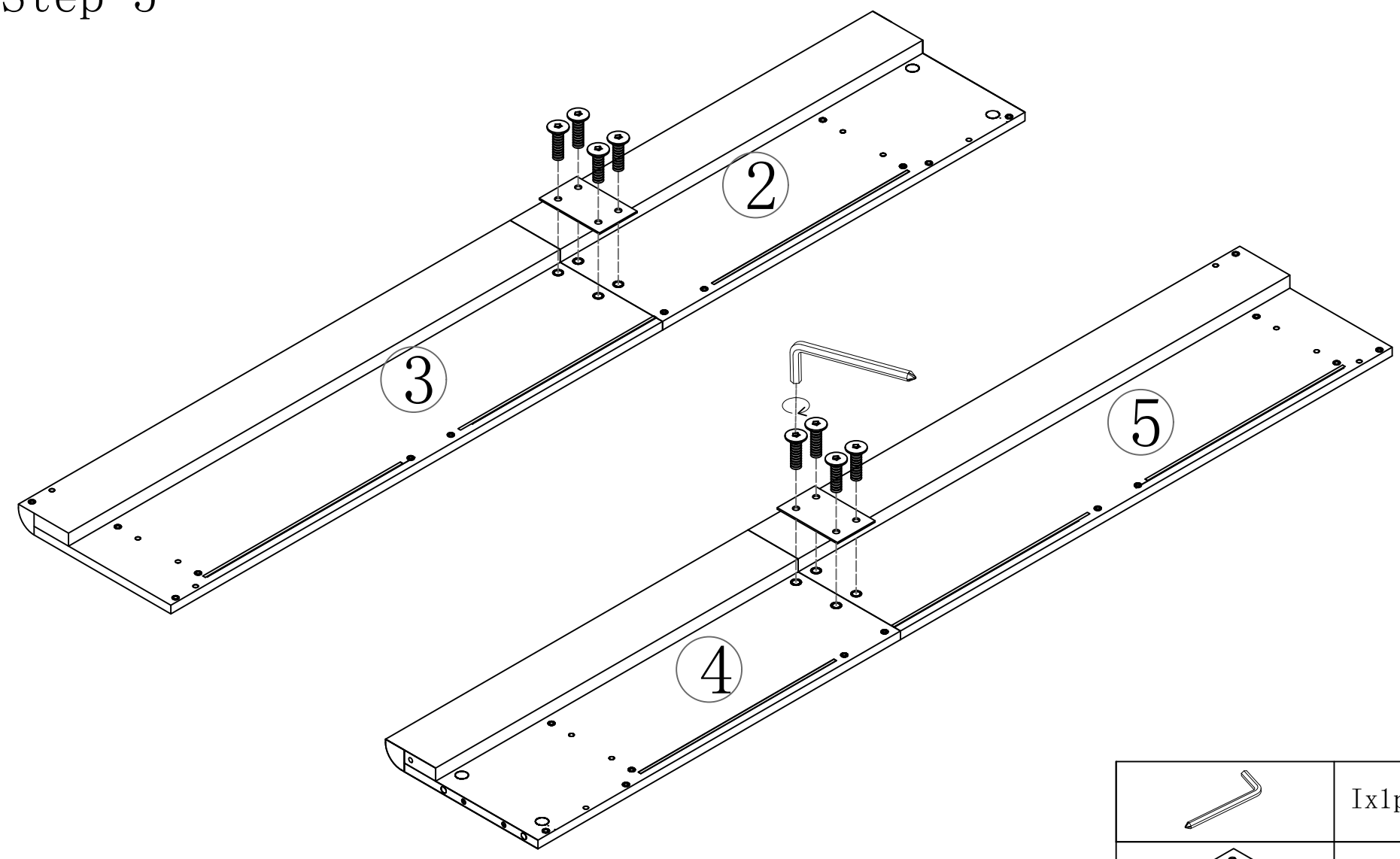

	Ix1pcs
	Jx2pcs
	Kx8pcs

Step 6

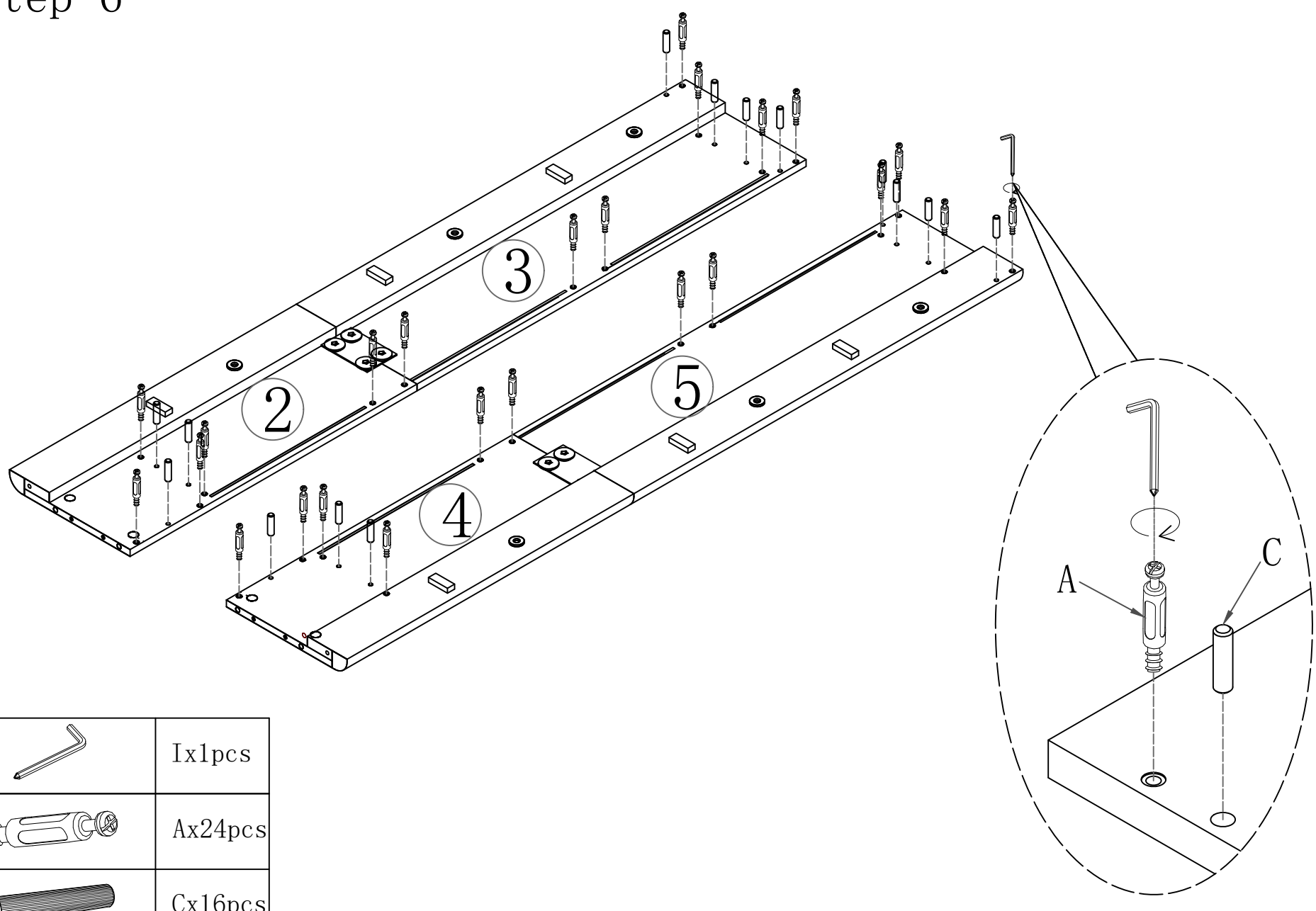

	Ix1pcs
	Ax24pcs
	Cx16pcs

Step 7

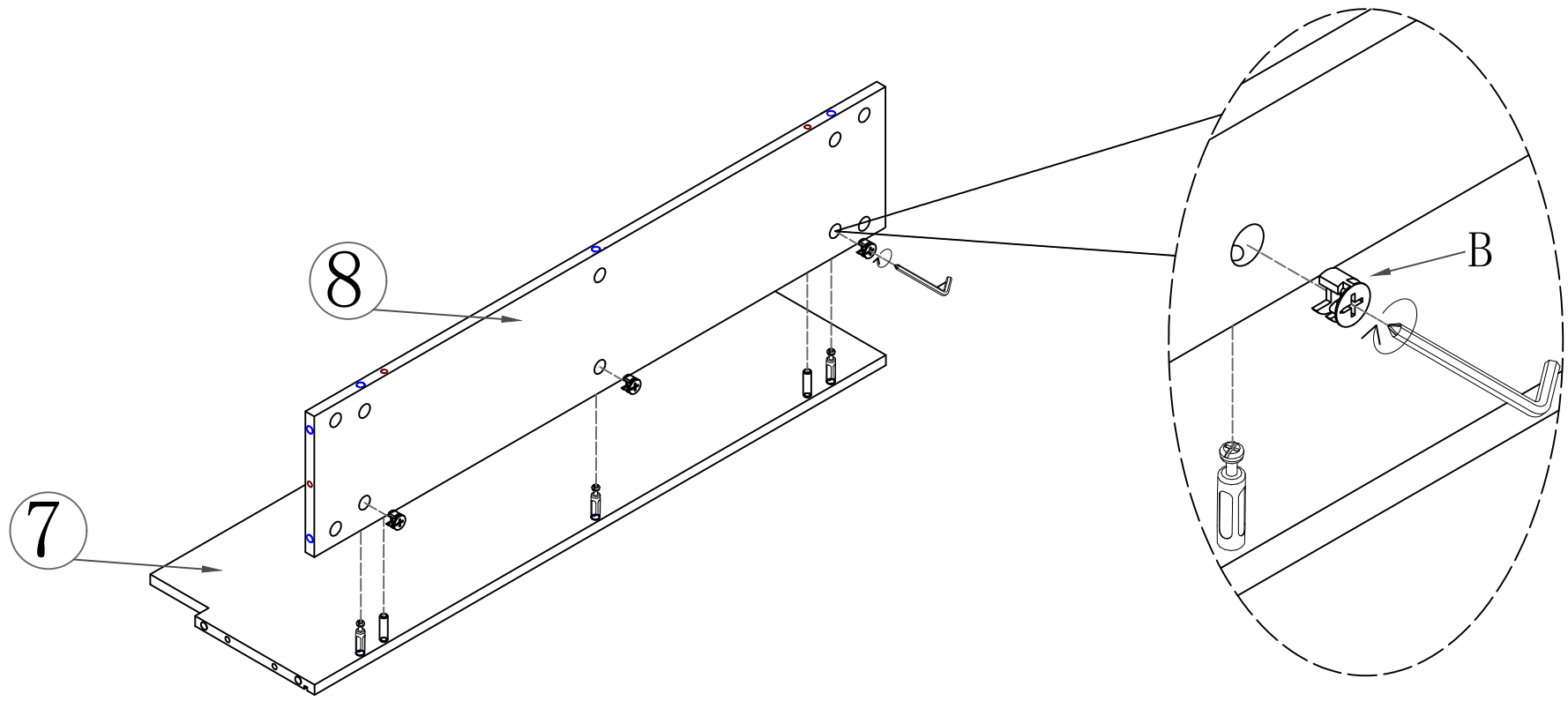

	Ix1pcs
	Bx3pcs

Step8

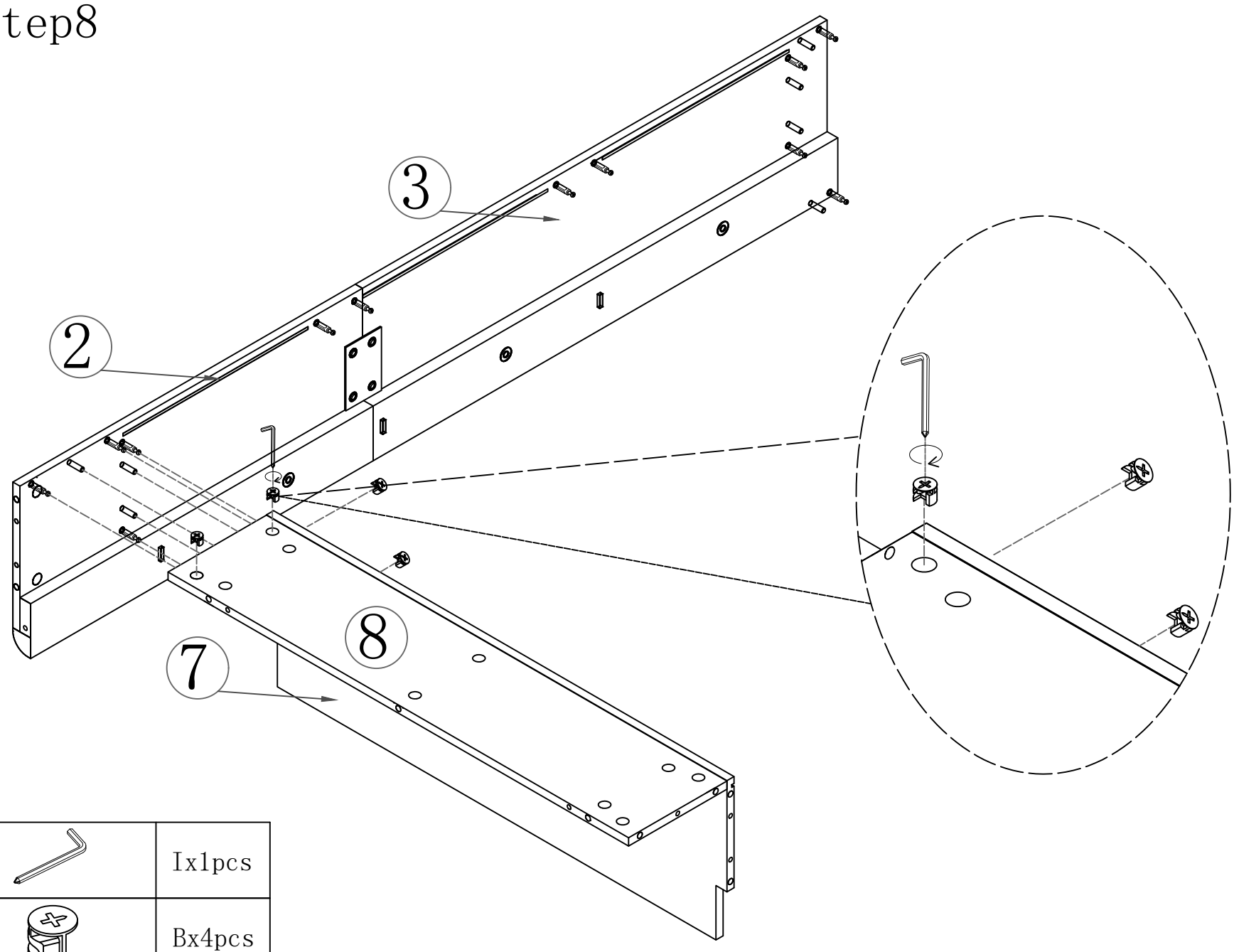

	Ix1pcs
	Bx4pcs

Assembly Steps(EN)

Step 9

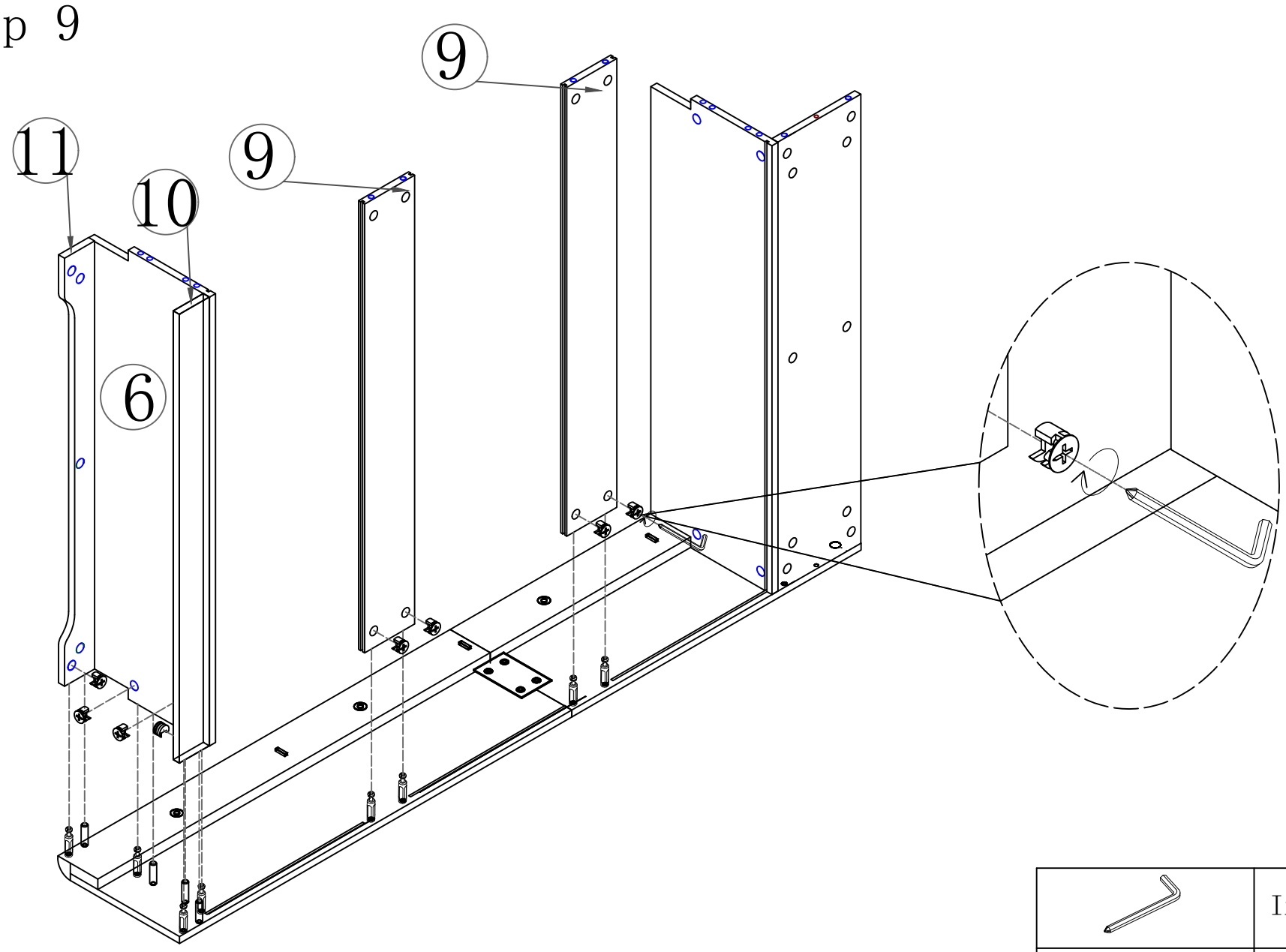

	Ix1pcs
	Bx8pcs

Step 10

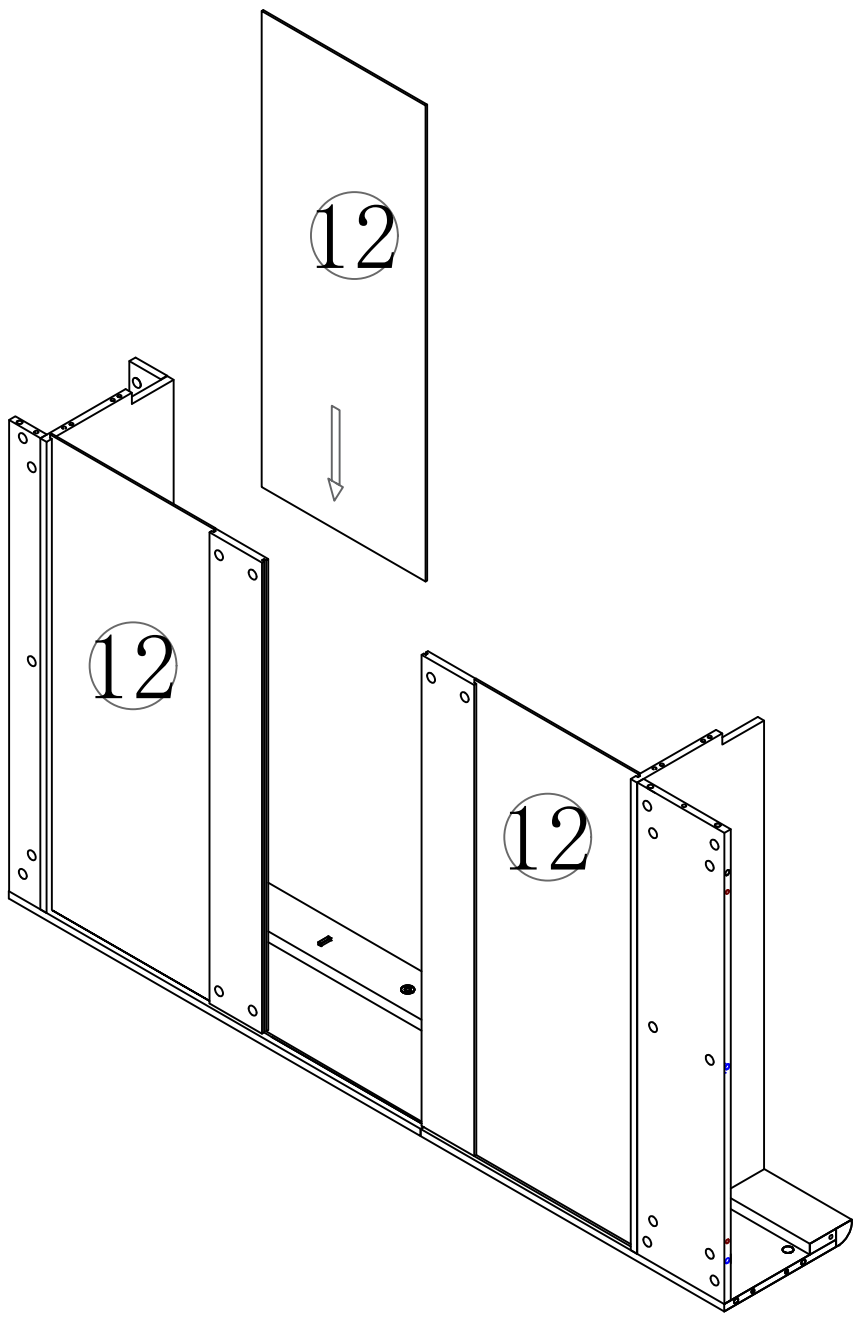

Step 11

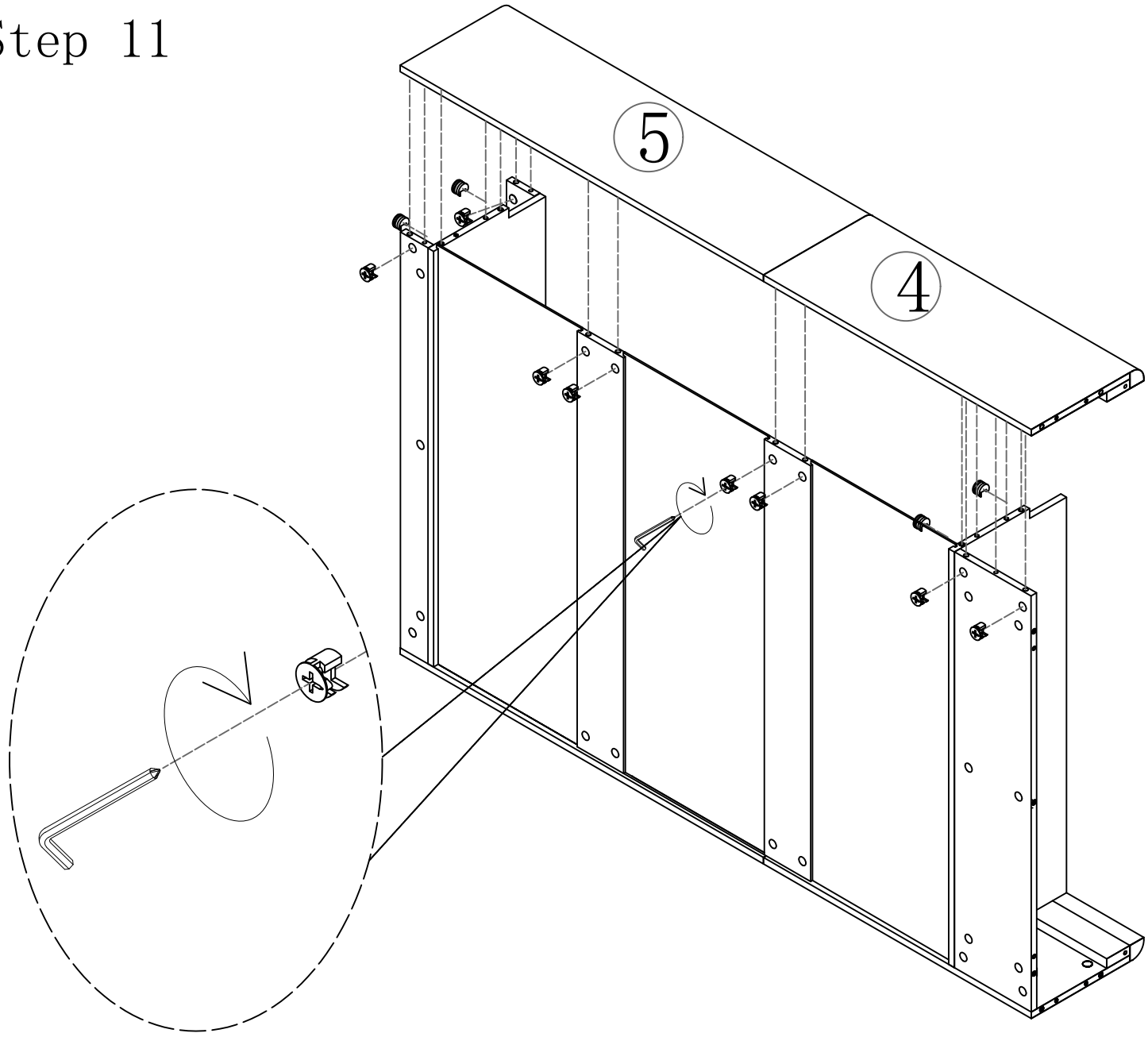

	Ix1pcs
	Bx12pcs

Step 12

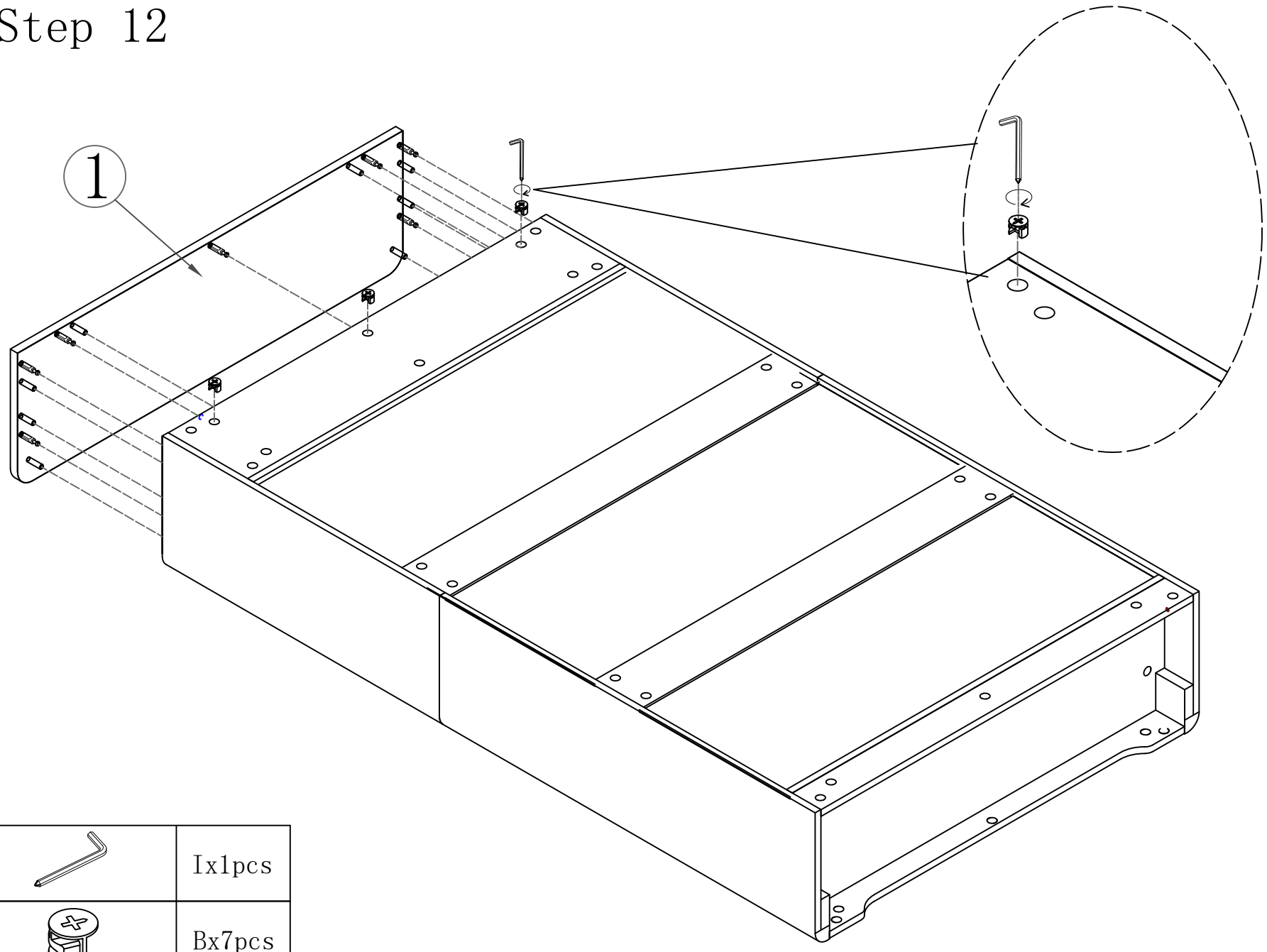

	Ix1pcs
	Bx7pcs

Assembly Steps(EN)

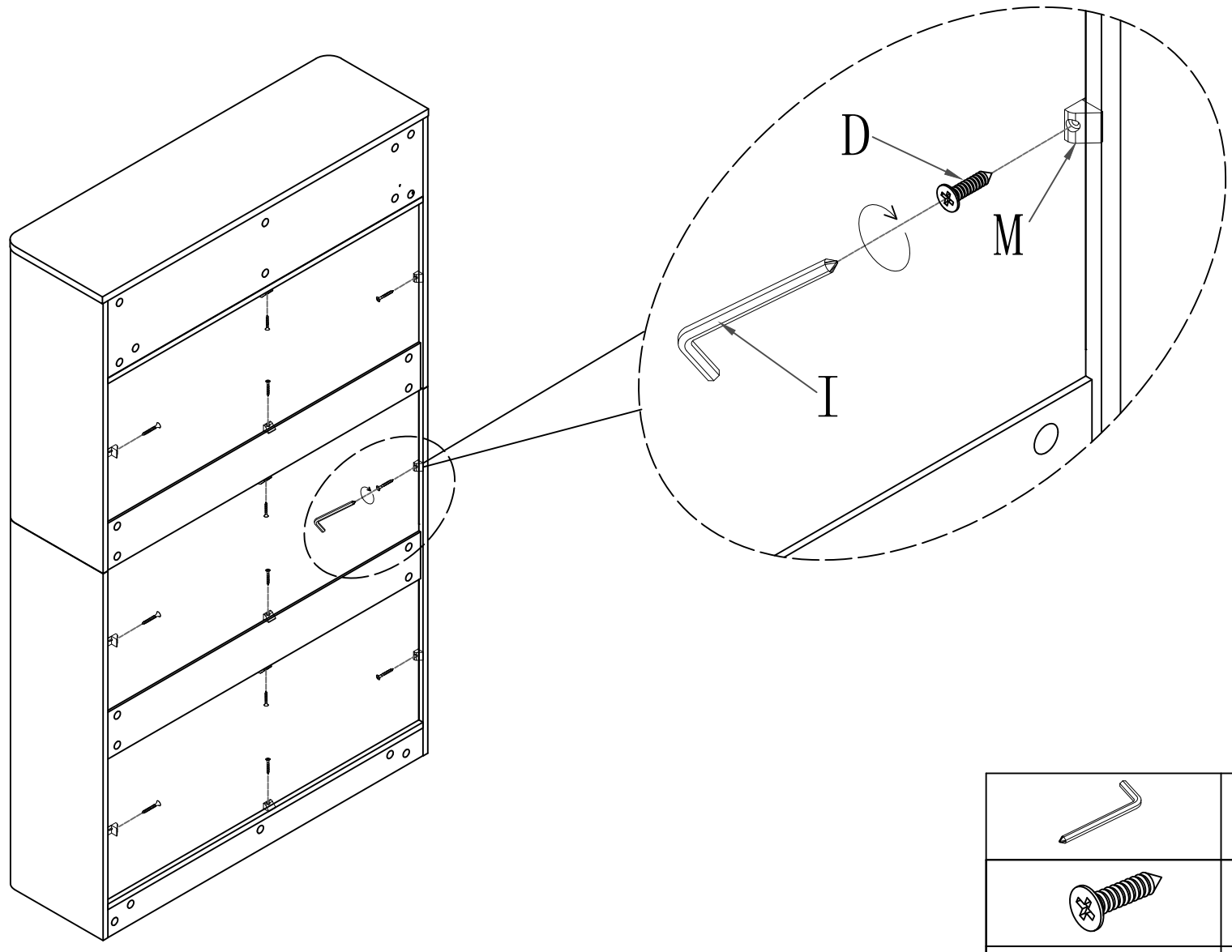

	Ix1pcs
	Dx12pcs
	Mx12pcs

Step 14

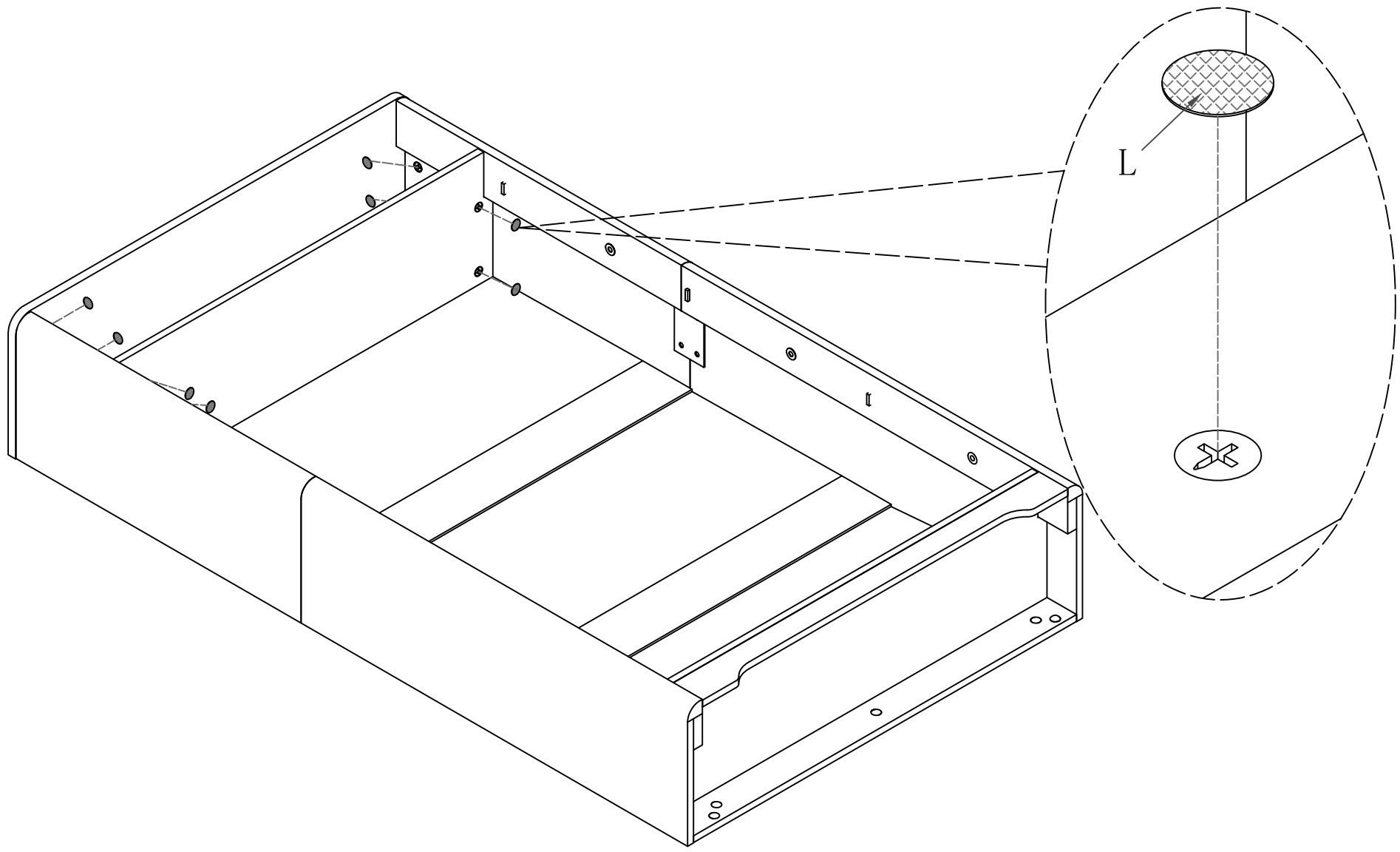

	Lx8pcs

Step 15

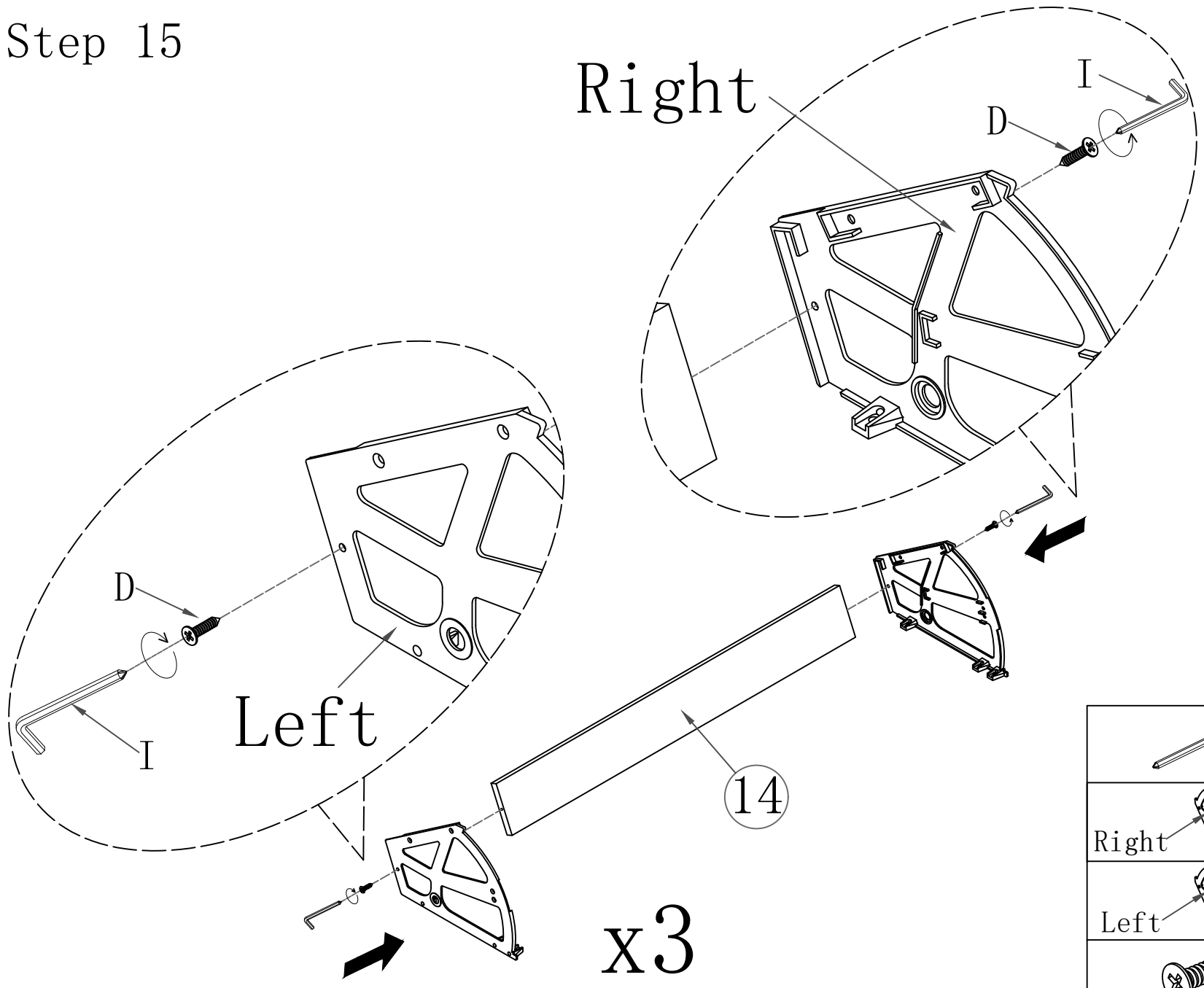

	Ix1pcs
Right	Fx2pcs
Left	Fx2pcs
	Dx6pcs

Step 16

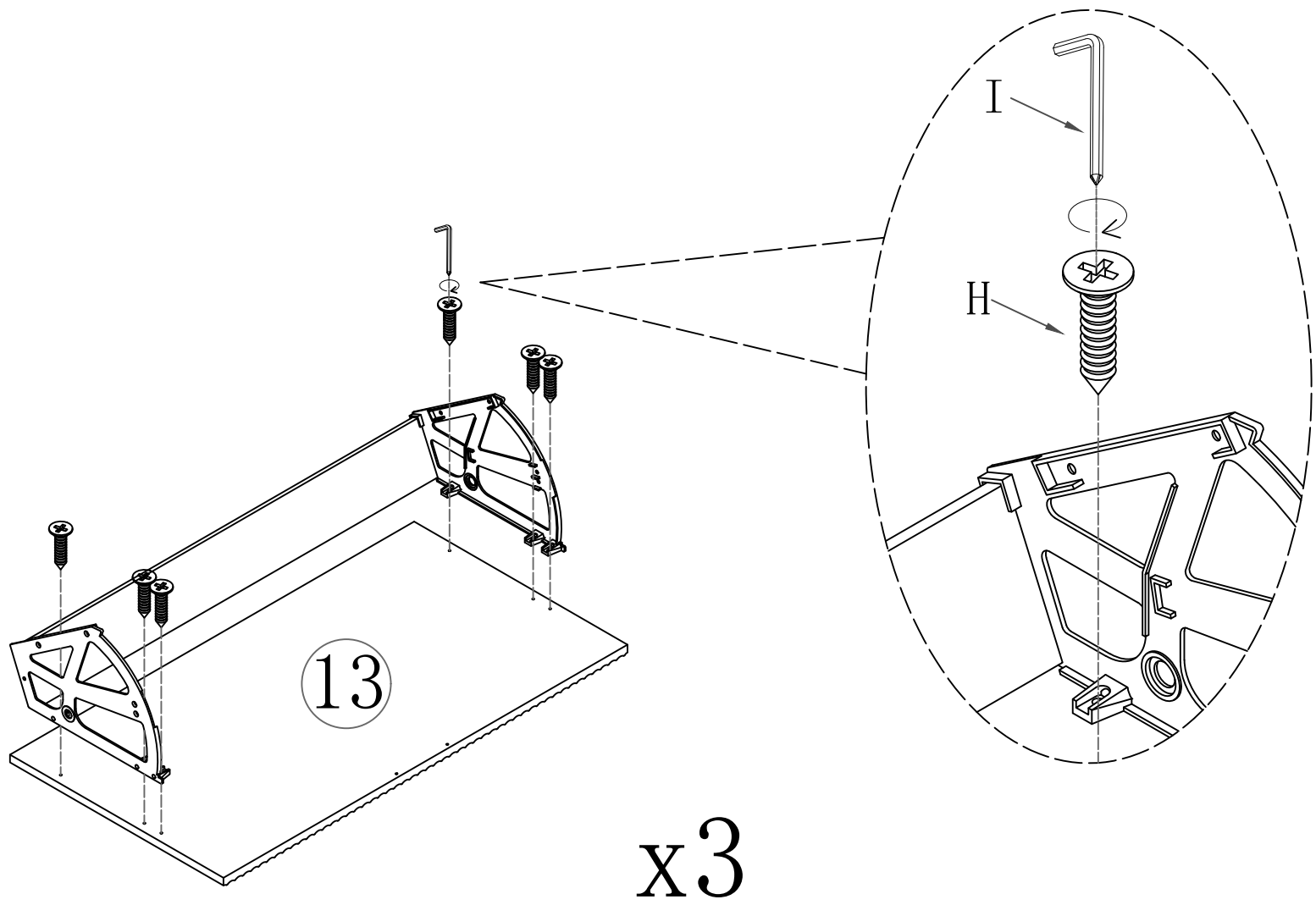

	Ix1pcs
	Hx18pcs

Step 17

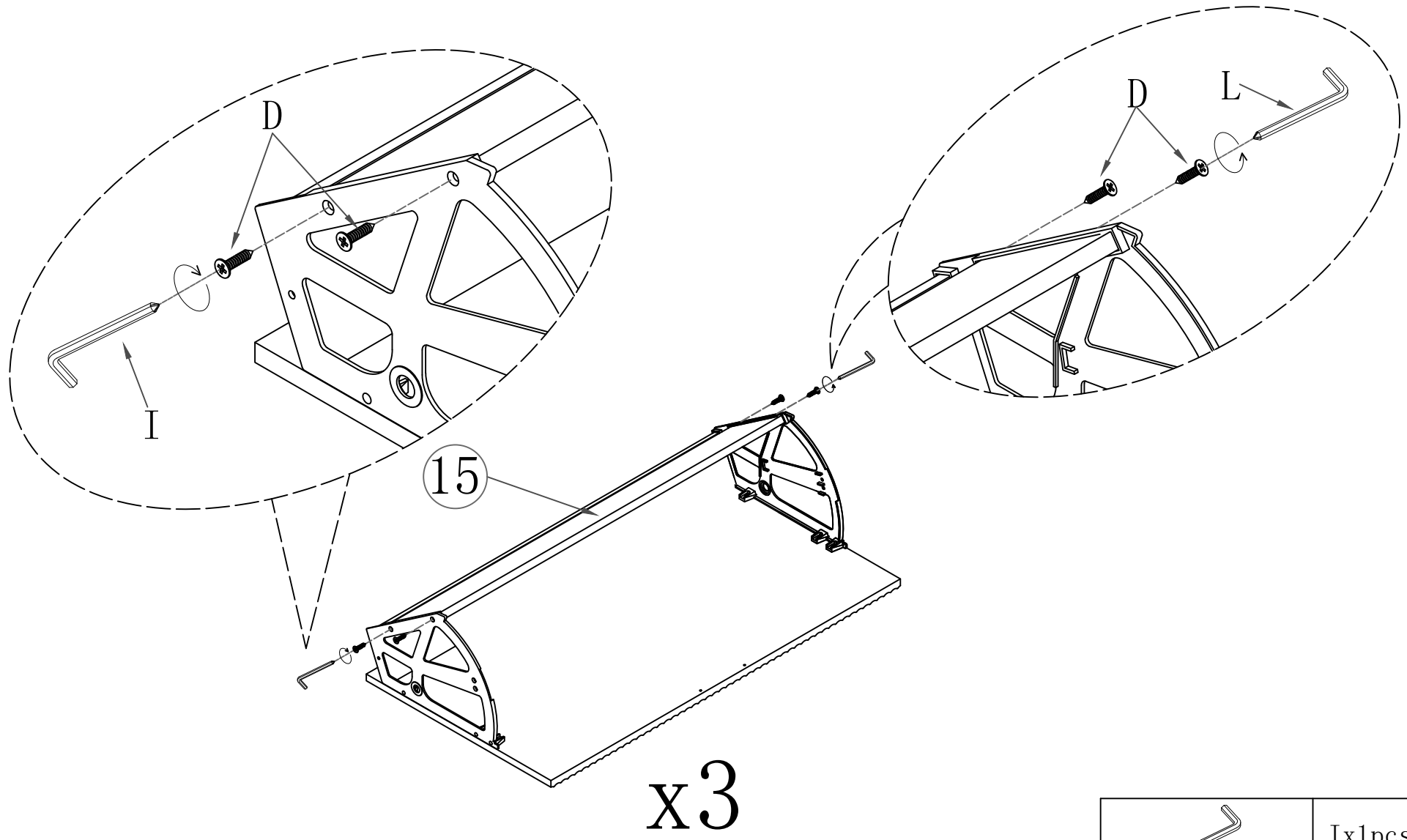

	Ix1pcs
	Dx12pcs

Step 18

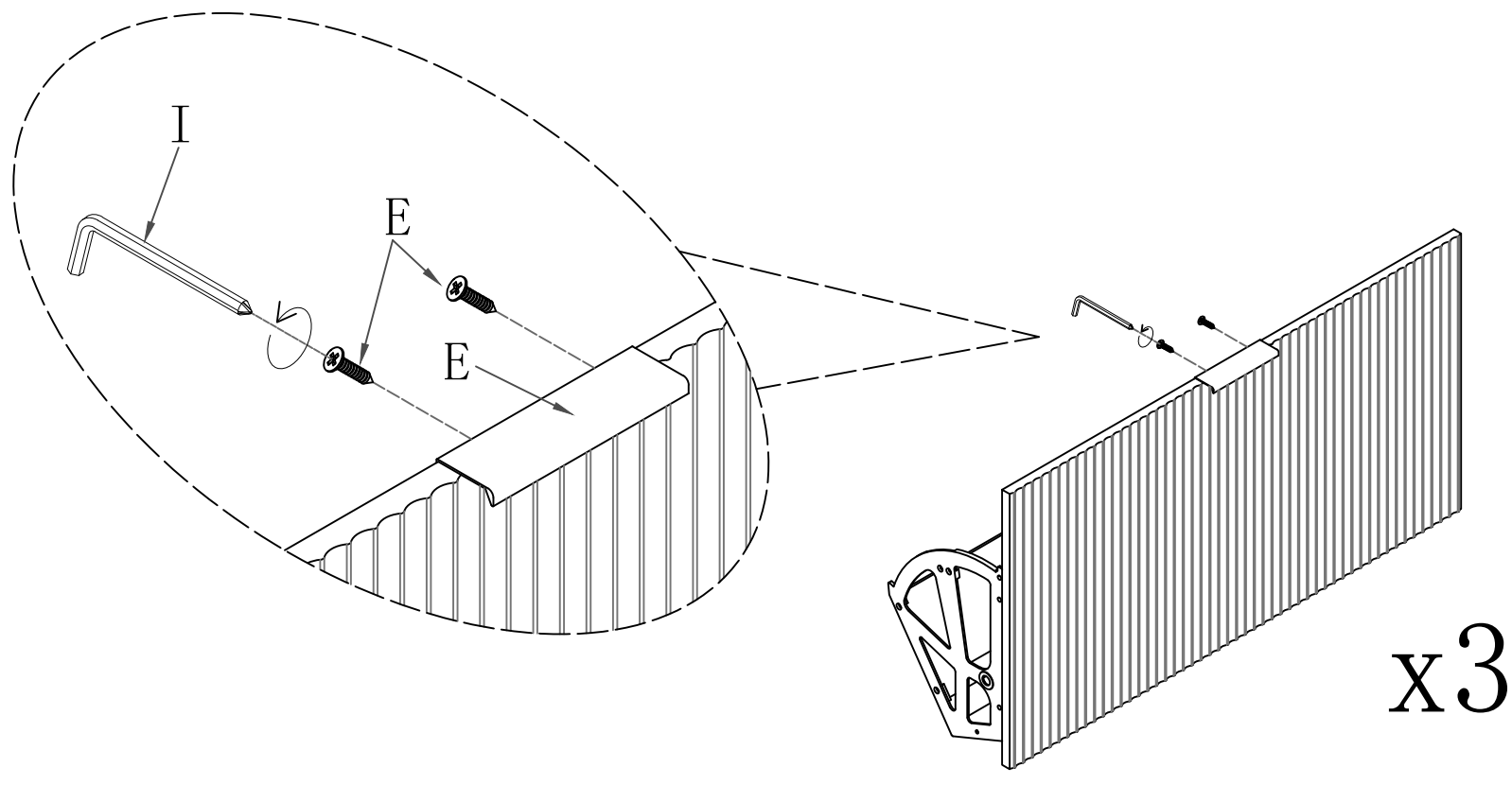

	Ix1pcs
	Ex3sets

Step 19

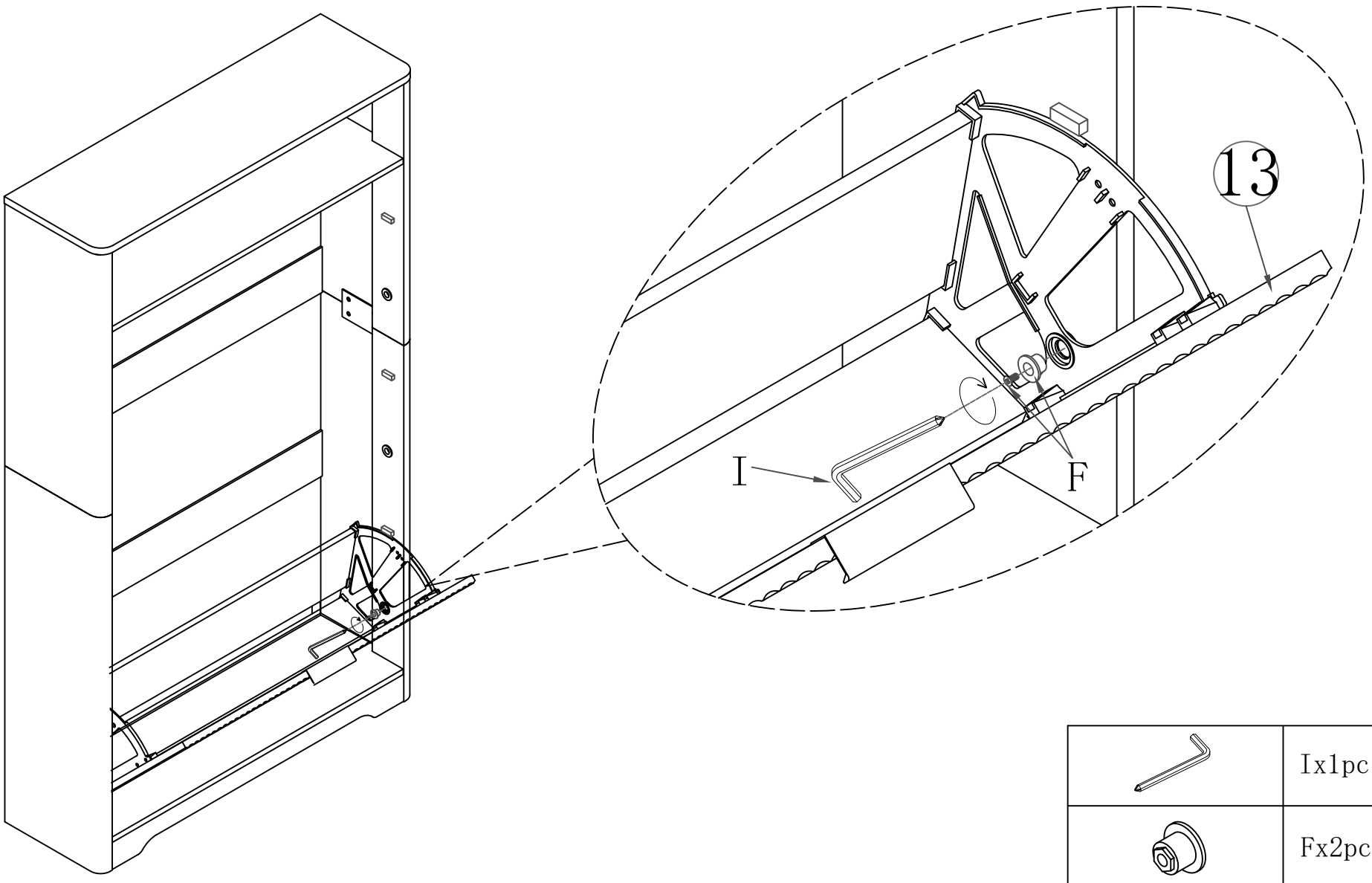

	Ix1pcs
	Fx2pcs
	Fx2pcs

Step 20

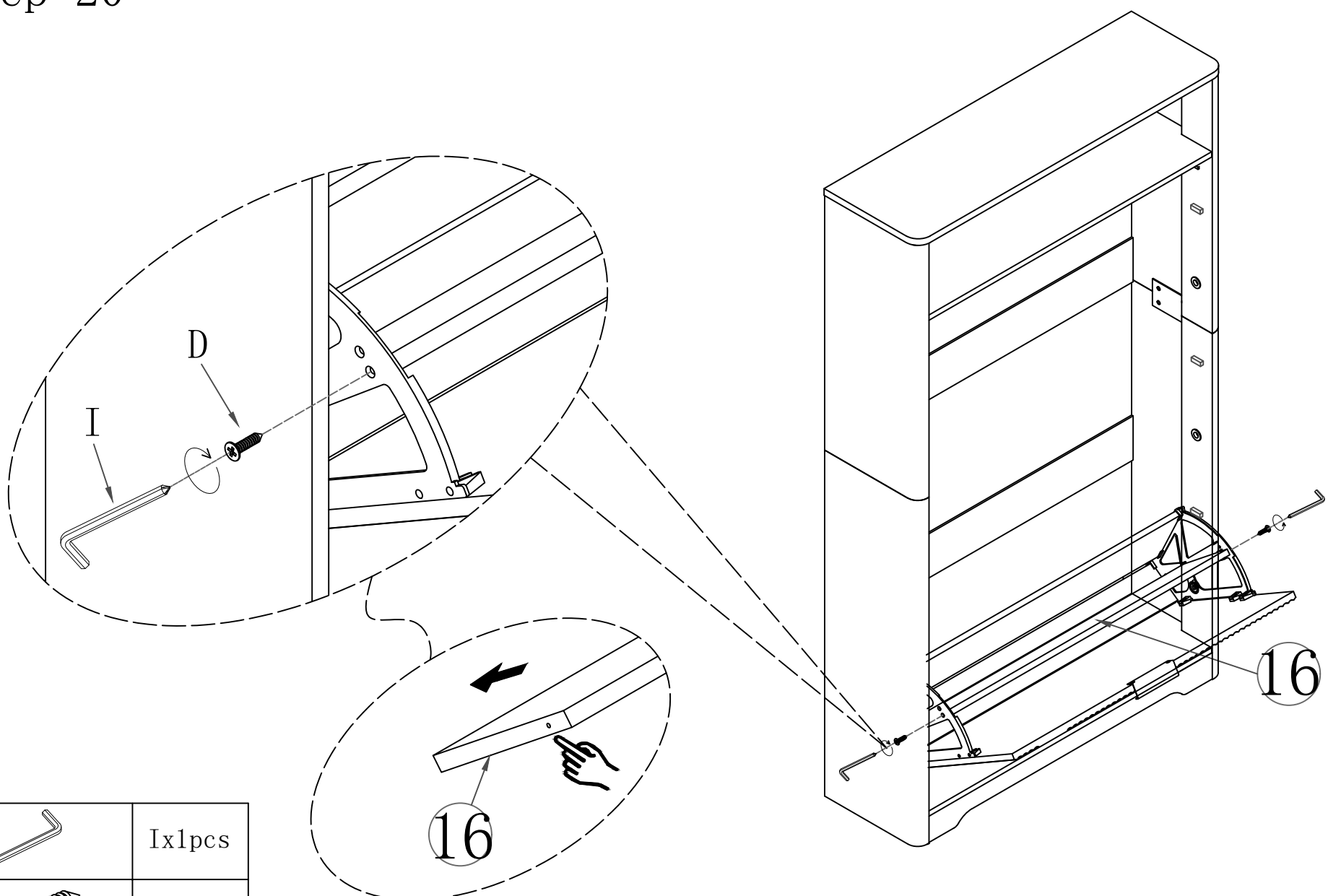

	Ix1pcs
	Dx2pcs

Step 21

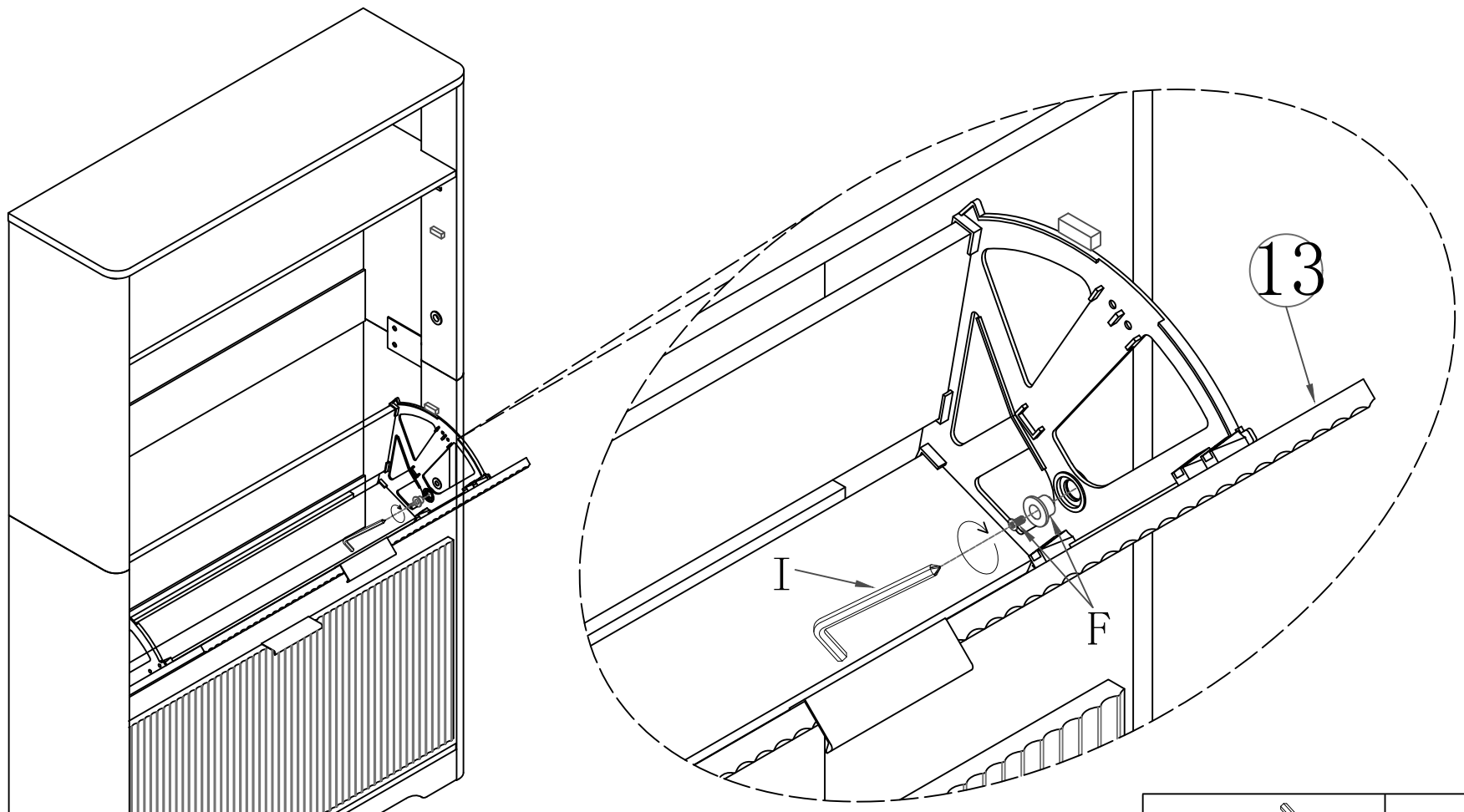

	Ix1pcs
	Fx2pcs
	Fx2pcs

Step 22

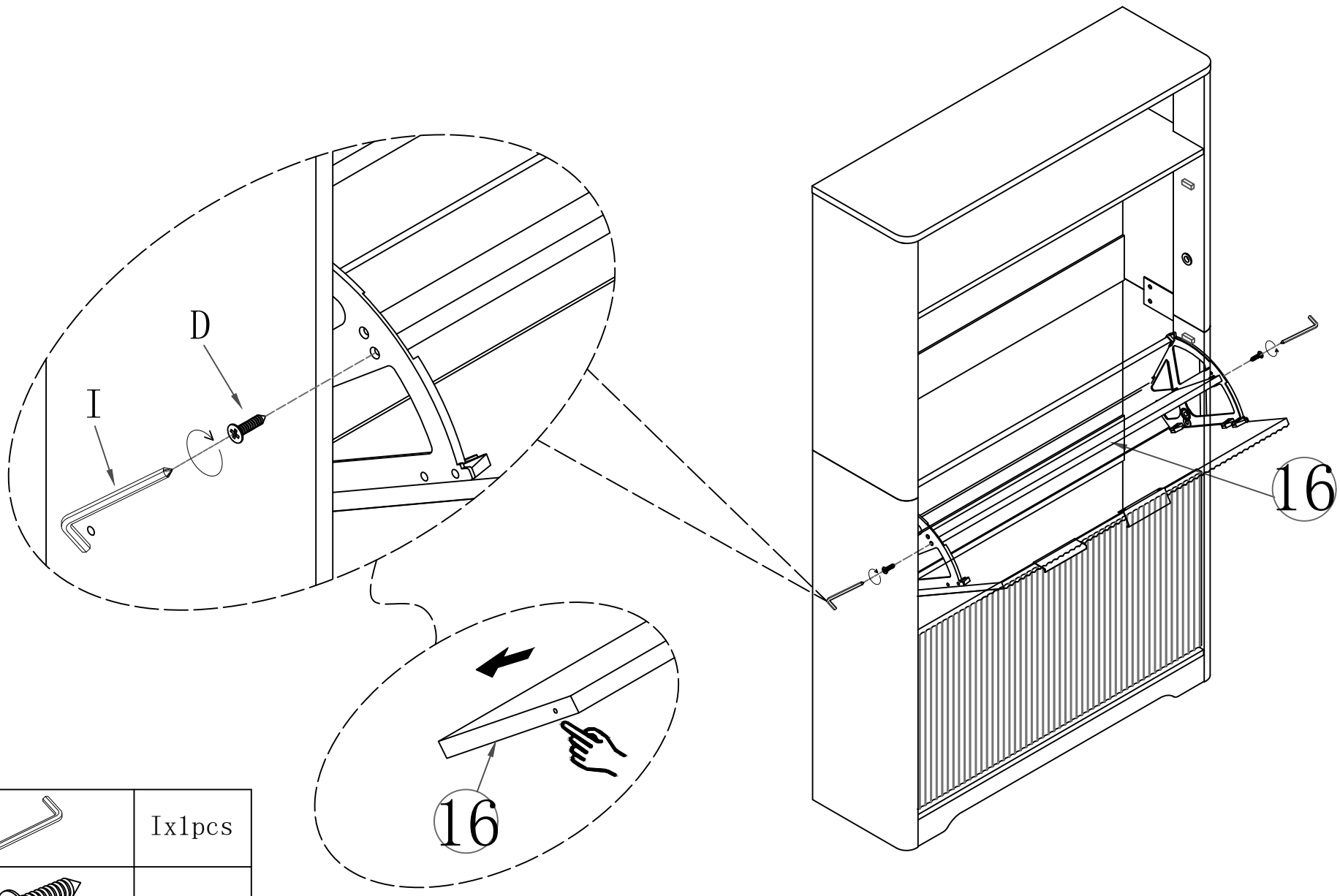

	Ix1pcs
	Dx2pcs

Step 23

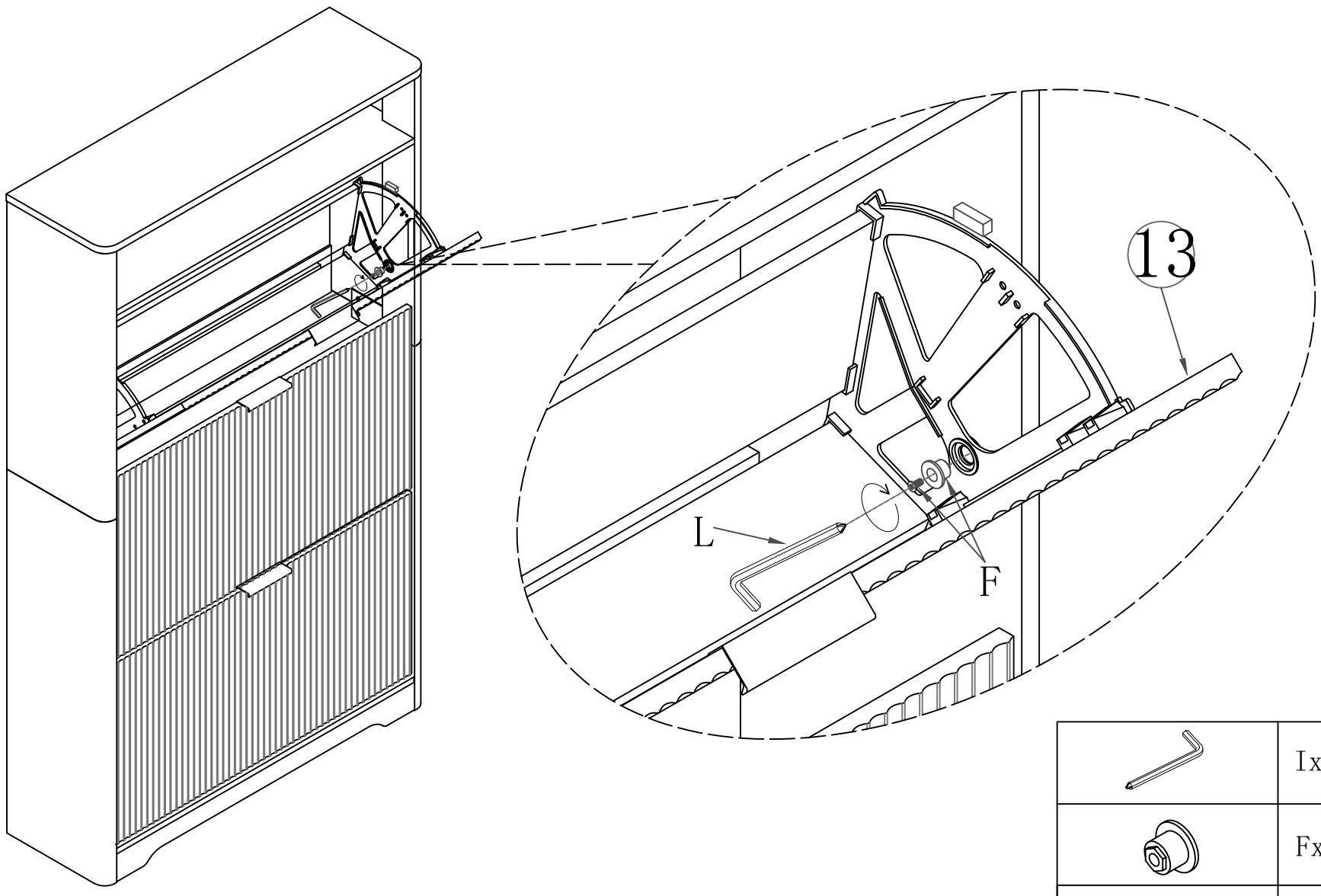

	Ix1pcs
	Fx2pcs
	Fx2pcs

Step 24

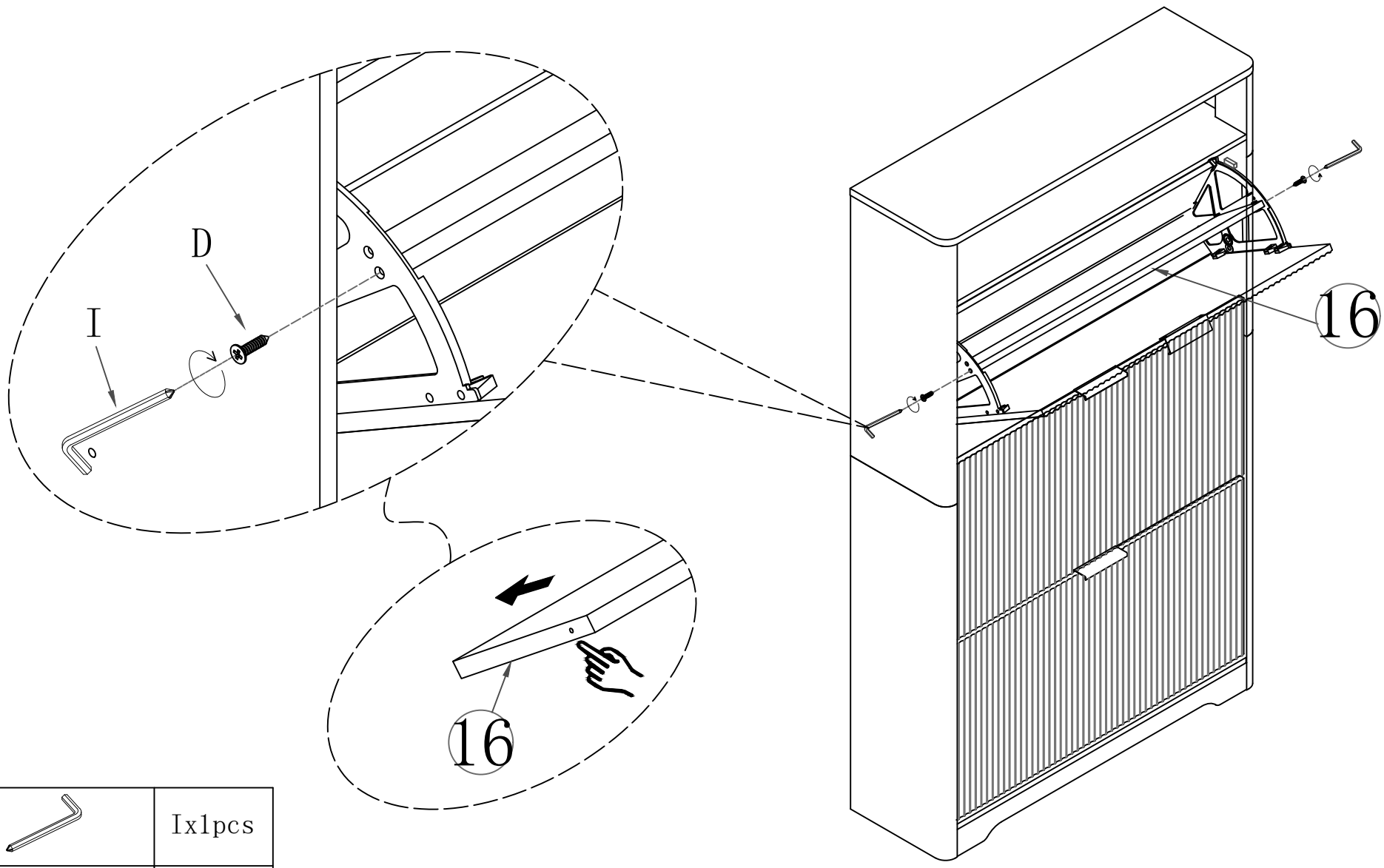

	Ix1pcs
	Dx2pcs

Step 25

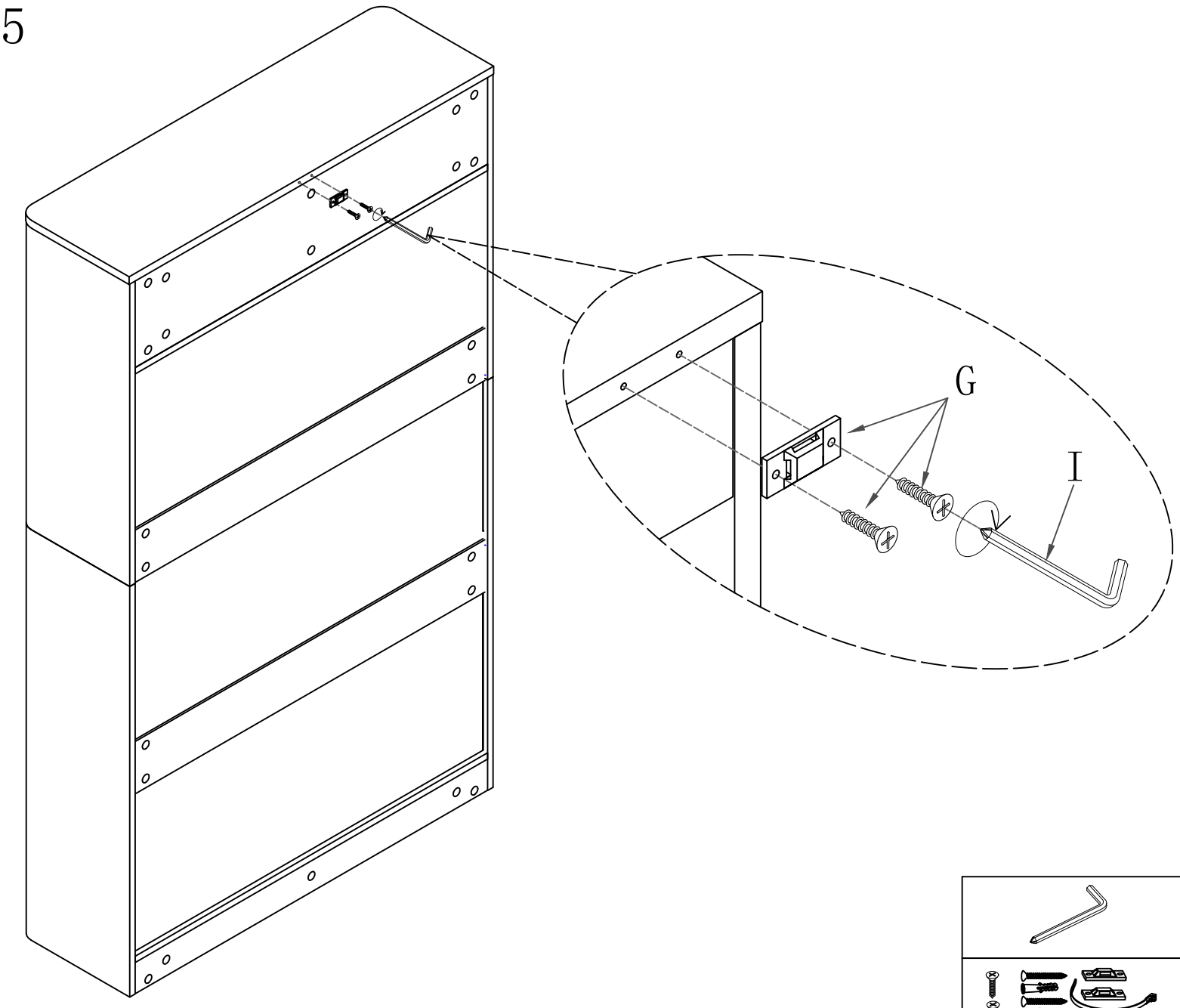

	Ix1pcs
	Gx1sets

Step 26

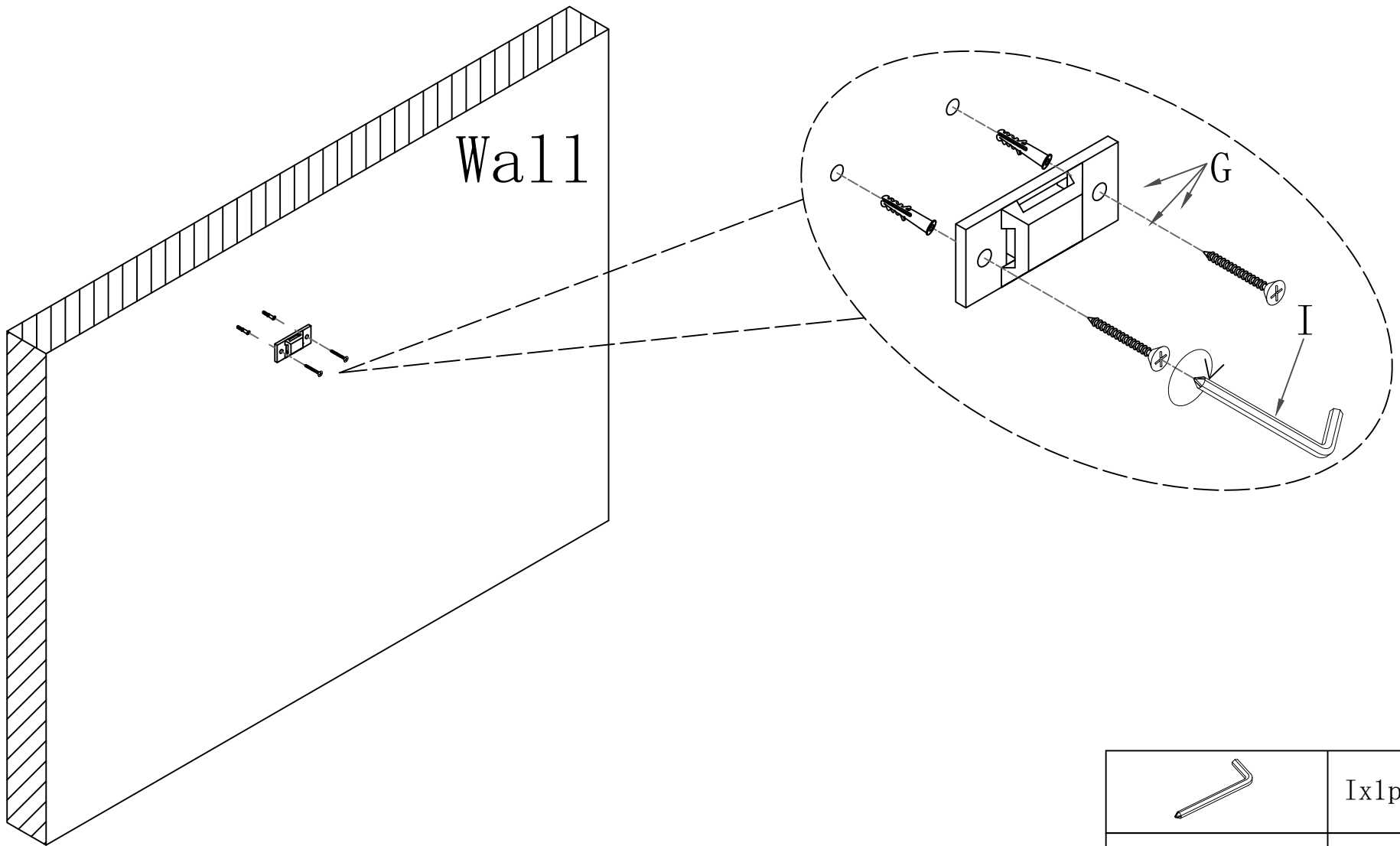

	Ix1pcs
	Gx1sets

Step 27

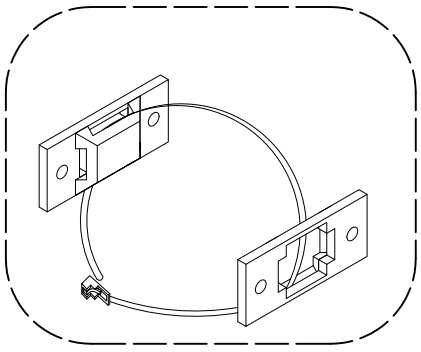

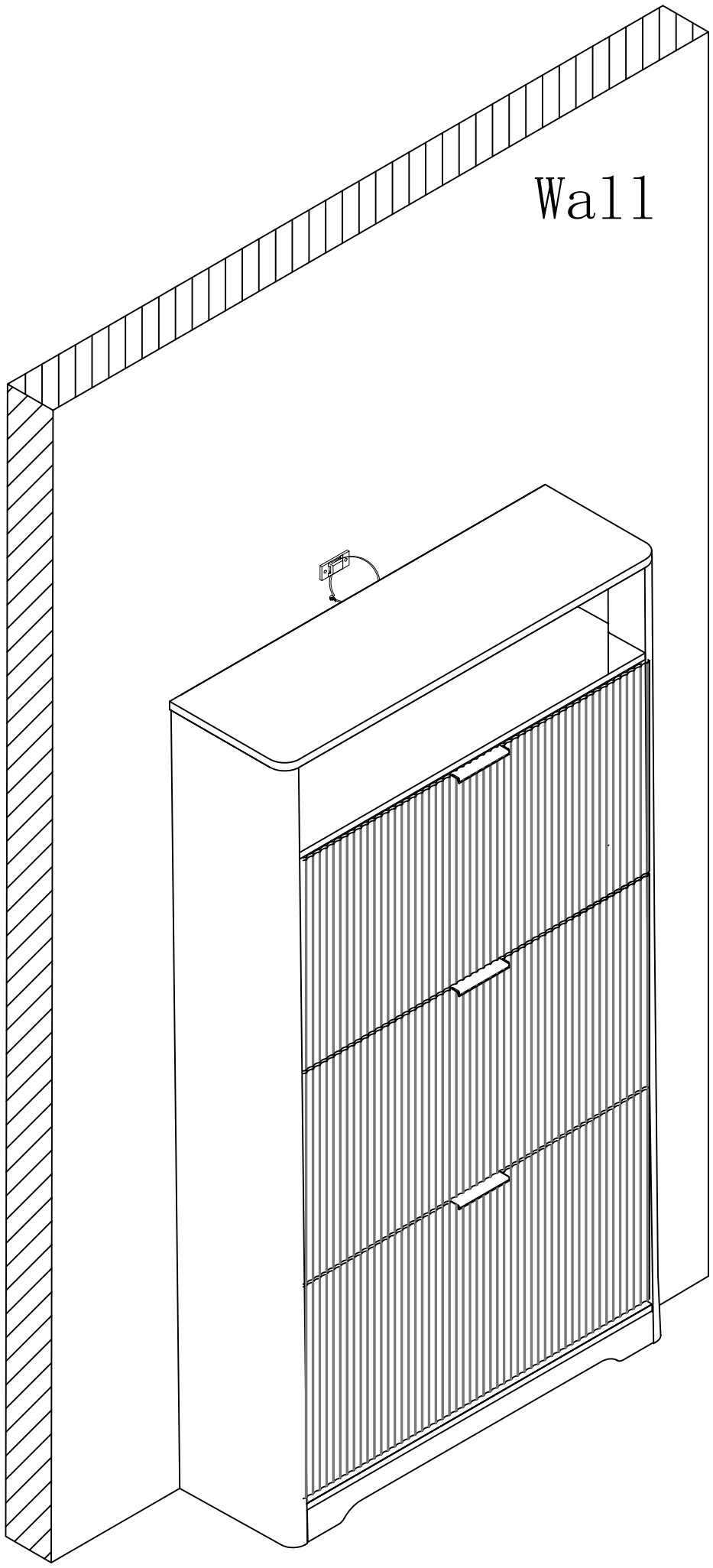

Final