ASSEMBLY INSTRUCTION FOR ITEM CM1001WD

"Why Our Furniture Comes in Smaller, Easy-to-Assemble Packages"

We believe that thoughtful packaging and design are essential to providing quality furniture that's better for the environment and easier on your wallet. That's why our products are shipped in fully knock-down, space-efficient packaging. This approach reduces the carbon footprint of transportation, minimizes packaging waste, and ultimately allows us to pass on significant savings to you. Additionally, our flat-packed designs make it simple to move and assemble your new furniture at home, saving you time and costly delivery fees. With a little consumer effort, you'll enjoy great furniture at a lower cost while making a greener choice for the planet. Take your time, follow the instructions, and enjoy watching your vision come to life—piece by piece."

We believe you will absolutely love your new furniture. Please immediately examine this product carefully. Any request for missing part or damage replacement must be received within 90 days of your receipt of the product. For some reason you want to return the product, please contact us directly before you decide to return your product to the retailer. Our Customer Service organization can answer most concerns and can assist you with any questions you may have about your new product.

Please contact us first by emailing service@casepiece.com

Have these ready when you email:
- **Item Number**
- **PO #**
- **Purchaser Name**
- **Description of the problem and/or the Part Number needed**
- **Proof of Purchase**

Replacements for missing or damaged parts or hardware are normally shipped within 3 to 5 days business and we thank you for your patient.

The item must be returned in good condition, in original box, with all original proof of purchase, parts and accessories, within the time frame specified by the retailer it was purchased from.

90-Day Limited Warranty Statement for Manufacturing Defects

Please read this Limited Warranty carefully. To maintain your Warranty, you will need to comply with the conditions stated here. This warranty is for manufacturing defects only and does not cover damages as a result of misuse.

1. Our products sold comply with the description contained in this Warranty. All parts and products are warranted 90-Day from the original date of delivery except: parts and products used for commercial, contract, rental trade, institutional, or any other non-residential purposes; parts and products that have not been maintained in accordance with the care recommendations provided; parts and products damaged resulting from the consumer's improper assembly; or parts and products that are damaged or defective due to normal wear and tear.

2. To exercise rights under this warranty, proper documentation, i.e., photography, purchase order number, manufacturer's bar code label, and or any other pertinent information upon request is required. We reserve the right to repair or replace the product within the warranty period based upon the documentation received as support of a claim for consideration. We will not replace or repair any product if improper maintenance, improper handling, or improper use caused the damage. Any product sold from or modified by a Non-Authorized Dealer, Seller or Consumer will void the Warranty.

3. Cost of packaging and shipping to and from us is not covered by the warranty unless expressly arranged by us. This warranty does not extend to furniture that has been exchanged or replaced by us as settlement of an original claim of defective merchandise. This warranty does not extend to furniture that has been moved from delivery location on original purchase order.

We appreciate your business!

ASSEMBLY INSTRUCTION

ITEM : CM1001WD

PARTLIST

1	2	3	4	5
TABLE TOP x1	TABLE SIDE x2	TABLE TOP SUPPORT RAIL x1	TABLE SIDE SUPPORT RAIL x2	CENTER SUPPORT METAL x1

HARDWARE

A	B	C	D	E
JCBC SCREW M6 x 15MM x4	JCBC SCREW M6 x 35MM x4	JCBC SCREW M6 x 45MM x6	PANHEAD SCREW M4.5 x 38MM x2	SPRING WASHER M6 x 12MM x10

F	G
FLAT WASHER M6 x 19MM x10	L - KEY M4 x 65MM x1

Please contact **service@casepiece.com** for assistance

ASSEMBLY INSTRUCTION

NOTE :- The outer board is for protection of packaging only, not part of furniture. Please throw it before assembly.

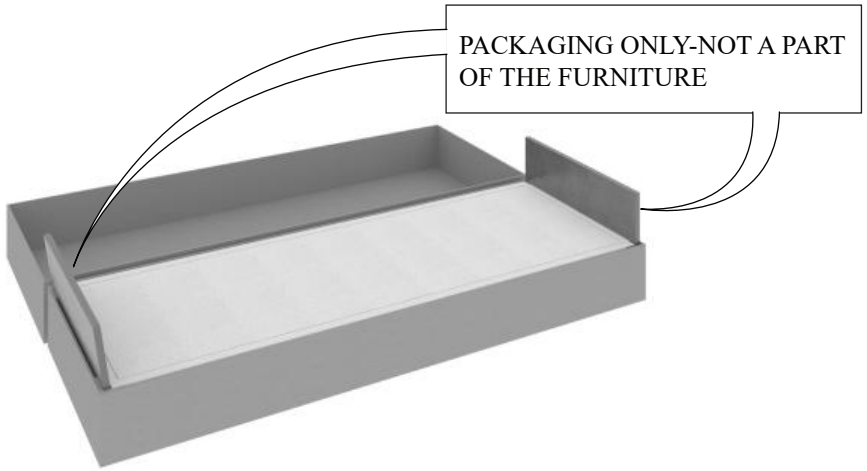

STEP 1

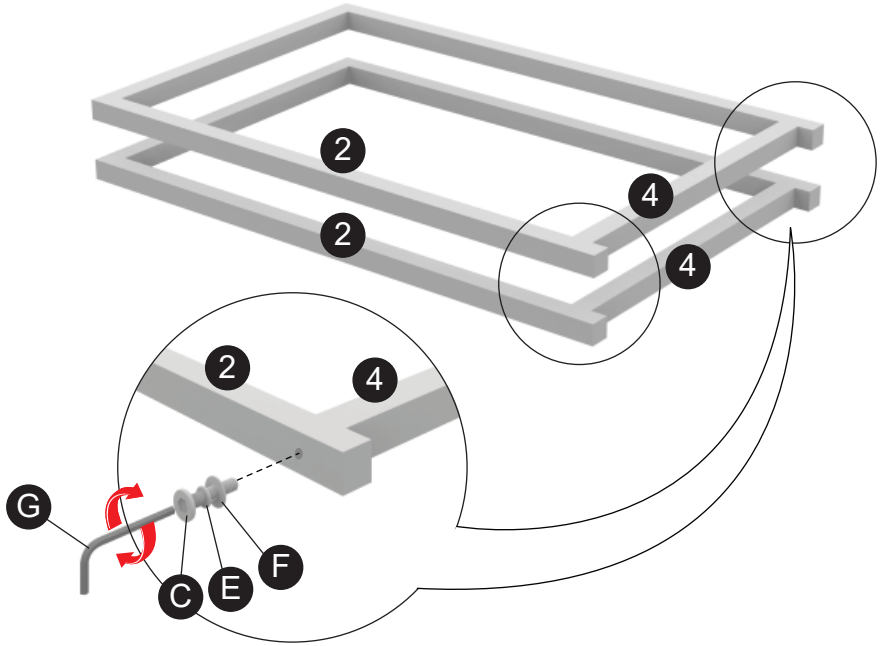

STEP 2
BACK VIEW

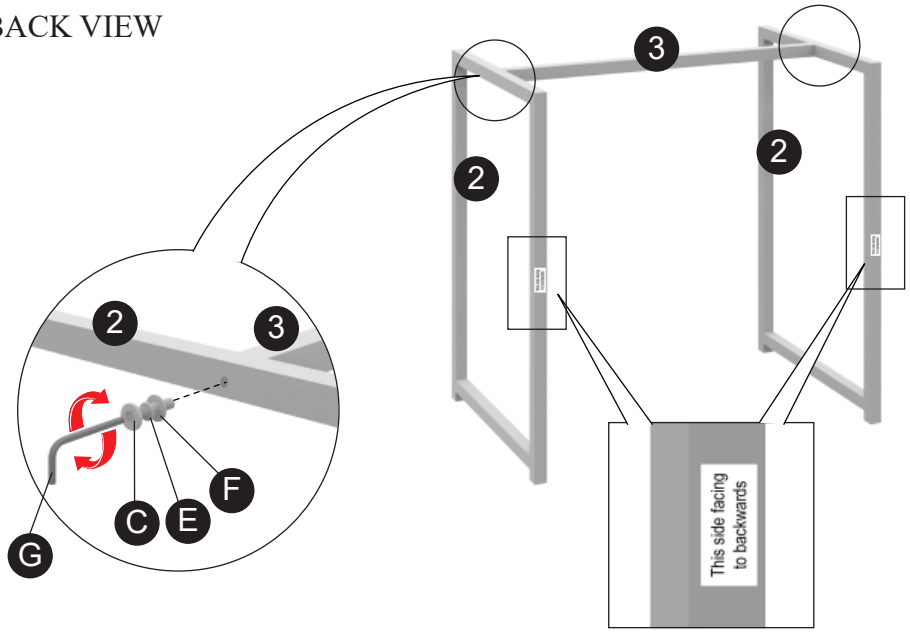

STEP 3

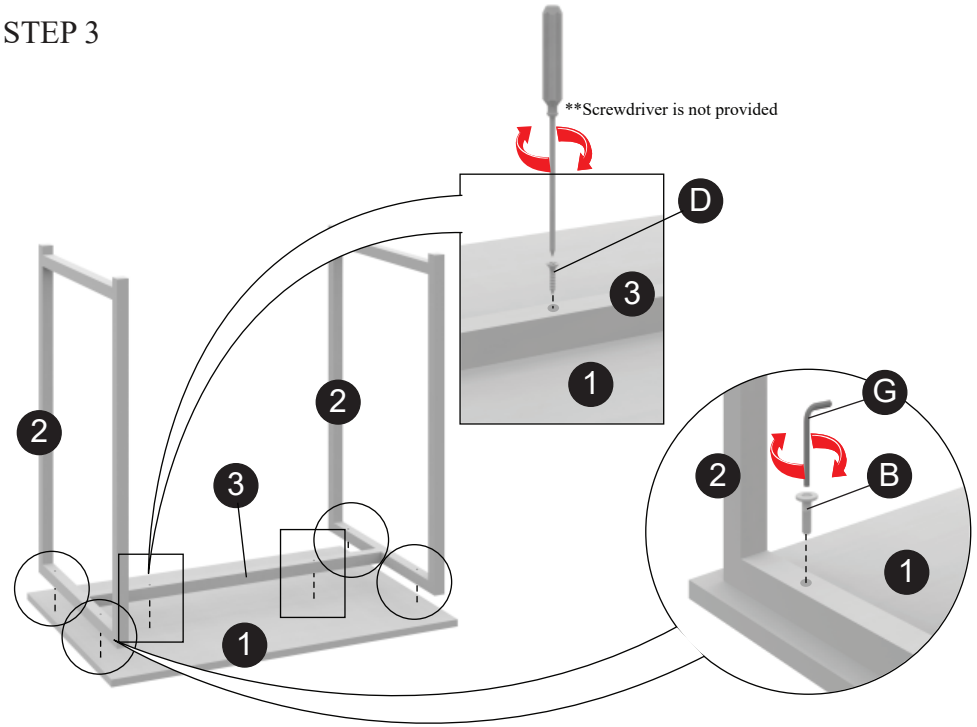

ASSEMBLY INSTRUCTION

STEP 4
BACK VIEW

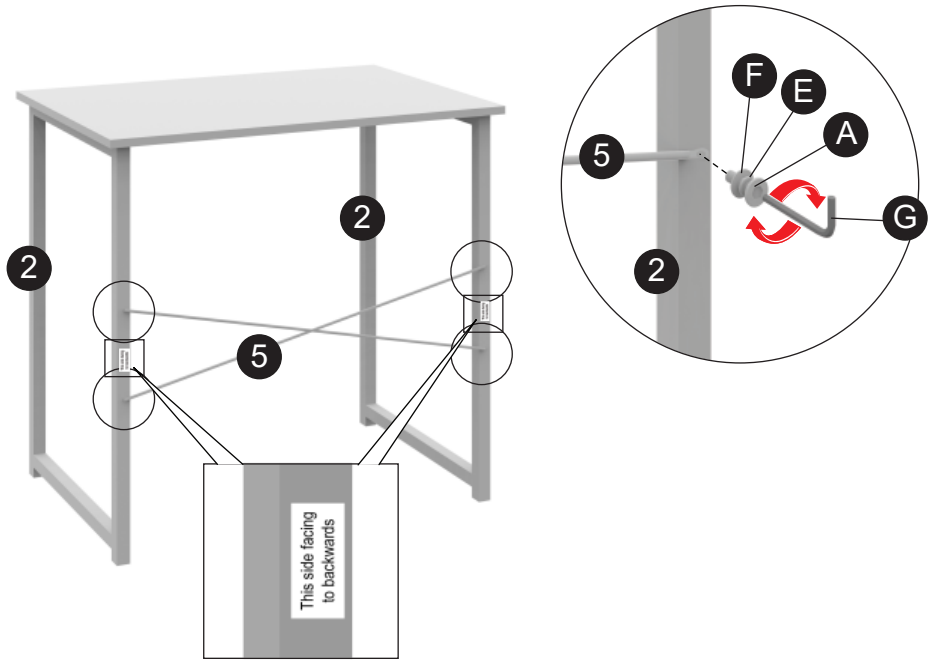

STEP 5

ASSEMBLY
COMPLETED