## Warning

- Not suitable for children under 36 months to use this product.
- Assembled by an adult, do not get near fire!
- Caregiver must not leave while product is in use!
- This product is not a means of transportation and should not be used on public transportation roads!
- Charge this vehicle at least once a month when not in use for a long time!
- For the safety of use guardian must read the instructions before use!
- This package contains important information, please keep it in a safe place!

# CHILDREN'S BATTERY ATV

**INSTALLATION INSTRUCTIONS**

If you have any question, please contact at L843485741@outlook.com directly.

# PARTS

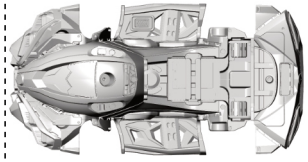

① BODY ② HOOD ③ SEAT

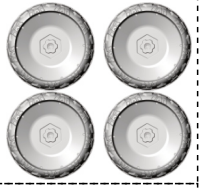

④ SEATBACK ⑤ BUMPER ⑥ WHEELS

⑦ FRONT HANDBAR ⑧ WHEEL PARTS ⑨ HAND BAR

⑩ HANDBAR COVER ⑪ WHEEL COVER ⑫ L & R SEAT BRACKET

# PARTS

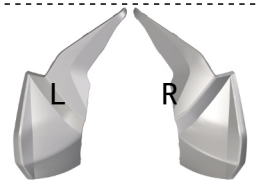

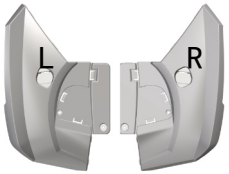

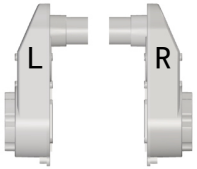


⑬ FRONT WHEEL FENDER ⑭ REAR WHEEL FENDER ⑮ L & R MOTOR

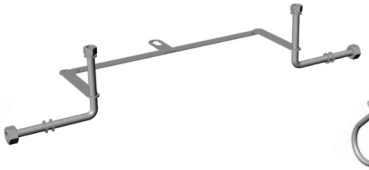

⑯ REAR ALEX ⑰ FRONT WHEEL STEERING RACK ⑱ STEERING ALEX

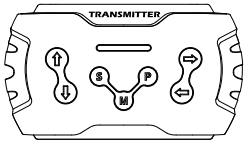

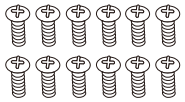
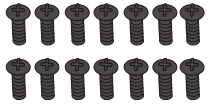

2.4G R/C WHITE SCREWS BLACK SCREWS

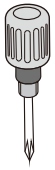
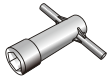
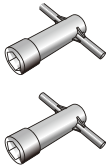
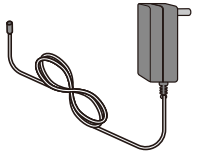

SCREW DRIVER WRENCHES CHARGER

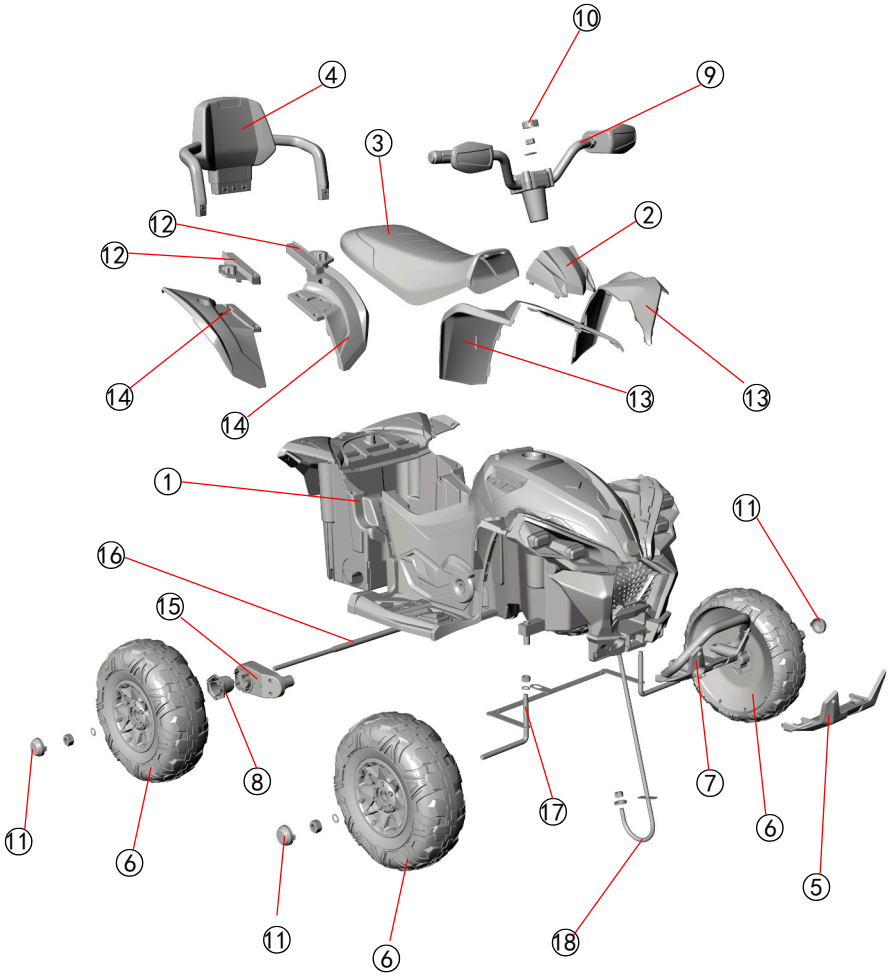


# Installation steps

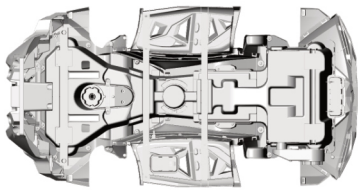

Remove the screws from the rear alex.

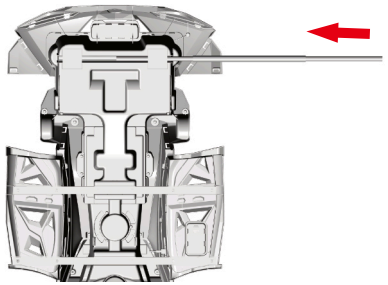

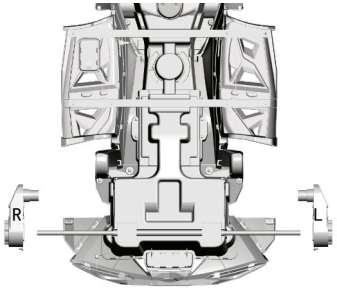


**STEP 1:**

Open the body seats, take out spare part & steering rack.

Rear axle in the bottom of the body, turn the body over, remove the screws from the rear alex.

Using rear axle aligned with the car body into the left and right motors aligned with the rear axle, then tight the screws.

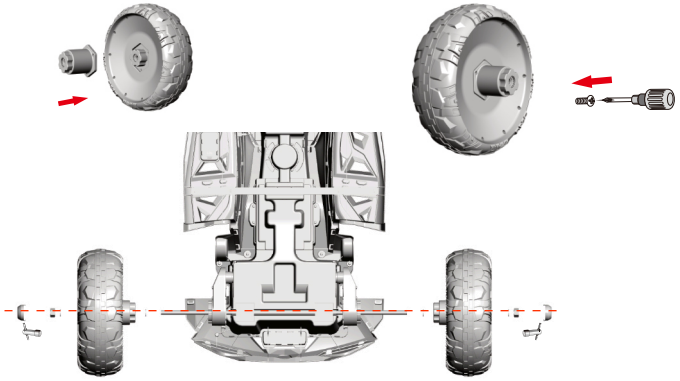

**STEP 2:**

Install the wheel parts for 4 wheels, white screws tightened.

Rear wheel cross over the rear alex, then install by spacer,nut, use the wheel cover after the nut tightened.

# Installation steps

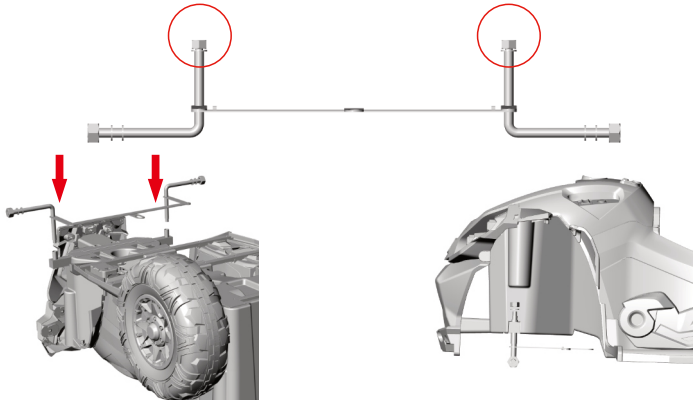

**STEP 3:**

The steering rack aim at the hole and install, put the spacer and nut,the tighten.

Same cooperation for left & right side.

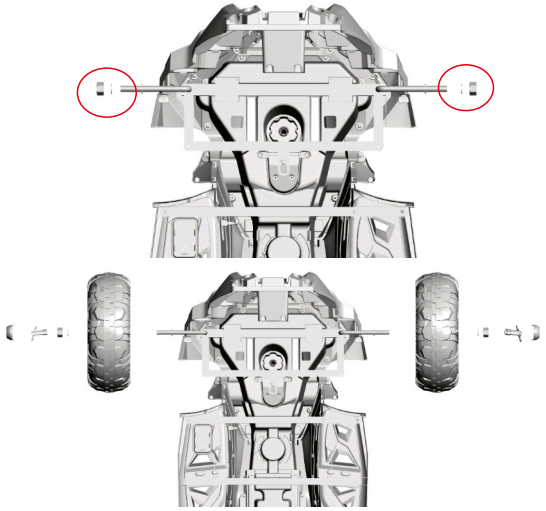

**STEP 4:**

Remove the spacer & nut from the steering rack.

Thread the wheel and spacer into the steering rack,then tighten the nut by wrench, then install the wheel cover.

# Installation steps

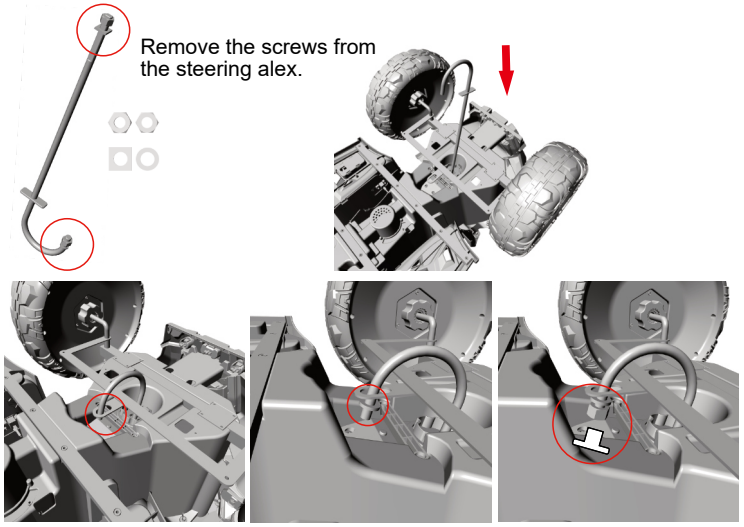


**STEP 5:**

Remove the nut and spacer from the steering alex,

Using the steering alex thread upward the rear of the body, steering alex hook the hole of front wheel steering rack. Then tighten the spacer & nut by wrench.

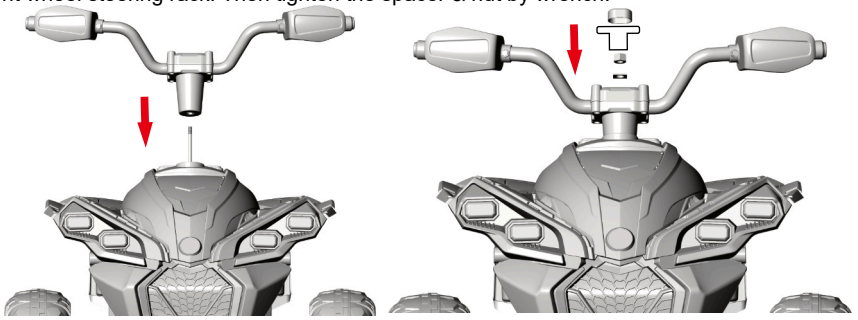

**STEP 6:**

Take the handlebar to the body downward cover, square gasket install with the handlebar through, tighten the nut by wrench, then install the handlebar cover.

# Installation steps

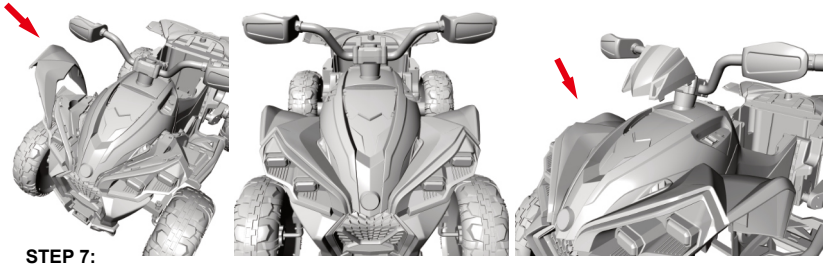

**STEP 7:**

The front fender point at the hole then install and tighten. Same operation for left and right side.

Using the hood point at the hold of the front face, then intall & tighten.

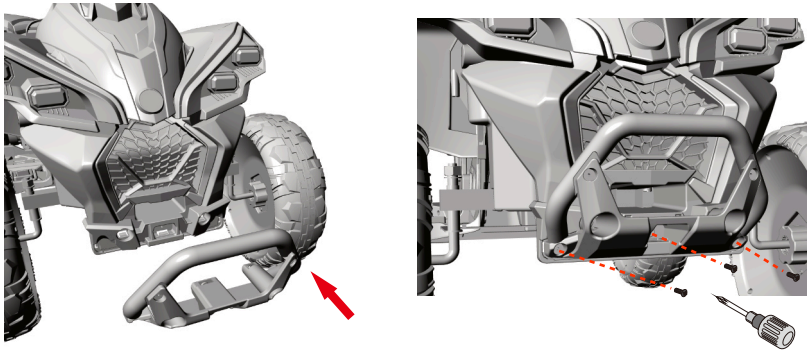

**STEP 8:**

Using front handbar point at the hole,then use the black screws tighten.

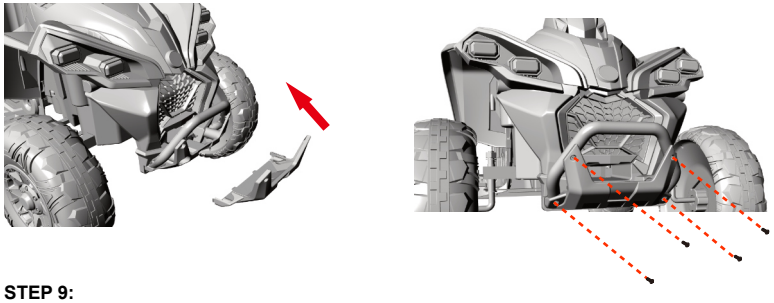

**STEP 9:**

Using bumper parts point at the hole,then use the black screws tighten.

# Installation steps

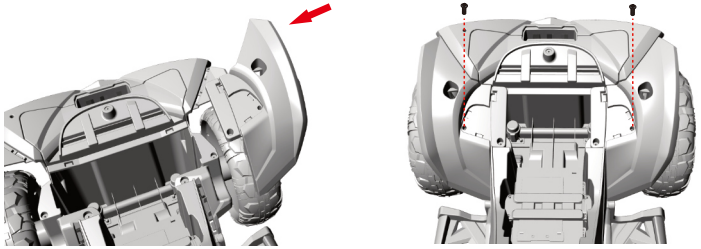

**STEP 10:**

Using rear wheel fender point at the hole,then use the black screws tighten.

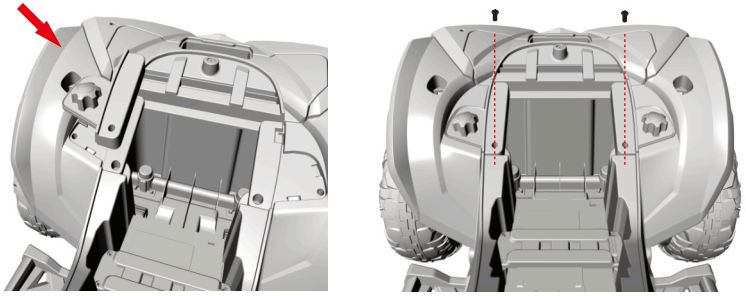

**STEP 11:**

Intalling seat bracket point at the hole,then use the black screws tighten.

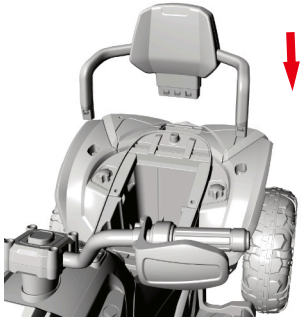

**STEP 12:**

Intalling seatback point at the hole,then intall and tighten.

## Installation steps

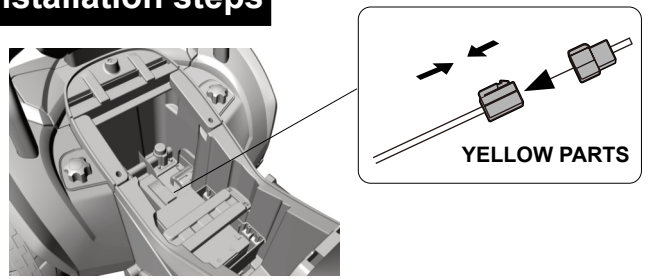


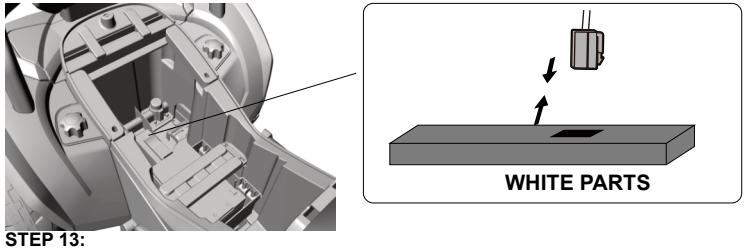


**STEP 13:**

Connect the left & right driving motor wire(Yellow part),then insert into the control box.
(WHITE PARTS AS PIC SHOWN.)

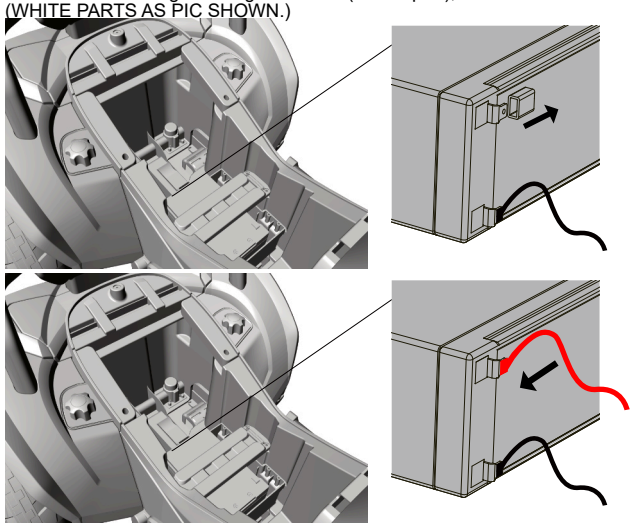

**STEP 14:**

Remove the white insulating cap and connect the red wire.

## Installation steps

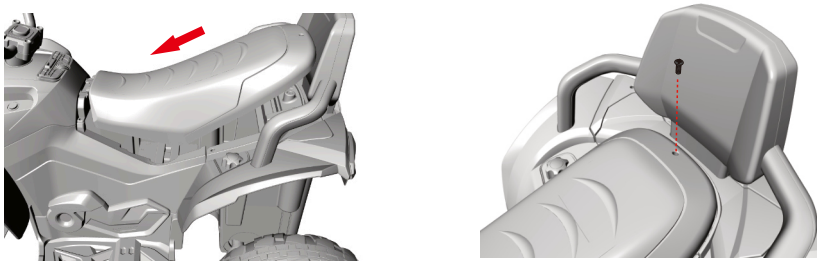

**STEP 15:**

Intall the seat, and using the black screws tighten.

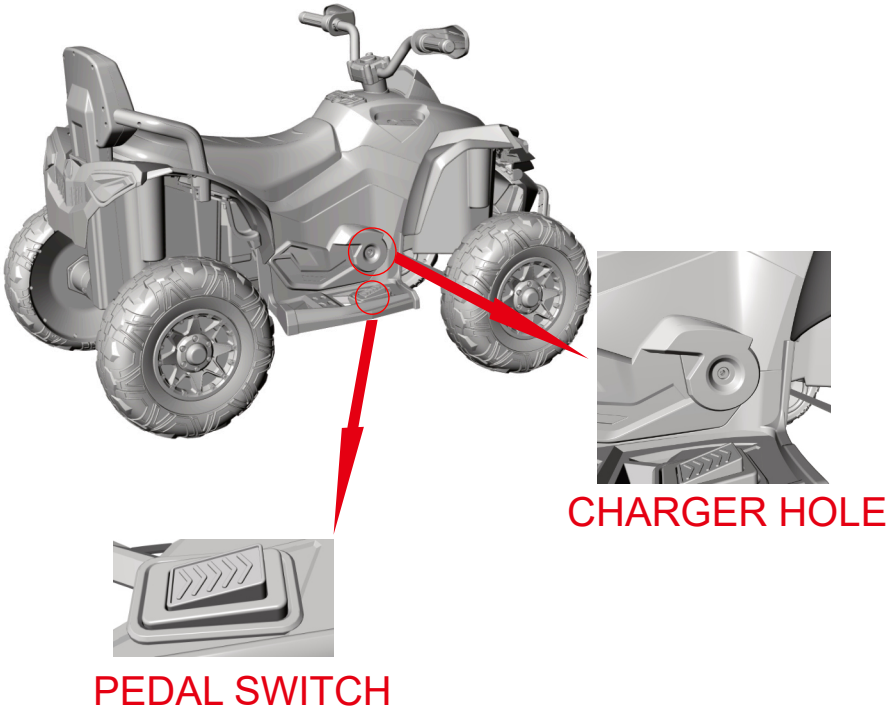

## REMOTE CONTROL FUNCTIONS AND INSTRUCTIONS

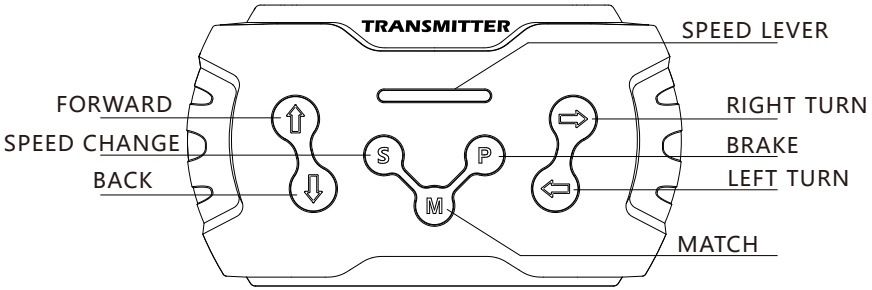


**The first time you use it, you need to set the code, this product has a built-in memory, you don't need to set the code after replacing the batteries.**

1. Turn off the power, press and hold the "M" button of the remote control, the first indicator light will start flashing after 3 seconds, then release the button.
2. At this time, turn on the power switch of the car body, the first indicator light of the remote control will be always on, the code is successful.
3. the remote control will enter the sleep state after 10 seconds when it is not in use, press any key to wake it up
4. key description: "△" forward, "▽" back, "◁" left turn, "▷" right turn, "S" speed, "P" brake, "M" to the code

Press "S" key to set the speed, one light is on for low speed, two lights are on for medium speed, three lights are on for high speed, only medium speed when reversing.

Press the "P" key to enter the brake state, the indicator lights all flash, press the "P" key again to exit the brake state.

## ⚠ *WARNINGS*

**Not suitable for children under 36 months, there are small parts inside, choking hazards**

- Insert two AAA/7 (1.5V) dry batteries as shown in the picture.
- Remove the batteries from the product when they run out.
- Use non-rechargeable batteries and do not recharge them.
- The positive and negative terminals of the power supply should not be short-circuited.
- Do not mix different types of batteries or old and new batteries.
- The package of this product contains important information that must be retained.
- Batteries must be loaded with positive and negative terminals as indicated in the diagram.

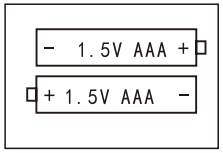


## MUSIC BOARD FUNCTION DETAIL

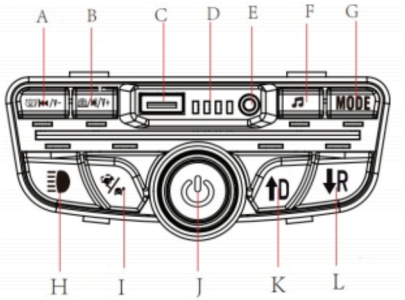


A- ENGLISH STORY / PREVIOUS SONG / VOLUME DOWN

B- NEXT STORY / NEXT SONG / VOLUME UP

C- USB SOCKET

D- POWER DISPLAY

E- AUX SOCKET

F- MUSIC

G- MODE SWITCH

H- LIGHT CONTROL

I- HIGH / LOW SPEED

J- POWER ON / OFF, MUSIC PAUSE

K- FORWARD

L- BACKWARD

## FAULT TYPE

| PROBLEMS | METHOD |
|---|---|
| CAR NO ANY ACTION | 1. Whether the switch of each function of the electric vehicle is open or not<br>2. Is the fuse tripped<br>3. Whether the battery protection cable is disconnected or not<br>4. Whether the DC plug of the charger is plugged into the charging cradle or not |
| CAR MOVE SLOWLY | 1.Whether the battery power is sufficient<br>2.Whether the electric car is overloaded |
| CAN NOT CHARGER | Is the charger or battery bad |

## SPECIFICATION

| PROGRAM | DETAIL |
|---|---|
| ITEM NO.: | |
| PRODUCT SIZE: | 121*72*76 CM |
| BATTERY: | 12 / 24V |
| DRIVING MOTOR: | 12V / 24V |
| AGE: | 3+ |
| MAX LOAD: | ONE PERSON / 30KG |
| USING TIME: | 45-80 MINS |
| CHARGER: | 12V / 24V |

## MAINTENANCE

- In order to ensure that your baby is protected from accidental injury, please check and maintain this vehicle frequently.
- Before assembling, please check whether the boxed components are complete, if there is any lack, please contact us quickly.
- Regularly check whether there are loose screws and damaged parts.
- Please check regularly whether the parts are intact when they are installed or used.
- Please clean the product regularly and be careful not to damage the electrical components.
- When disassembling, please read the instruction manual carefully to avoid unnecessary damage.
- Please check the product and the charger regularly to see if the wire, plug, shell and other parts are damaged and stop using it until it is repaired.

## WARNINGS

- This machine is powered by high quality lead-acid batteries, please feel free to use it, do not drop and touch it, do not disassemble or puncture it by yourself; do not expose this product to fire, high temperature or water: if you find that the body has bulging and other undesirable phenomena, please stop using this machine.
- The assembly and adjustment of the product must be carried out by an adult, keep children away from moving parts.
- Warning! Not suitable for children under 36 months! Small parts Including.
- Children must be instructed by an adult to use the product and the caregiver must not leave during use, do not go near fire!
- Battery charging must be done by an adult, please charge the battery before using the product.
- To avoid harm to children, keep packaging materials such as plastic bags away from children! There is a danger of chamber breathing!
- Prohibit the use of any accessories not supplied by the manufacturer
- All batteries should be loaded with the correct polarity.
- Do not let children use the charger as a toy!

## WARNINGS

- The maximum weight of this vehicle is 30KG, not overloaded
- Toys can not be connected to more than the recommended number of power supply
- Non-rechargeable batteries cannot be charged
- Power terminals must not be short-circuited
- Rechargeable batteries should only be charged under adult supervision
- Do not mix different types of batteries or old and new batteries.

## Charging Precautions!

- When using the EV for the first time, you must ensure that the battery is fully charged for 12 hours, otherwise the battery will be permanently damaged and beyond repair.
- When charging, first insert the charger DC plug into the charging socket, then plug the charger into the power outlet. The toy (whole vehicle) must not be operated while the vehicle is charging.
- Each use 1-2 hours must be charged in time, normal charging time 8-12 hours, not more than 12 hours.
- It is normal for the charger and the battery to be hot (below 60°C) during the charging process.
- If there is water in the connector, it can not be charged, otherwise it may cause short circuit.
- This electric vehicle must use the charger and battery equipped with this vehicle to avoid damage to the charger and battery or the circuit.

## Precautions for use!

- Before use, please check whether the parts are installed in place and connected tightly.
- Do not use on streets, public transportation roads, slopes, gutters and other dangerous areas.
- Do not use on smooth floors (e.g. marble, tiles, etc.).
- Be careful not to allow children to stand on the seat.
- Do not modify the wiring of this vehicle and attach electrically charged devices.
- The charger and electric vehicle must not be allowed to get wet or used under water. Keep away from sources of ignition as far as possible to avoid damage to the electric circuit.
- The electric car stops running when it touches an obstacle, please move away from the obstacle before moving forward.
- When not in use, please turn off the power switch; when not used for a long time, please unplug the battery connector. Prohibit charging indoors

## WARNINGS

1. This product uses high-quality lead-acid batteries, please rest assured that the use, do not drop and touch, do not disassemble or puncture; Do not expose this product to fire, high temperature or water: If you find that the body of the body has a bulging and other undesirable phenomena, please stop using this machine.
2. This product is not intended for use by persons (including children) with reduced physical, sensory or mental abilities unless they are supervised and instructed in its use by a person responsible for their personal safety.
3. Children should be supervised to ensure that they use the product properly.