glitzhome®

ASSEMBLY INSTRUCTION

Glitzhome Corporation (Shanghai), Ltd.
Toll free 888-357-7263
customerservice@glitzhome.com

A

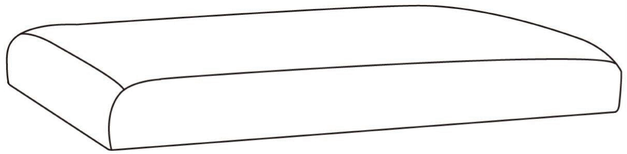

B

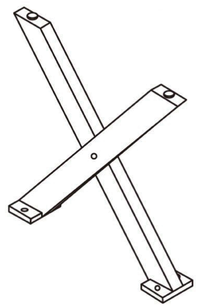

C

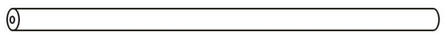

HARDWARE LIST

CODE	DES	QTY.
D	FLAT WASHER	10
E	SPRING WASHER	8
F	M6 X 13MM	8
G	M6 X 60MM	2
H	ALLEN KEY	1

WARNING!!!

1. Lay out all the parts and hardware and identify each part as shown may help you as you assemble the bench.
2. Do not completely tighten any bolts (M4) until the unit is fully assembled and sitting on a level surface.
3. Do not over tighten any bolt nuts as this may cause stripping.

Get social with us and discover more about our products, tips and exclusive discounts!

glitzhome®

ASSEMBLY INSTRUCTION

1. Assemble the cross legs (B) and round bar (C) with the long screws(G). Insert long screw (G) to cross legs (B) and tighten with allen key (H).
2. Insert the short screw(M4) with washer (D & E) to bench top (A).

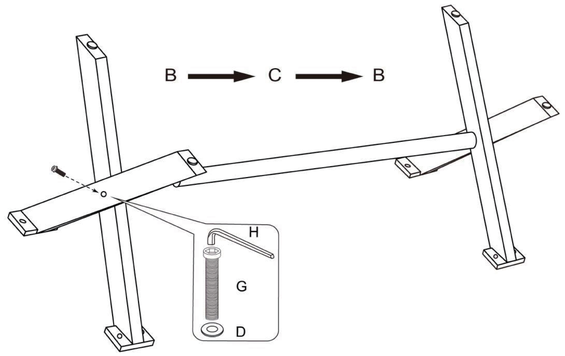

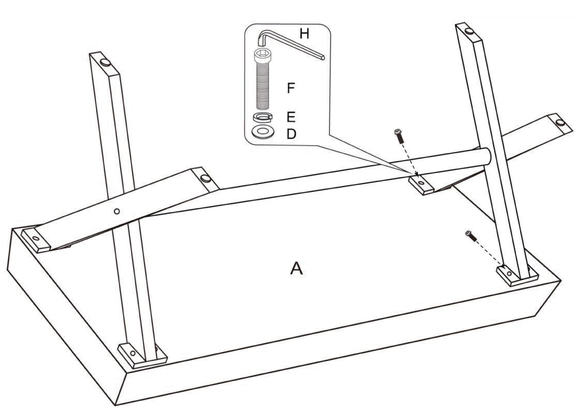

4.Turn the bench over and place on the floor to test bench for stability before use.

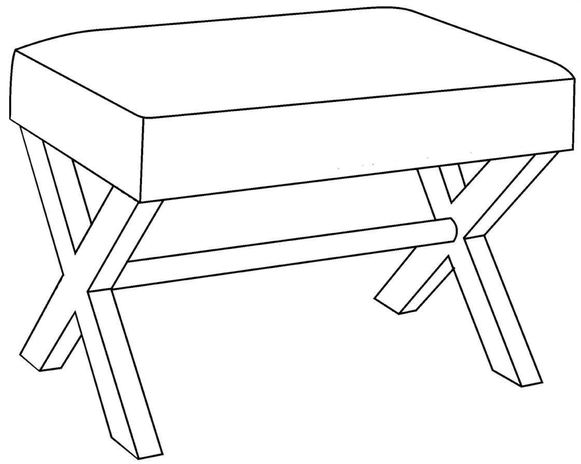

Get social with us and discover more about our products, tips and exclusive discounts!