Assembly Instruction
BED129

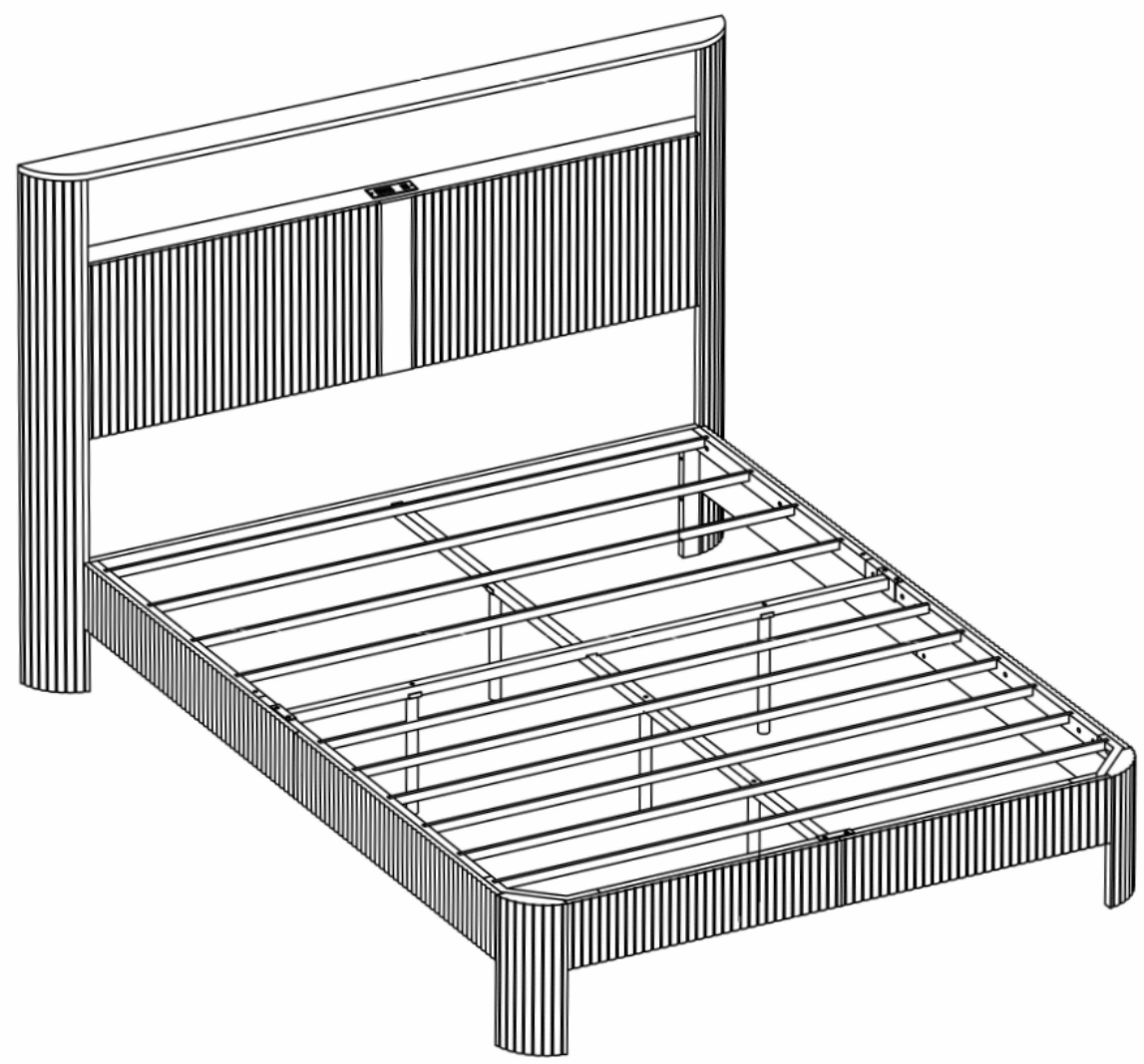

EN

General Guidelines

- Please read the following instruction carefully and use the product accordingly.
- Please keep this manual and hand it over when you transfer the product.
- This summary may not include every detail of all variations and considered steps. Please contact us when further information and help are needed.

Notes

- The product is intended for indoor use only. The product must be assembled and used in accordance with the provisions of the manual. Personal injury and/or damage to product may occur if products are used outside of their intended purposes and/or if products have been changed/modified from their original design. The seller does not assume any responsibility or liability with respect to any injury/damage caused by incorrect assembly or improper use.
- Avoid long-term exposure to humid environments to prevent mildew.
- Keep the product away from fire sources and high temperatures. Do not expose the product to direct sunlight.
- Do not place any hot objects on the surface of the product.
- If there are any defective or missing parts after unpacking, please cease assembly immediately and contact us.
- Please assemble the item on a spacious surface and do not place the unwrapped product directly on the ground to avoid product damage.
- Please do not stand or sit on the wooden boards.
- Please wear gloves during the assembly and/or disassembly process to avoid scratches from any sharp edges.
- Please match the corresponding part and fitting based on the part number in the manual.
- If the part does not match with the fitting, please check the piece as specified in this manual.
- During assembly, first loosely align all screws with the corresponding pre-drilled holes and then tighten the screws one by one.
- Periodically inspect screw tightness while the product is in use. If necessary, retighten to ensure structural integrity.
- If you accidentally spill water or another liquid on the surface, immediately wipe clean with a dry towel.
- Please keep the product away from sharp, pointed objects and corrosive substances to prevent product damage.
- Please place this item on level, solid ground during use.

Warnings

- During assembly, keep all small parts out of the reach of children. It may be fatal if swallowed or inhaled.
- Children should not climb or play on the product in order to avoid tipping over the furniture and causing serious injury.
- To avoid the potential dangers of suffocation, please keep all parts and packaging (film, plastic bags, foam, etc.) away from babies and children.
- Keep sharp objects and corrosive items away from the product to avoid any damage or injury.

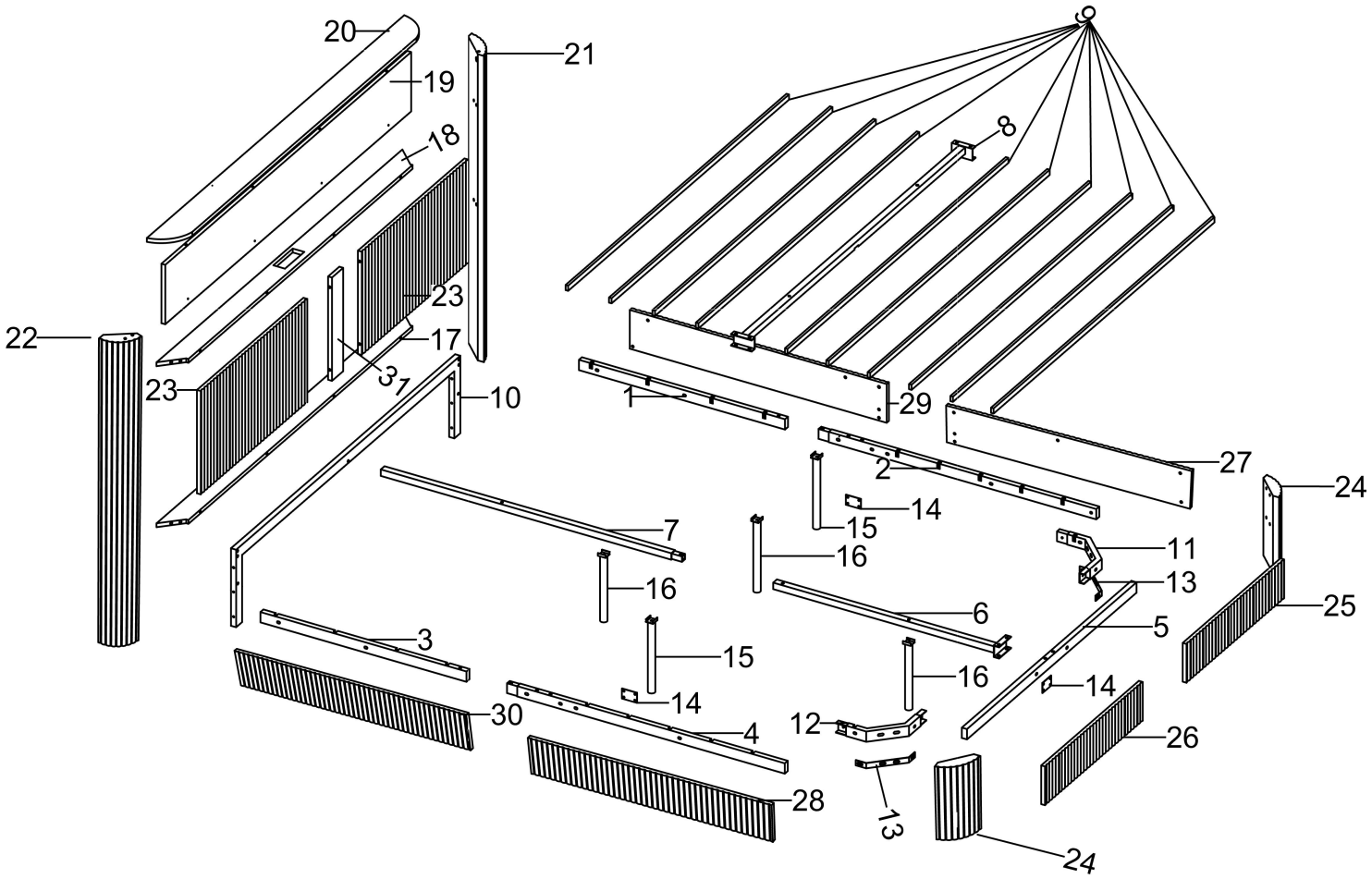
20
21
19
18
8
23
22
17
31
23
10
1
29
27
2
24
14
15
7
16
11
13
16
6
25
5
3
15
16
14
14
30
4
12
26
28
13
24

Parts List(EN)

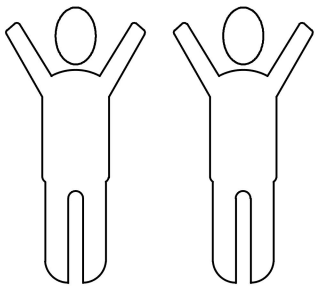
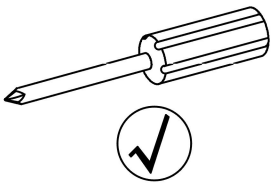
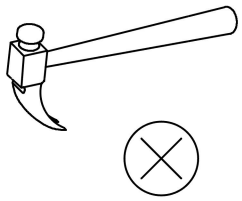
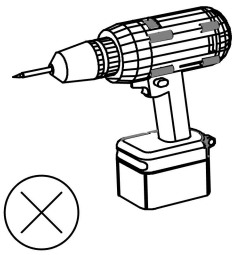

① 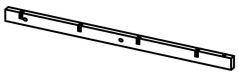 1PCS	②  1PCS	③ 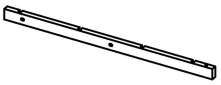 1PCS	④ 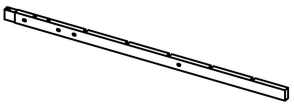 1PCS
⑤ 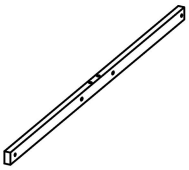 1PCS	⑥  1PCS	⑦  1 PCS	⑧ 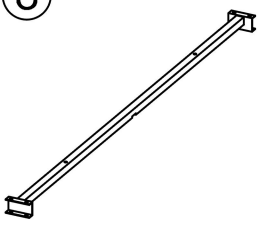 1PCS
⑨ 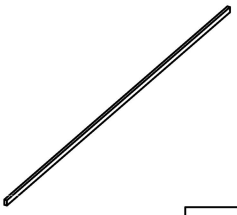 10 PCS	⑩ 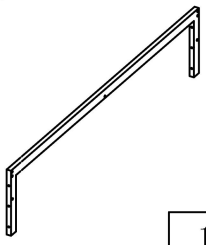 1PCS	⑪ 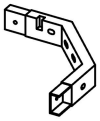 1PCS	⑫ 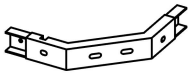 1PCS
⑬  2 PCS	⑭  3 PCS	⑮ 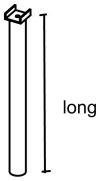 2PCS	⑯ 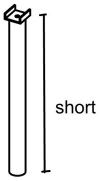 3 PCS
⑰ 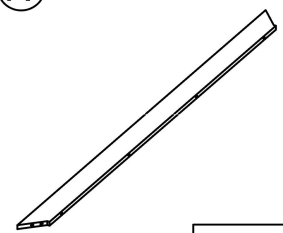 1PCS	⑱ 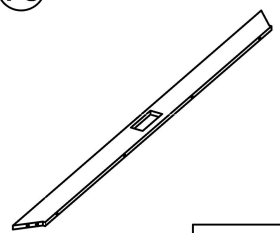 1PCS	⑲ 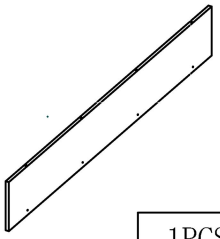 1PCS	⑳ 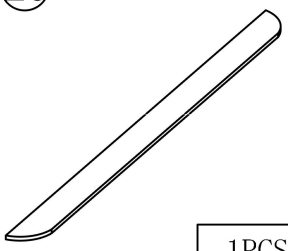 1PCS

Parts List(EN)

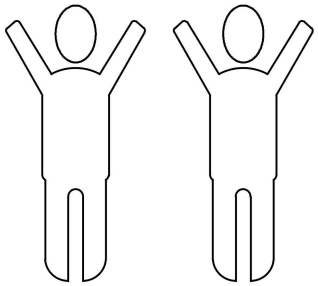
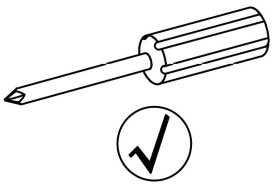
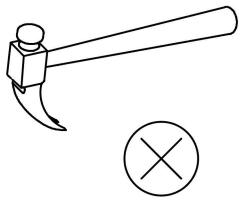
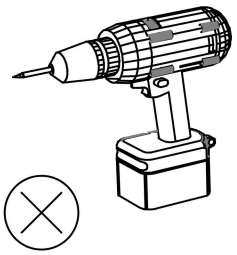

21  1PCS	22  1PCS	23 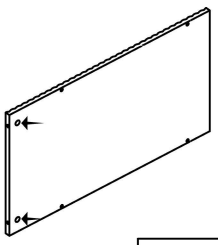 2 PCS	24 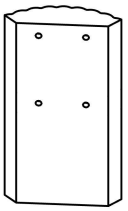 2 PCS
25 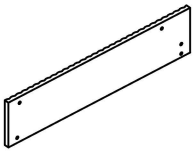 1PCS	26 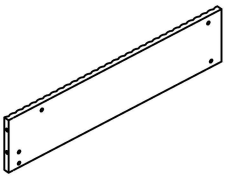 1PCS	27 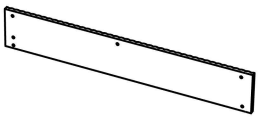 1PCS	28 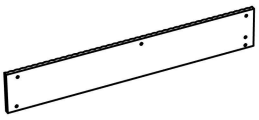 1 PCS
29 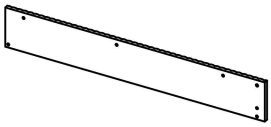 1PCS	30 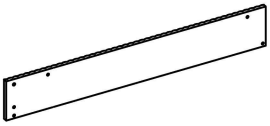 1PCS	31  PCS	

Parts List(EN)

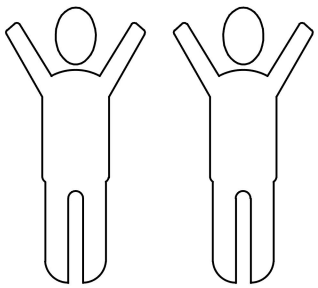
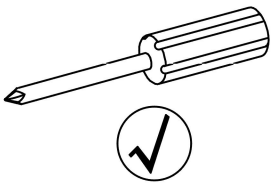
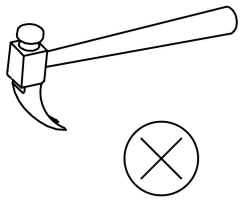
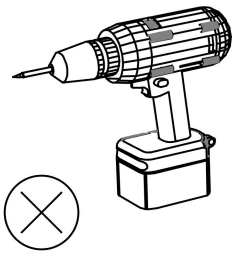

A 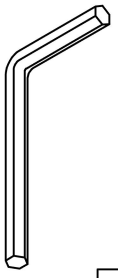 M4 2 PCS	B 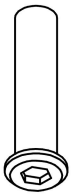 8+1 PCS	C 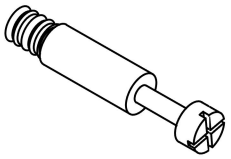 ϕ6*36mm 26+2PCS	D 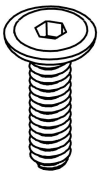 M6*28 30+2 PCS
E 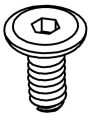 M6*10 28+2PCS	H 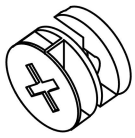 26+2 PCS	G 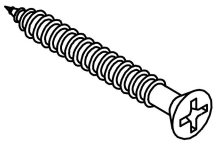 4*55 6+1PCS	Q 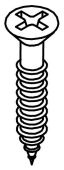 4*30 4+1 PCS
I 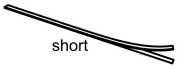 1PCS	X 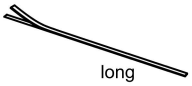 1PCS	N 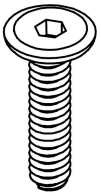 M8*50 5+1 PCS	K 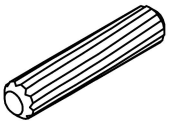 ϕ8*30 6+2 PCS
S  1 PCS	L 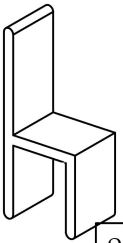 2+1PCS	V  2+1 PCS	P 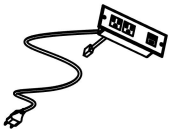 1 PCS
Y  M3.5*14 2 PCS	R 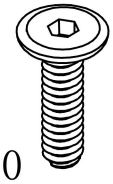 M6*30 5+1 PCS		

Instructions For Fastening
CAM-BOLT and CAM-LOCK

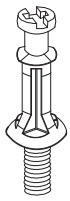

CAM-BOLT



CAM-LOCK

Tools Required

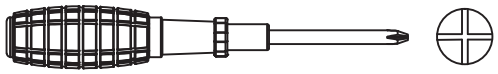

INSERTING AND TIGHTENING CAM-BOLT

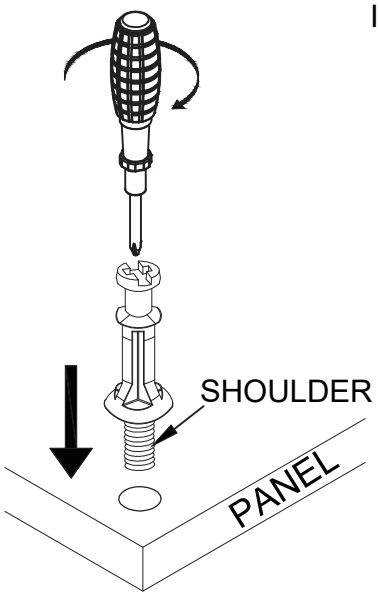

Place Cam-bolt on pre-drilled hole and screw in vertically

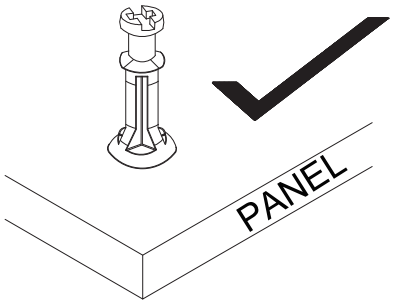

Shoulder is flushed (on the same level) with the panel.

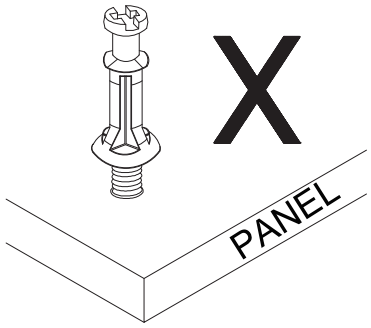

Shoulder is above the panel.

Place Cam-bolt on the designated pre-drilled holes on the panel. Use a Phillips Screwdriver to screw-in Cam-bolt vertically until shoulder is flushed (on the same level) with panel.

INSERTING CAM-LOCK

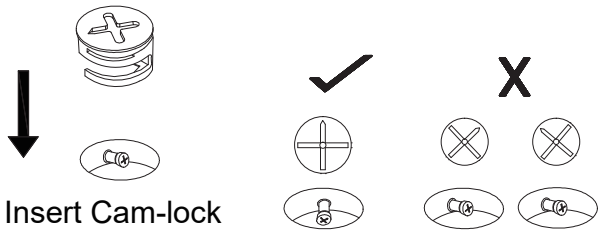

Insert Cam-lock with arrow align to Cam-bolt head

CORRECT

WRONG

Align the arrow on the Cam-lock to the Cam-bolt head and insert the Cam-lock. Ensure Cam-lock is fully inserted.

TIGHTENING CAM-LOCK

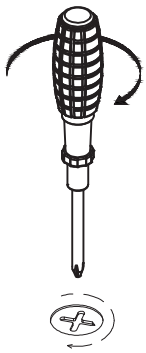

Use a Flat-head Screwdriver to turn Camlock clockwise so it locks onto the head of the Cam-bolt. Turn until it is snug (about 3/4ths of a turn) -- over-tightening could damage Cam-lock or/and Cam-bolt.

STEP1

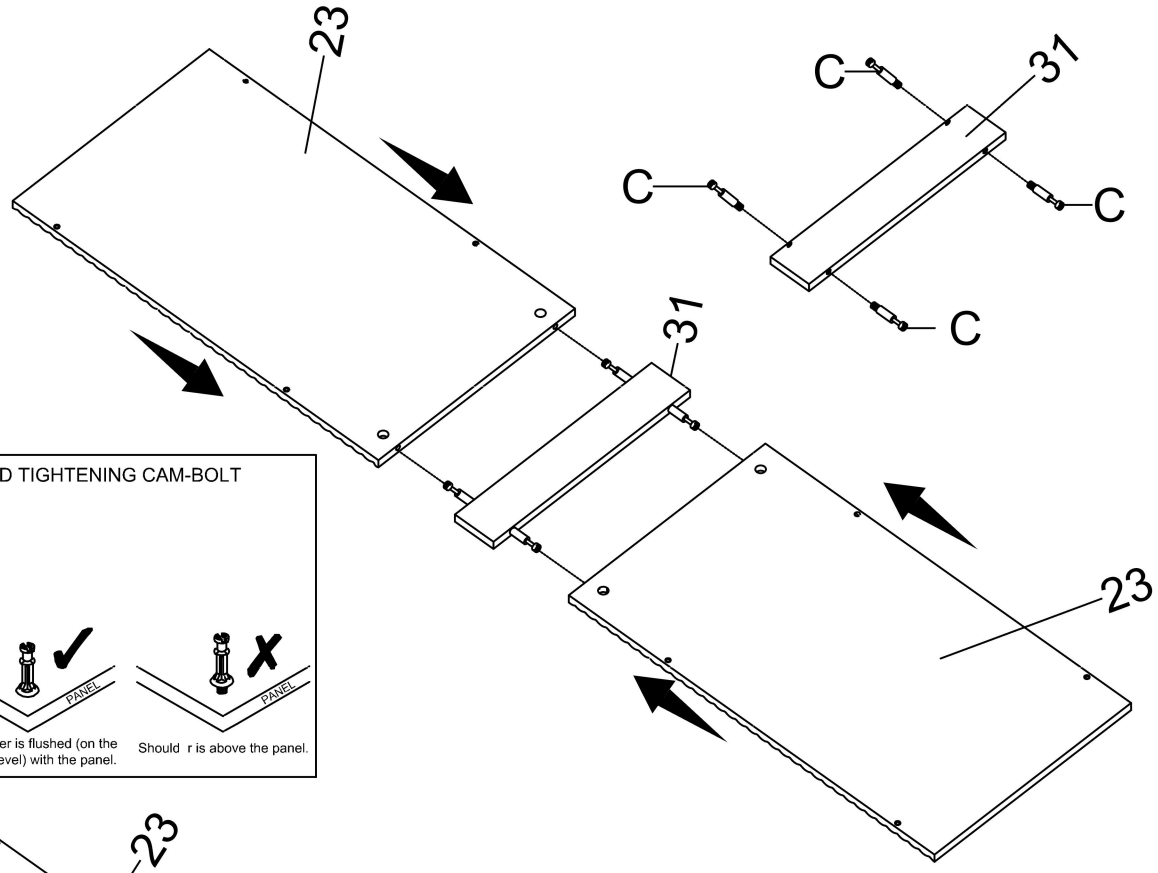

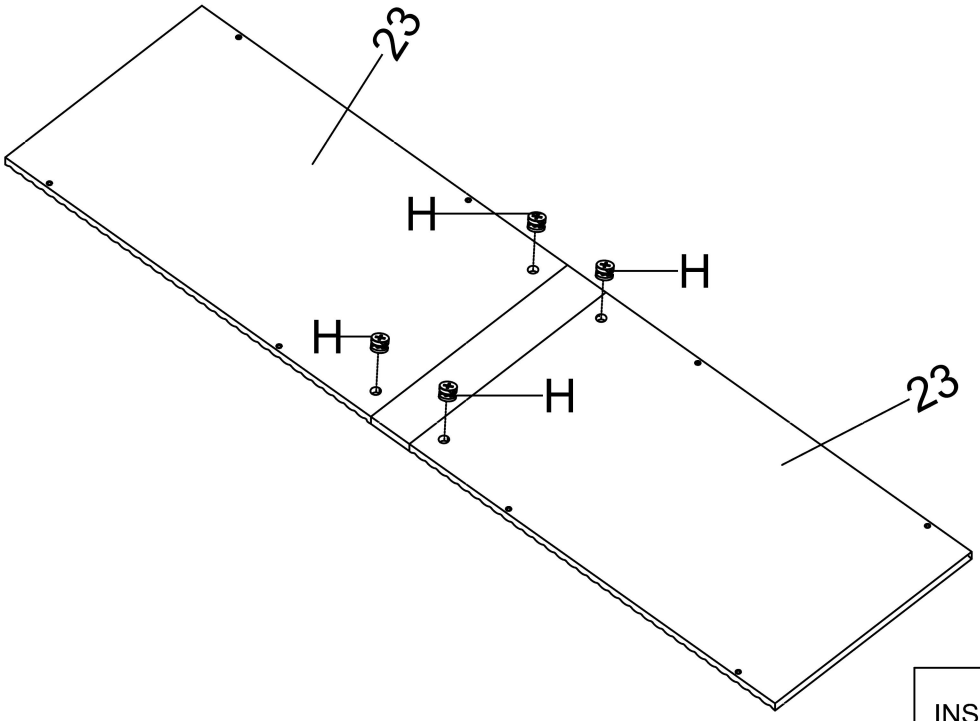

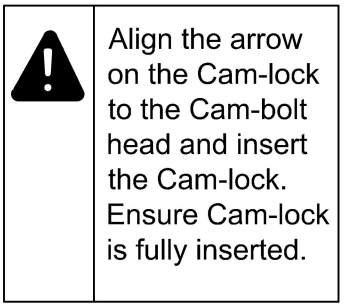

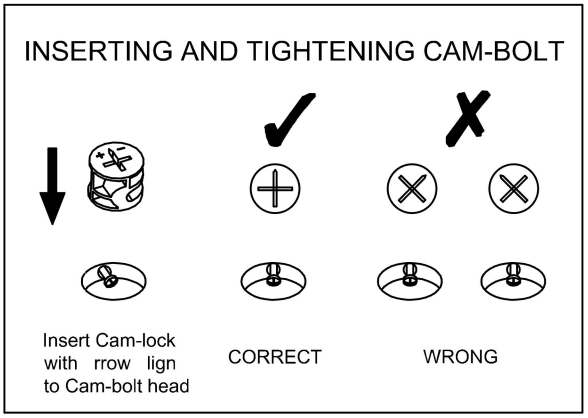

Please Assemble on a Carpet
or Clean, Flat Surface to Prevent Scratches

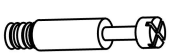	Cx4pcs
	Hx4pcs

STEP2

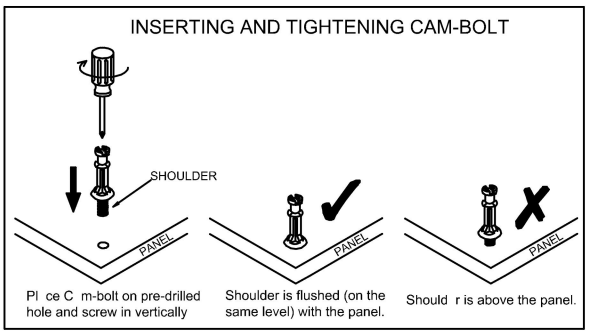

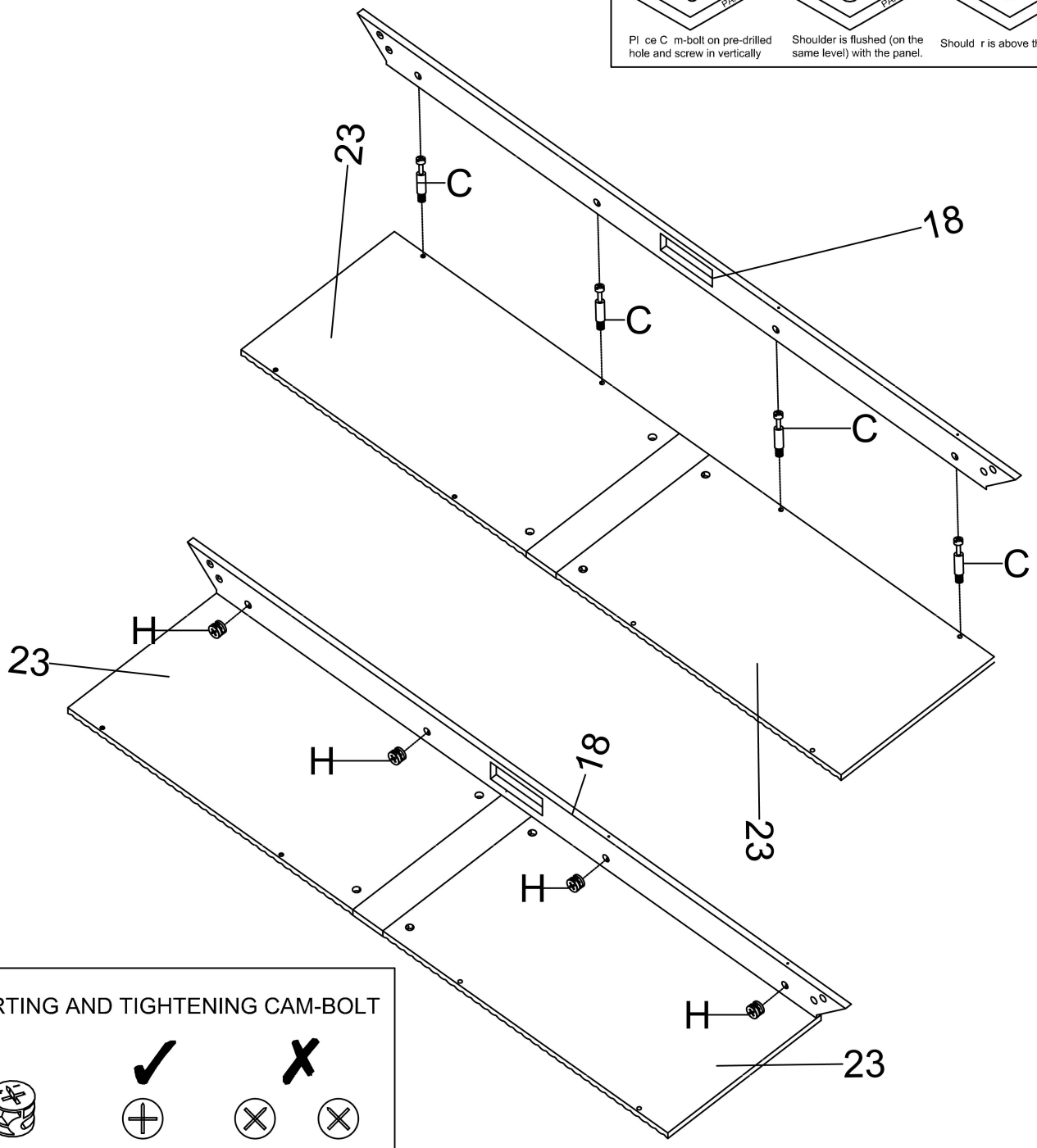

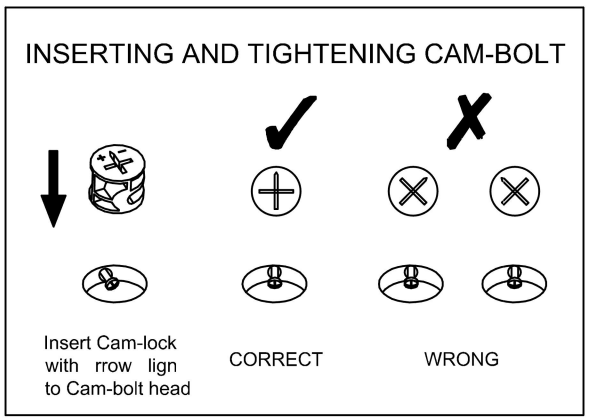

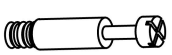	Cx4pcs
	Hx4pcs

Please Assemble on a Carpet
or Clean, Flat Surface to Prevent Scratches

STEP3

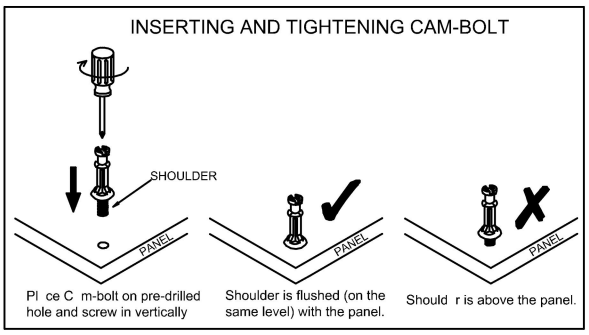

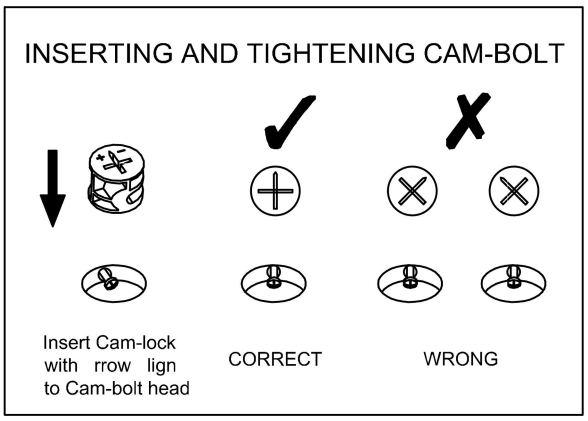

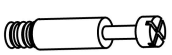	Cx4pcs
	Hx4pcs

Please Assemble on a Carpet
or Clean, Flat Surface to Prevent Scratches

STEP4

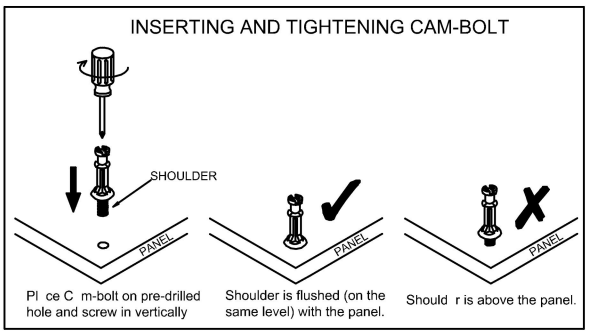

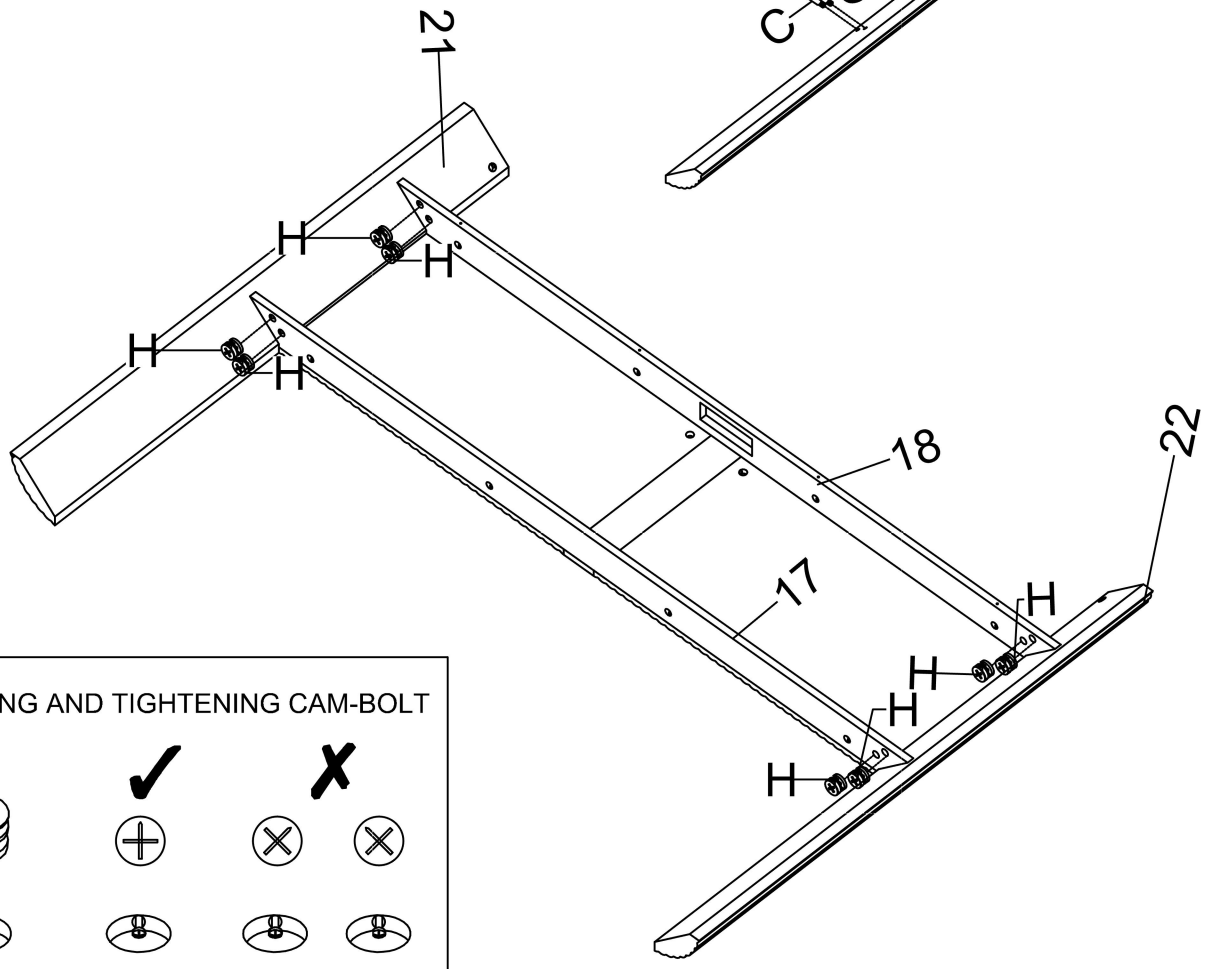

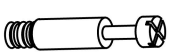	Cx8pcs
	Hx8pcs

Please Assemble on a Carpet
or Clean, Flat Surface to Prevent Scratches

STEP5

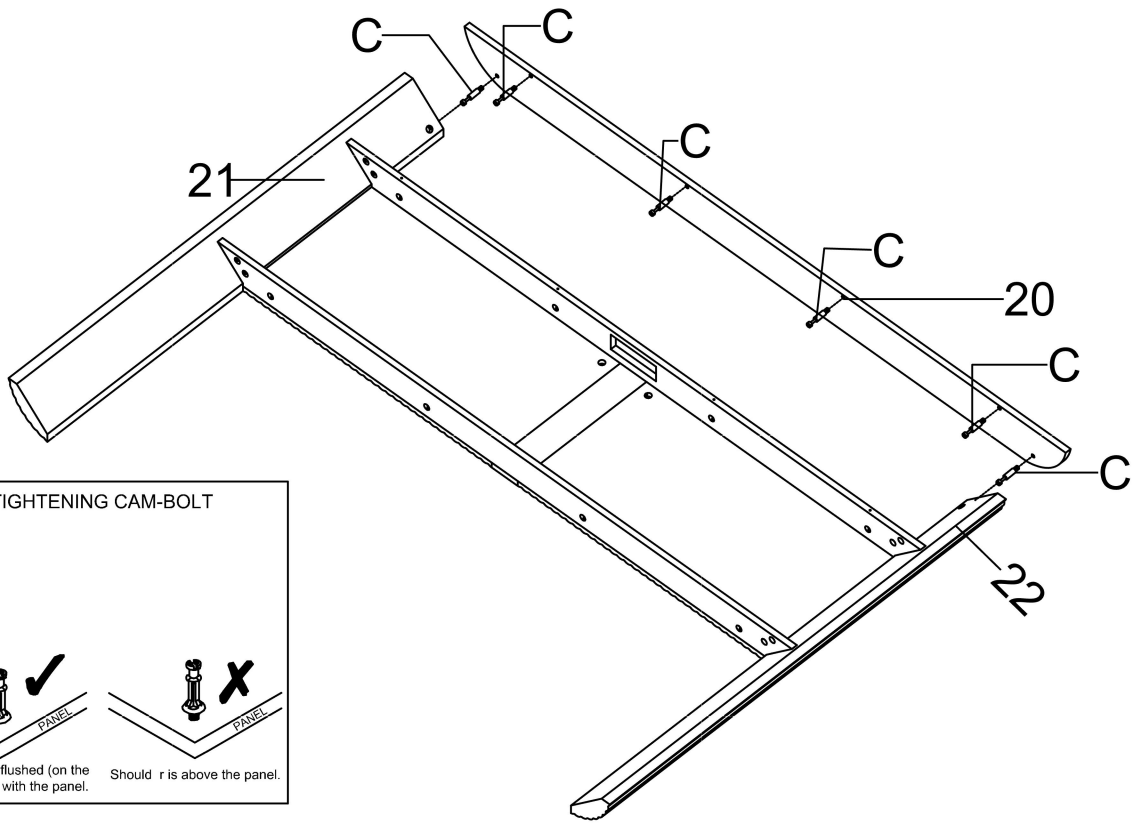

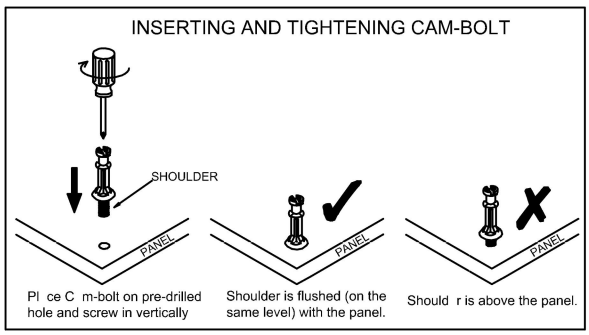

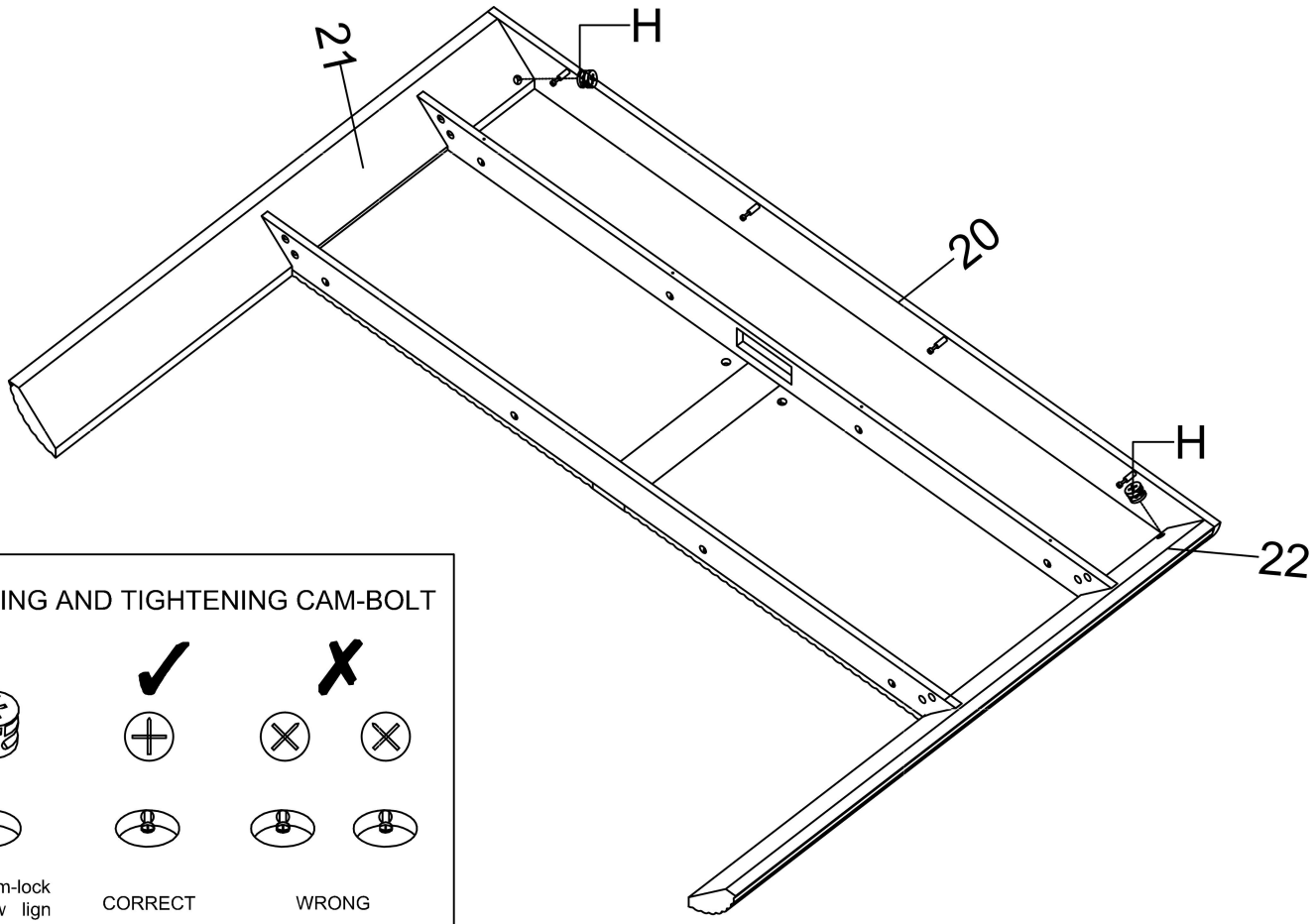

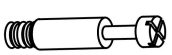	Cx6pcs
	Hx2pcs

Please Assemble on a Carpet
or Clean, Flat Surface to Prevent Scratches

STEP6

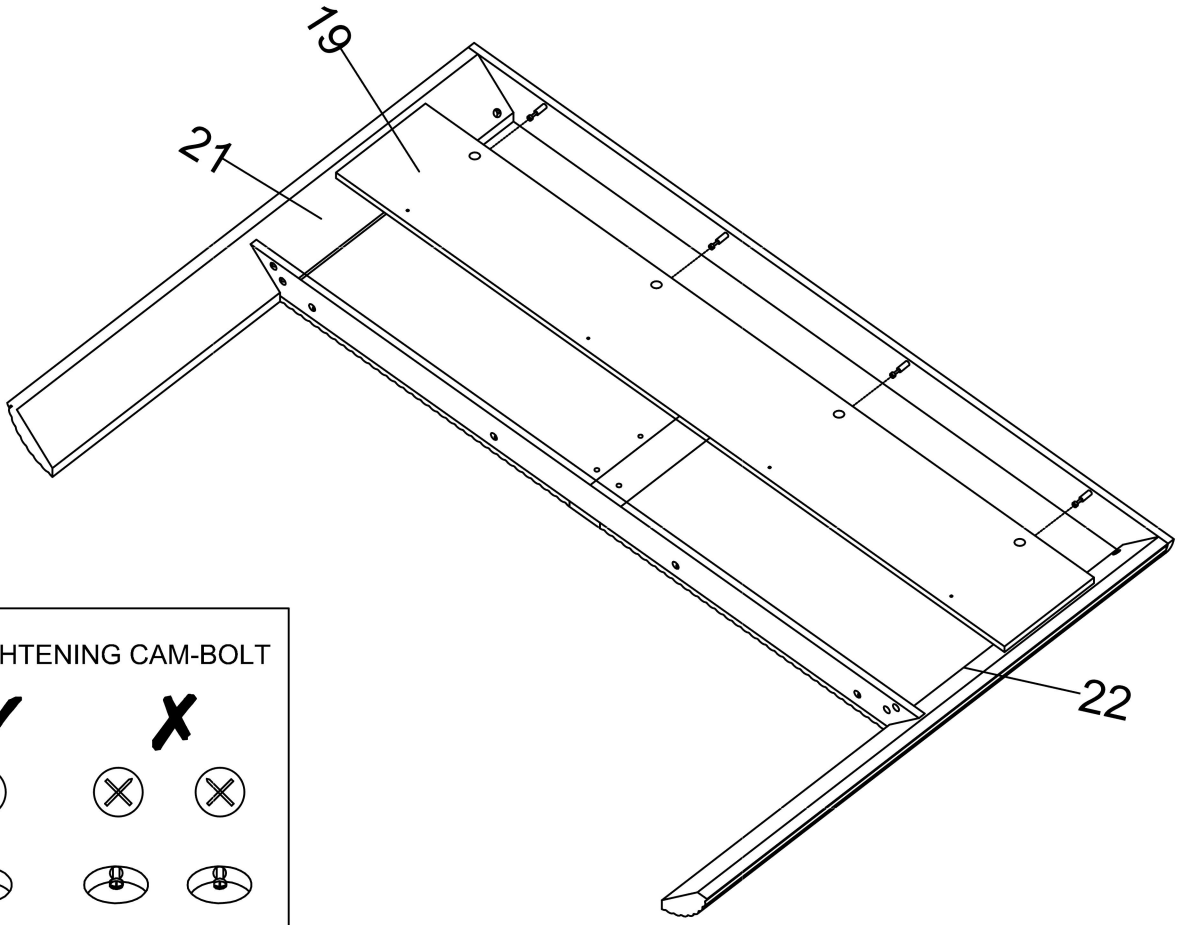

INSERTING AND TIGHTENING CAM-BOLT

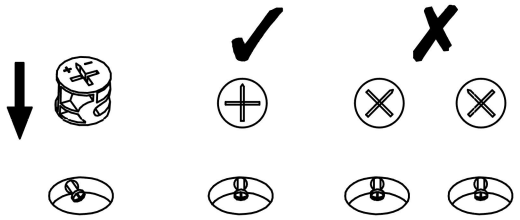

Insert Cam-lock with rrow lign to Cam-bolt head

CORRECT

WRONG

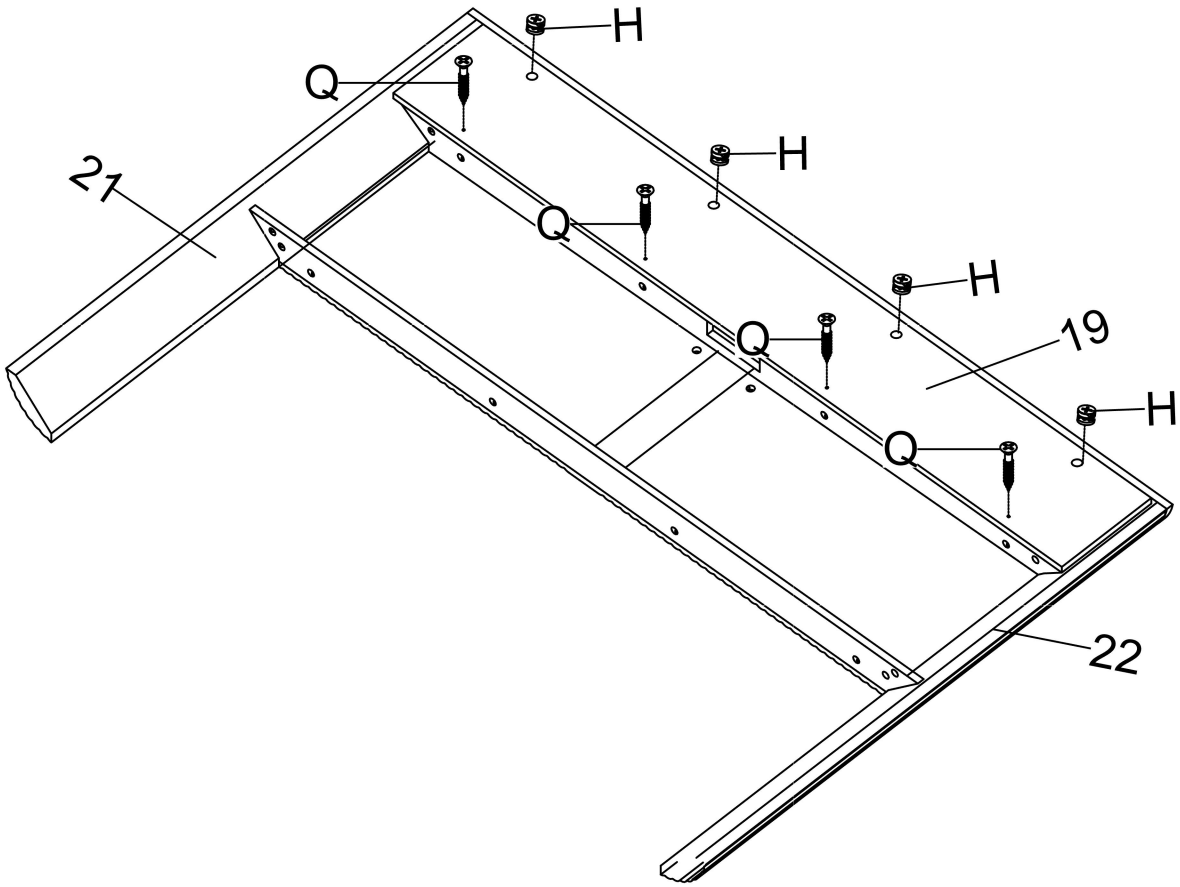

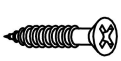	Qx4pcs
	Hx4pcs

Please Assemble on a Carpet
or Clean, Flat Surface to Prevent Scratches

STEP7

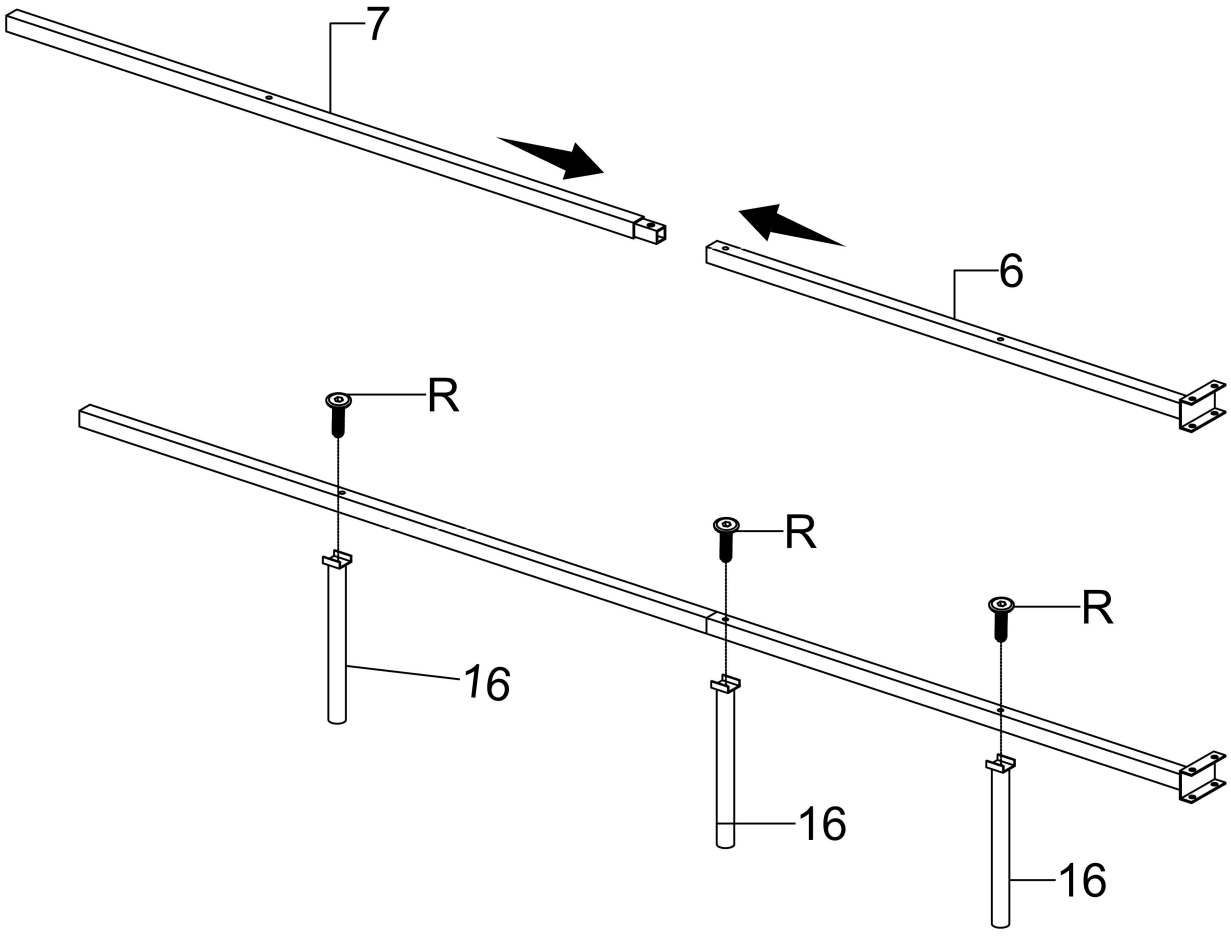

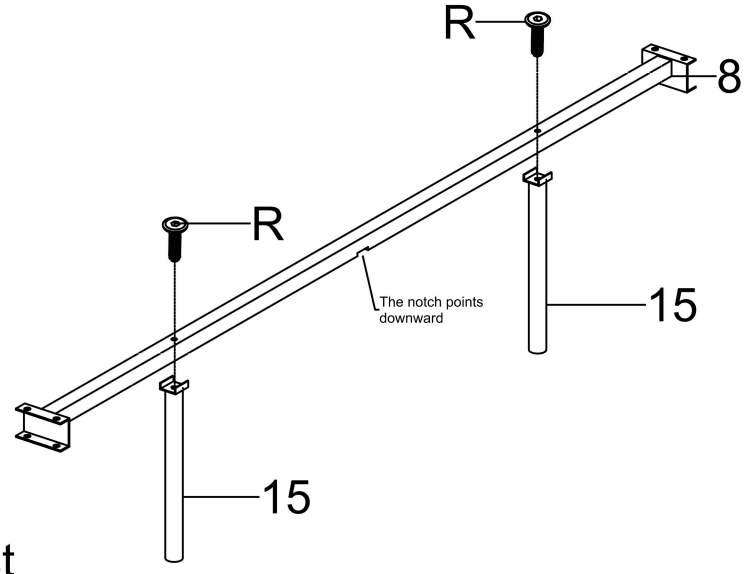

Lock 80% first

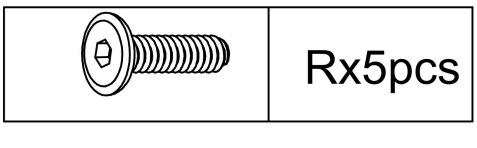

STEP8

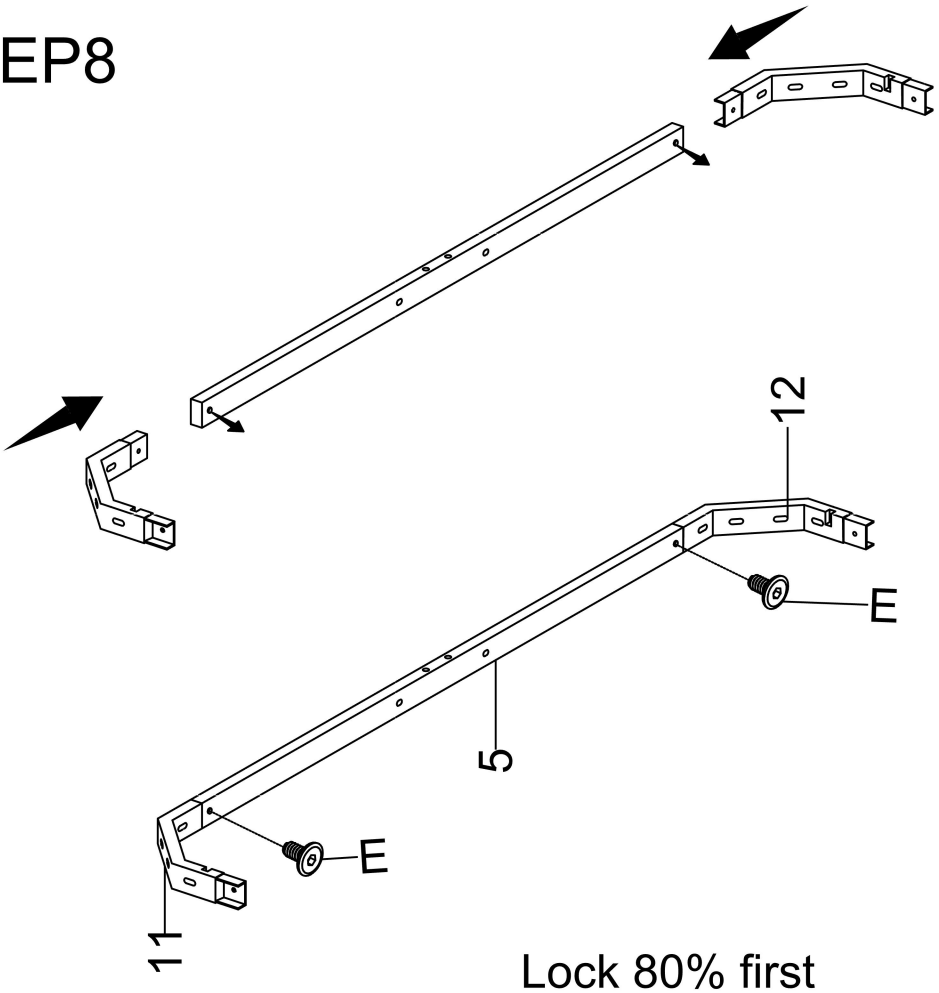

Lock 80% first

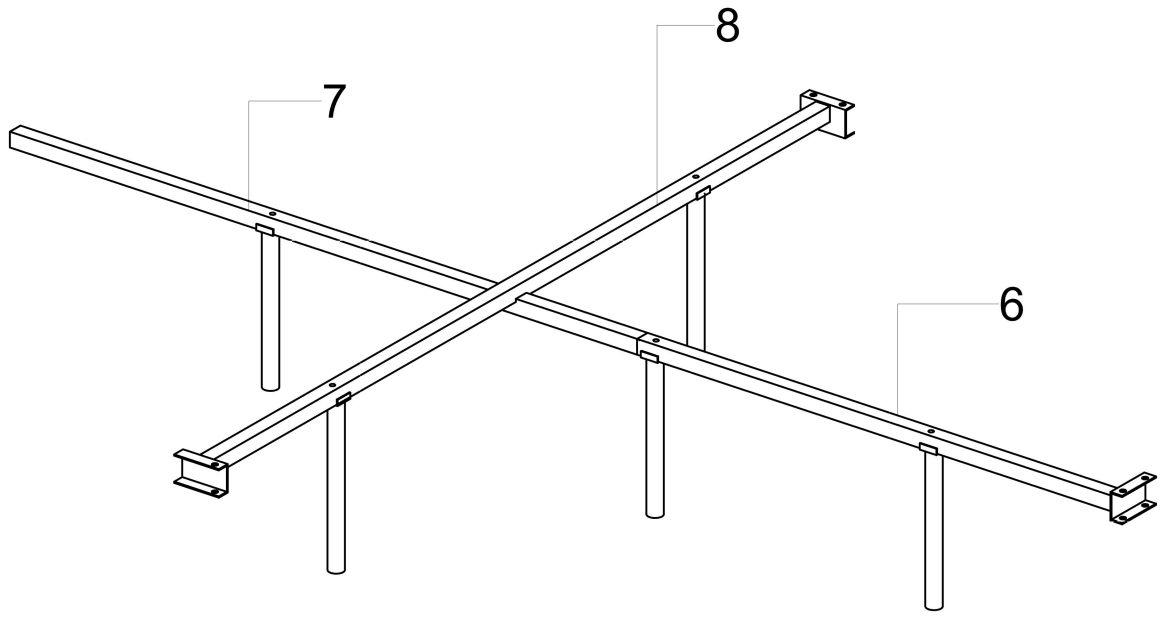

Lock 80% first

	Ex2pcs

STEP9

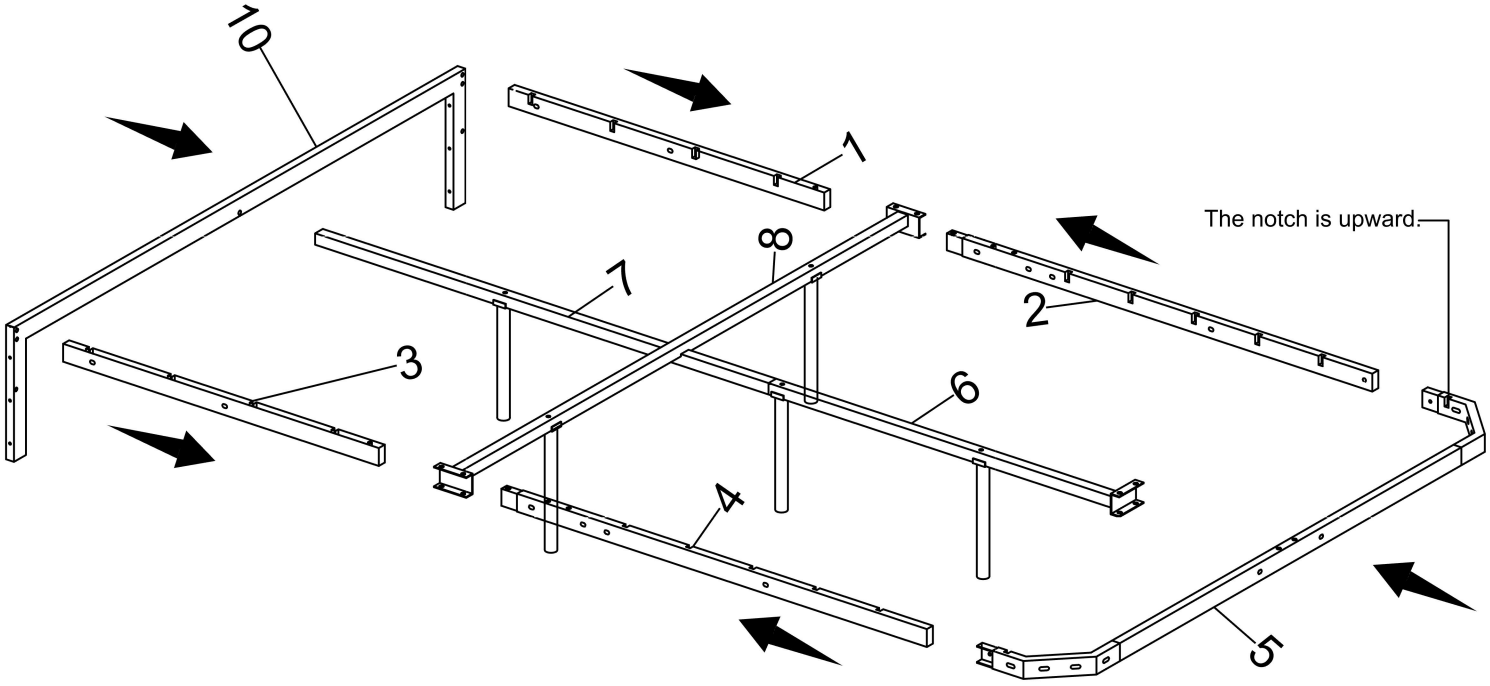

Lock 80% first

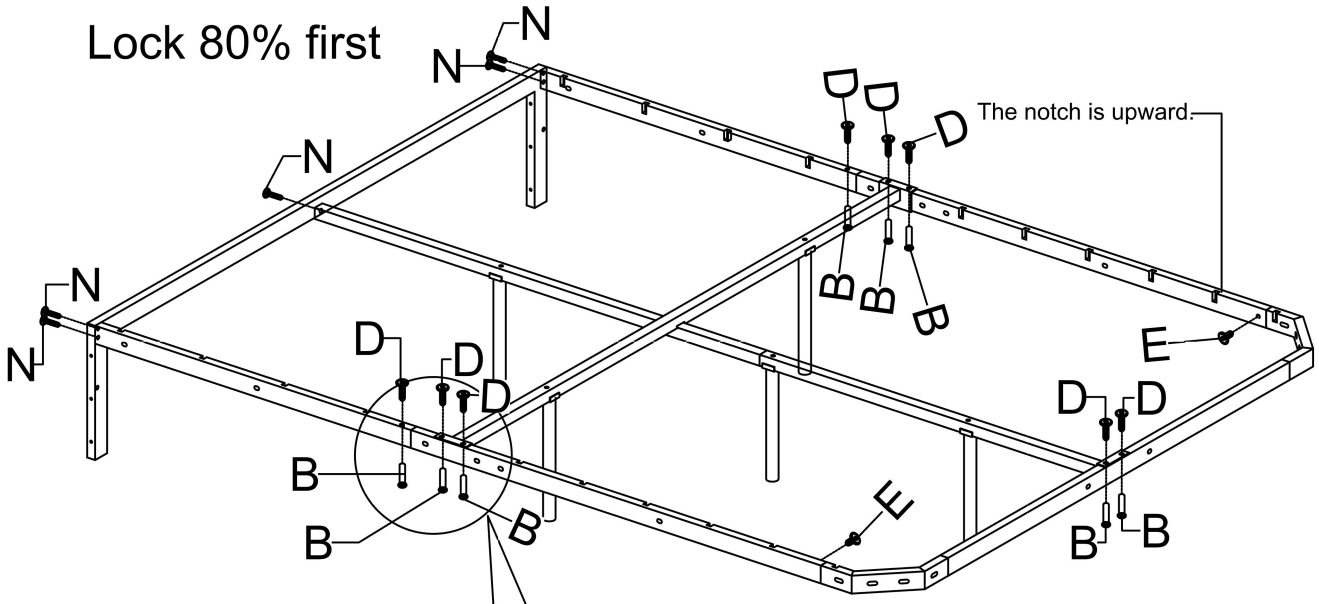

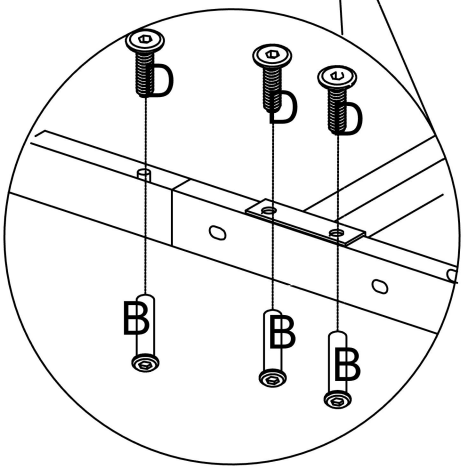

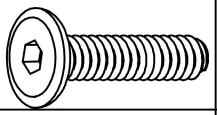	Nx5pcs
	Ex2pcs
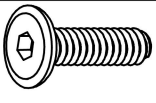	Dx8pcs
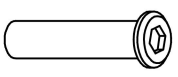	Bx8pcs

STEP10

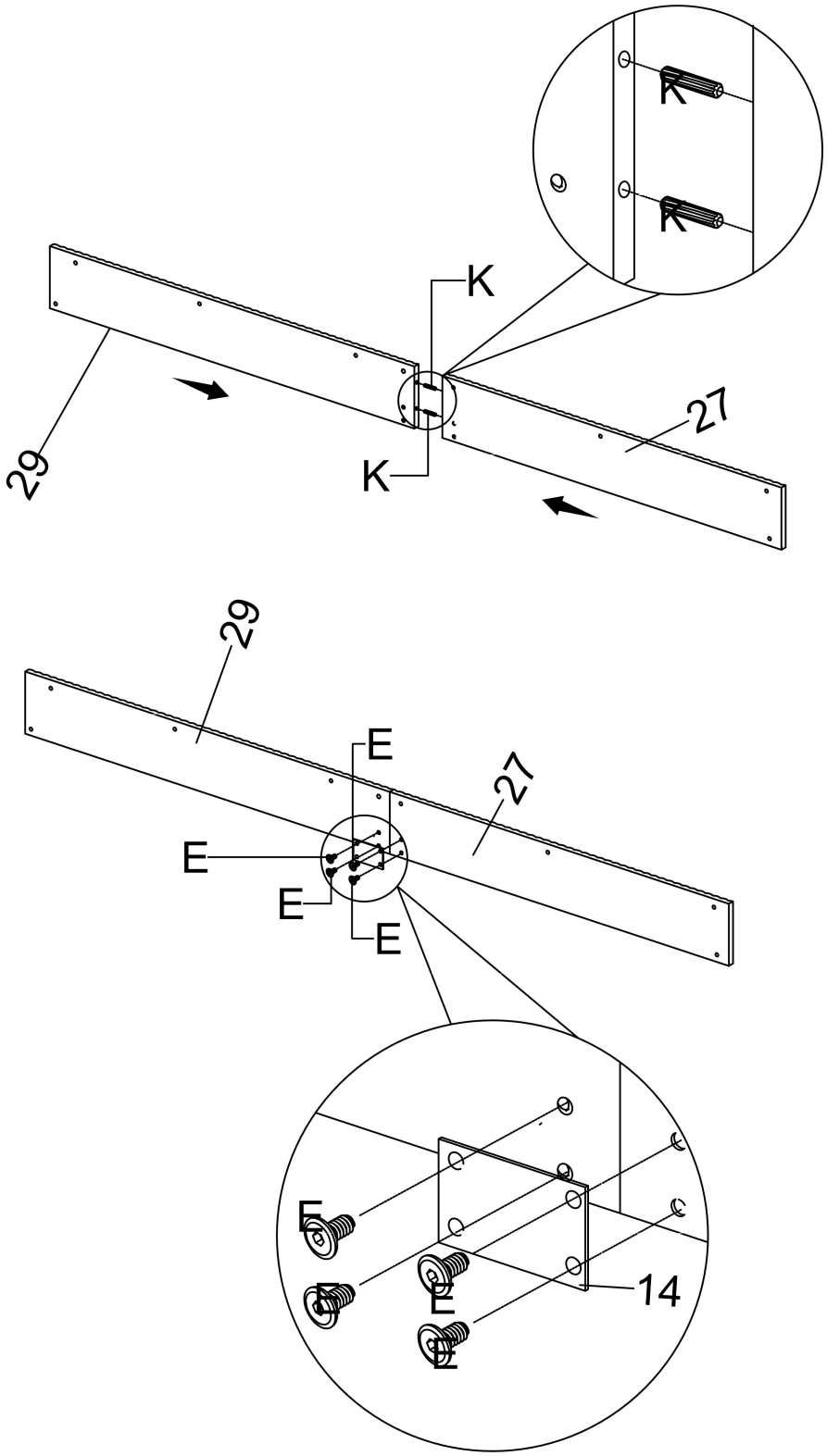

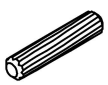	Kx2pcs
	Ex4pcs

STEP11

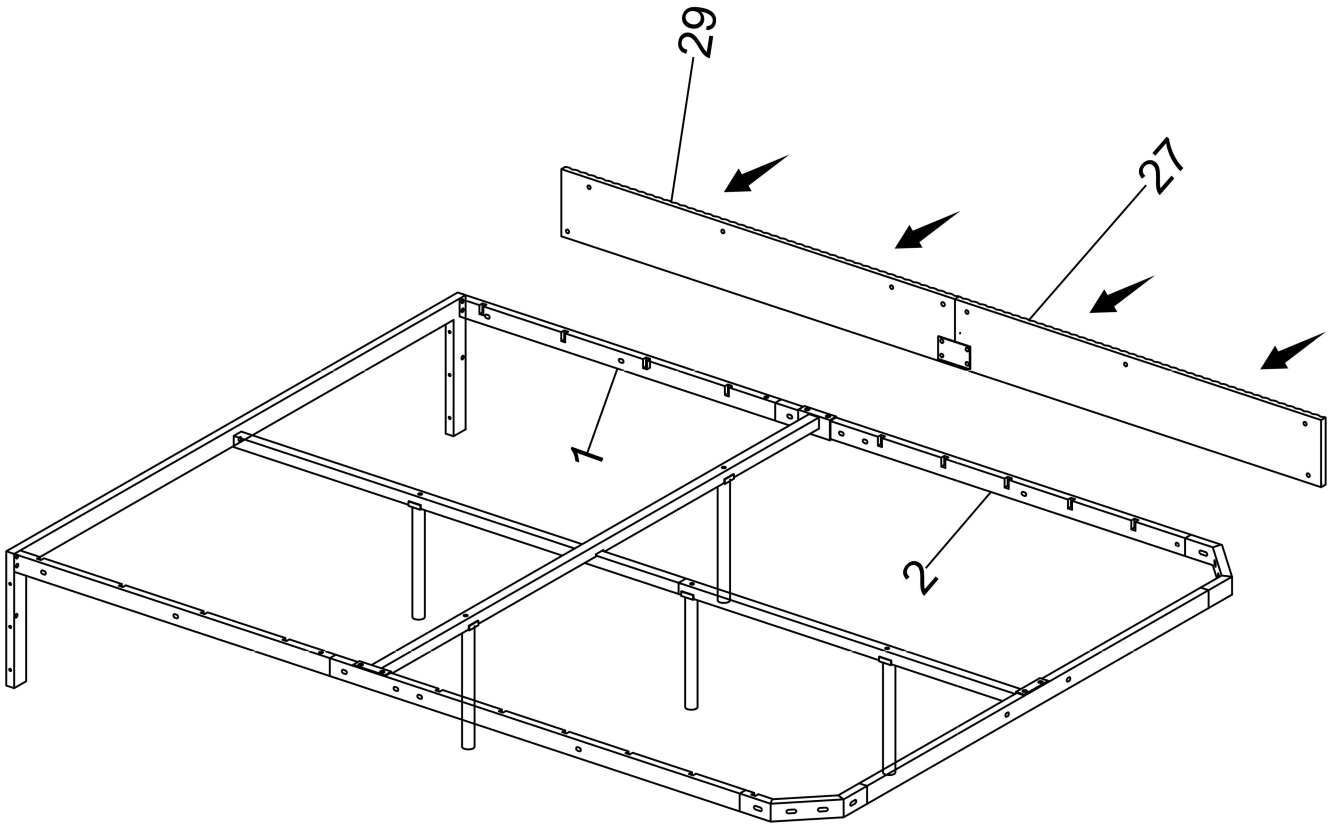

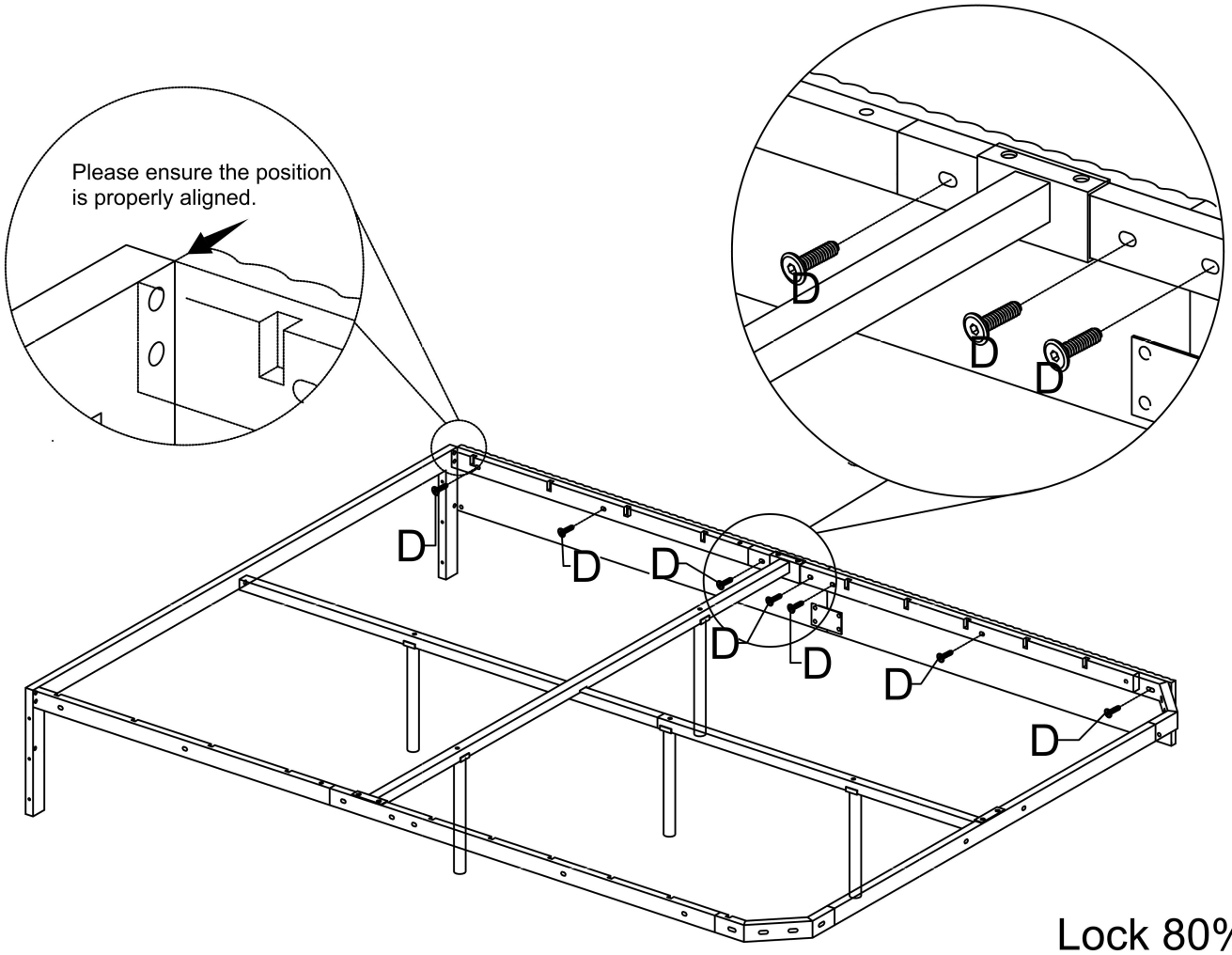

Lock 80% first

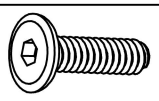	Dx7pcs

STEP12

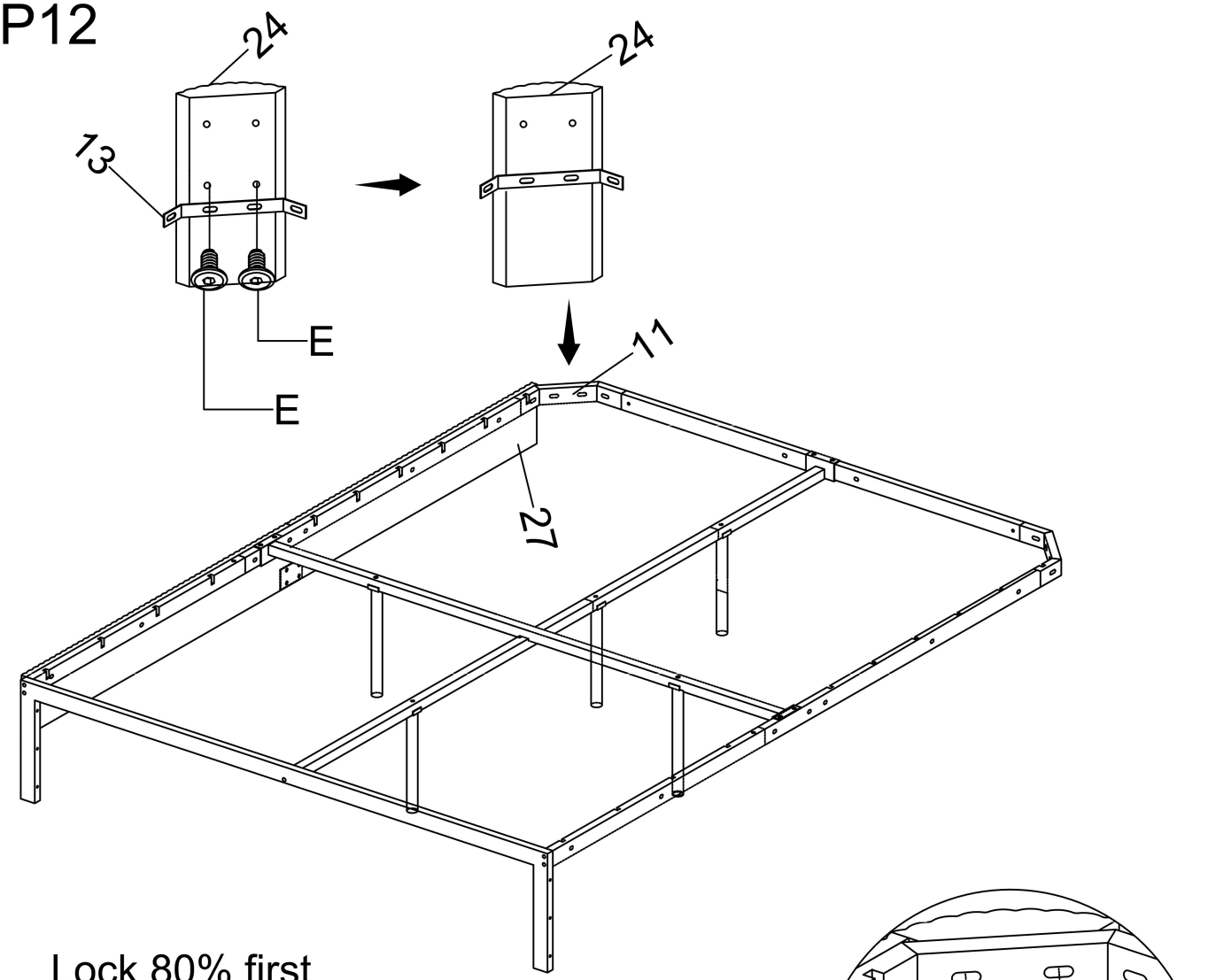

Lock 80% first

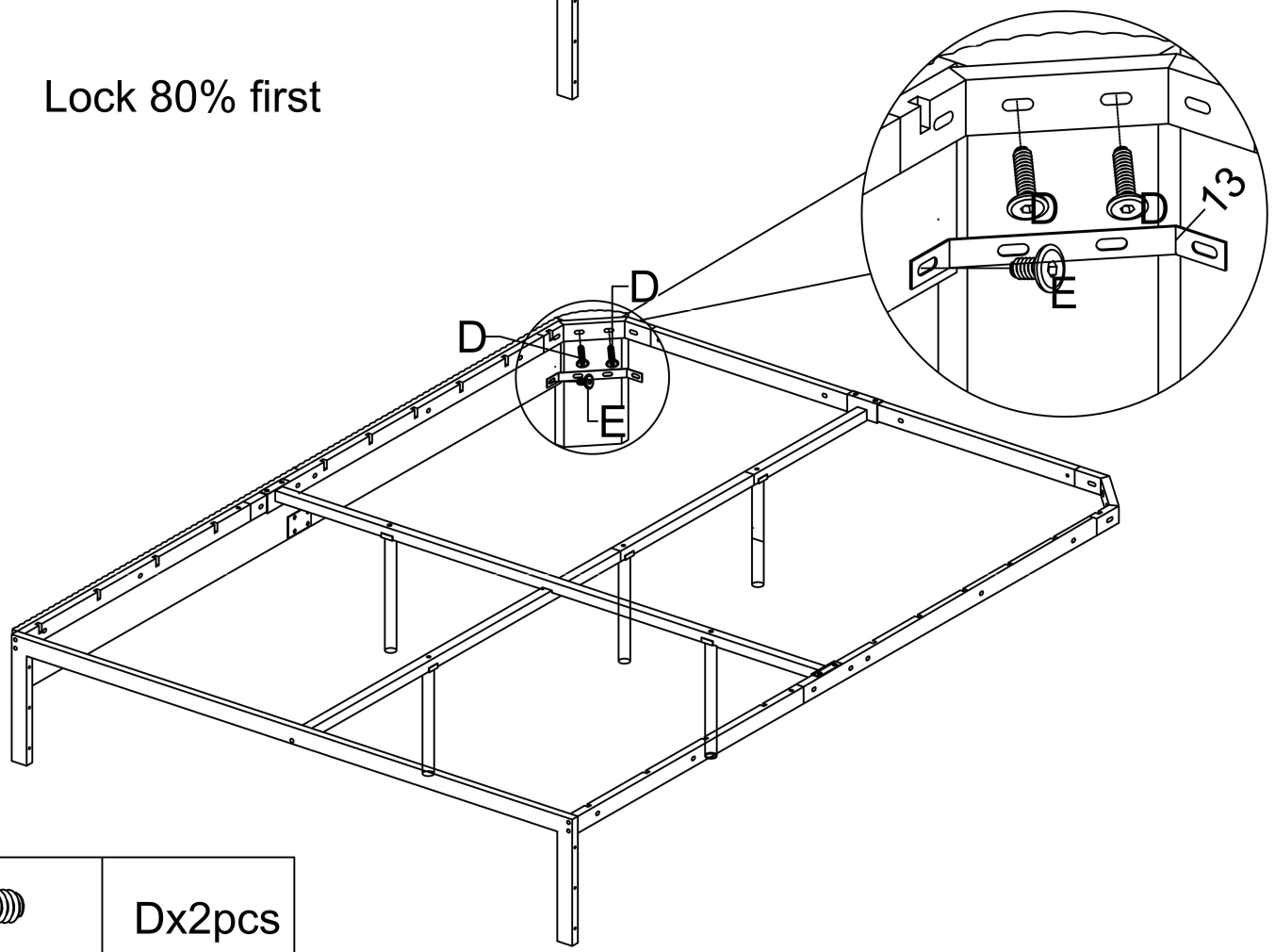

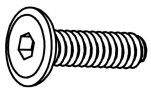	Dx2pcs
	Ex3pcs

STEP13

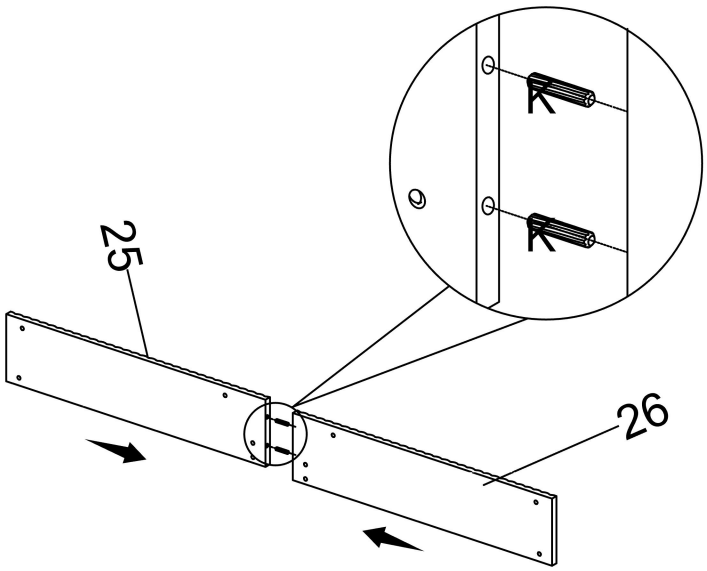

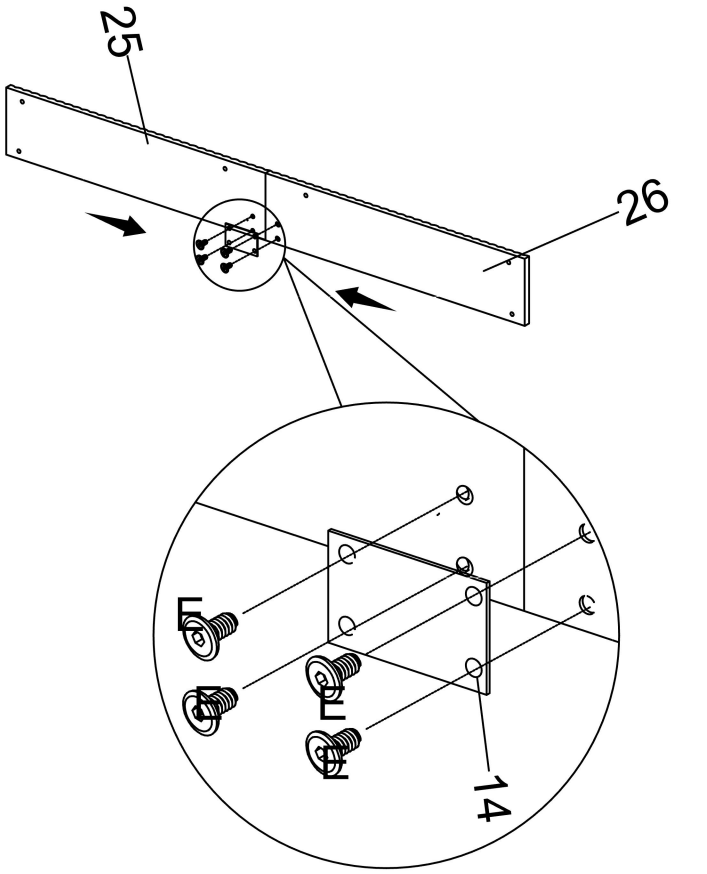

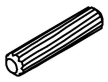	Kx2pcs
	Ex4pcs

STEP14

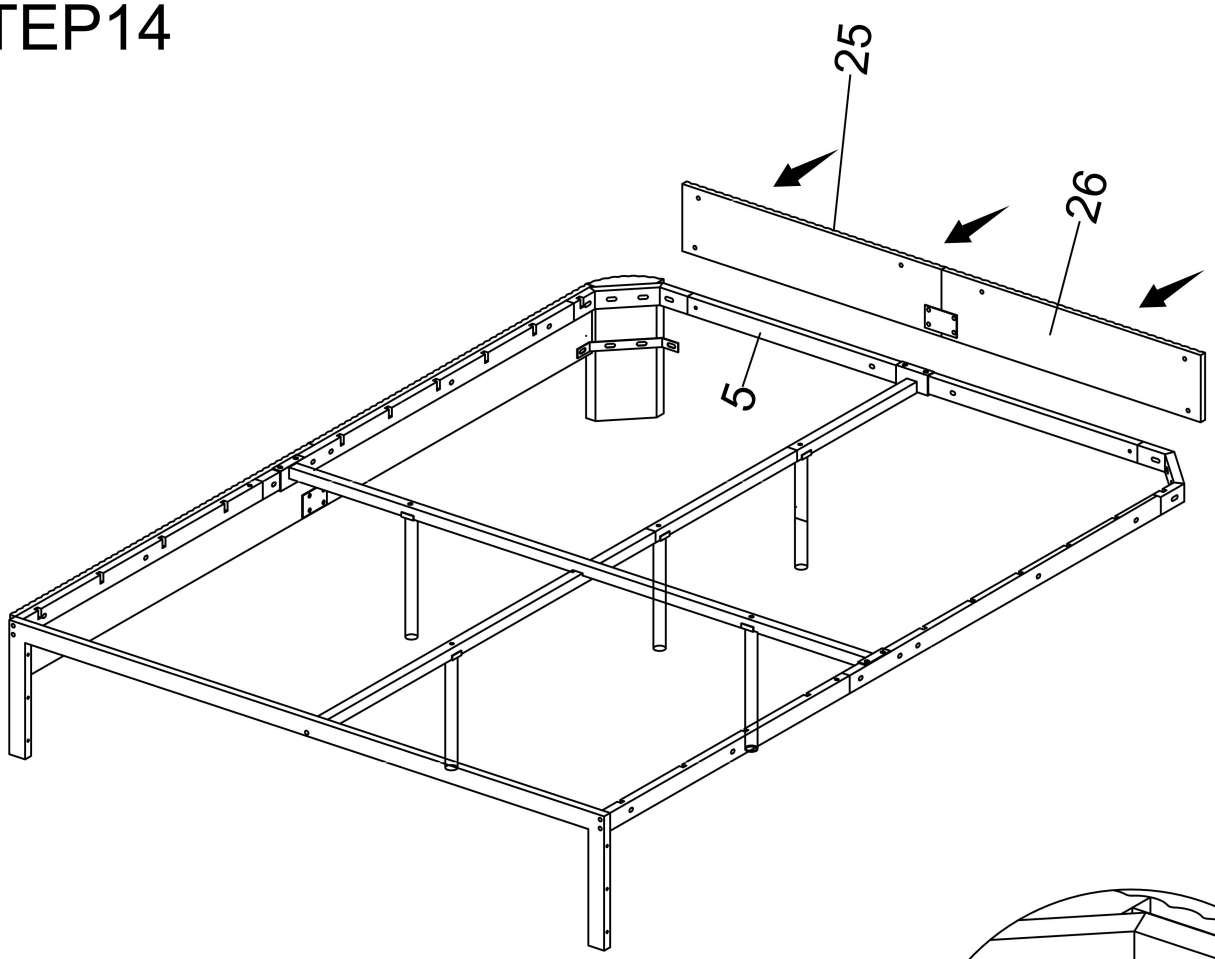

Lock 80% first

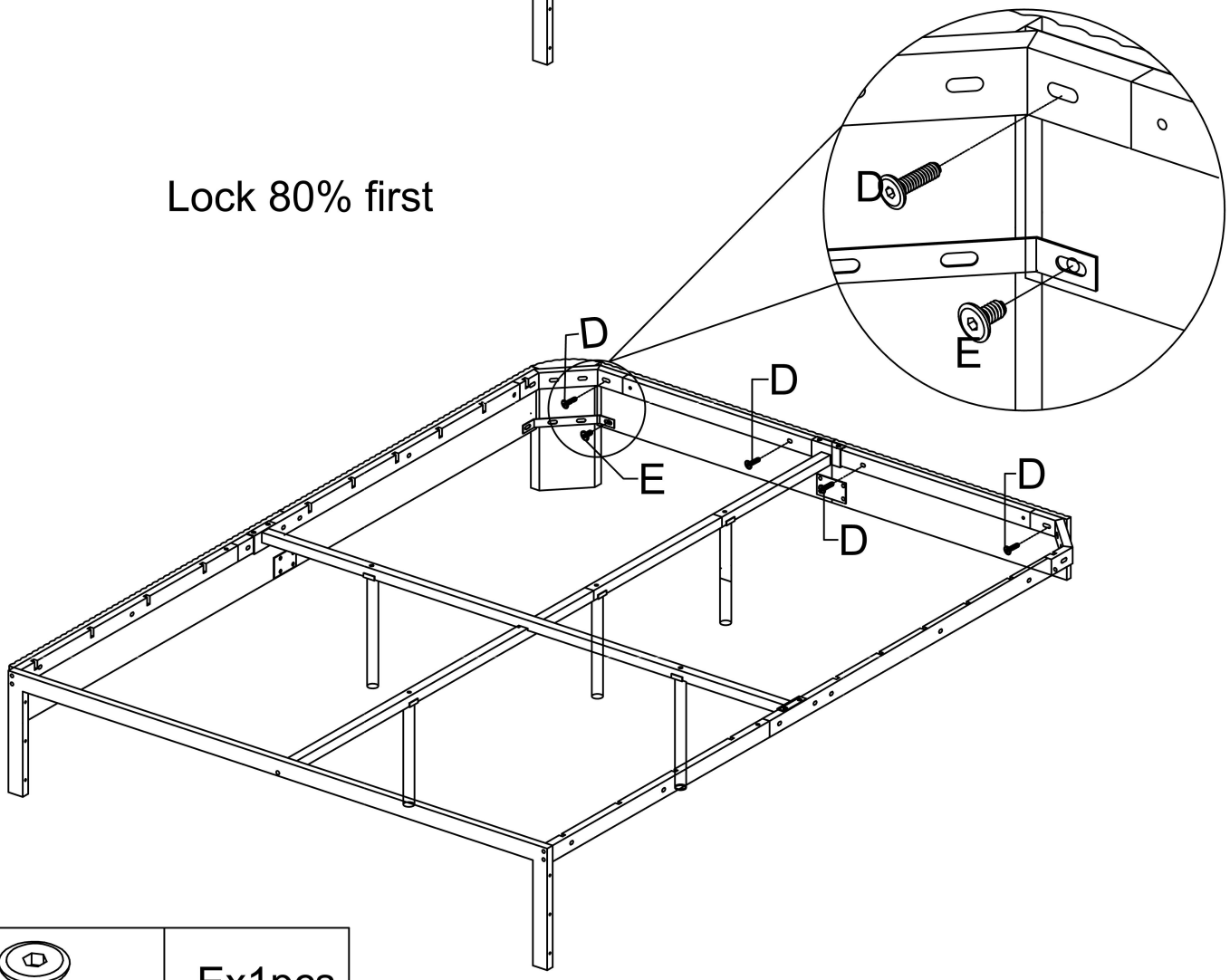

	Ex1pcs
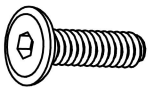	Dx4pcs

STEP15

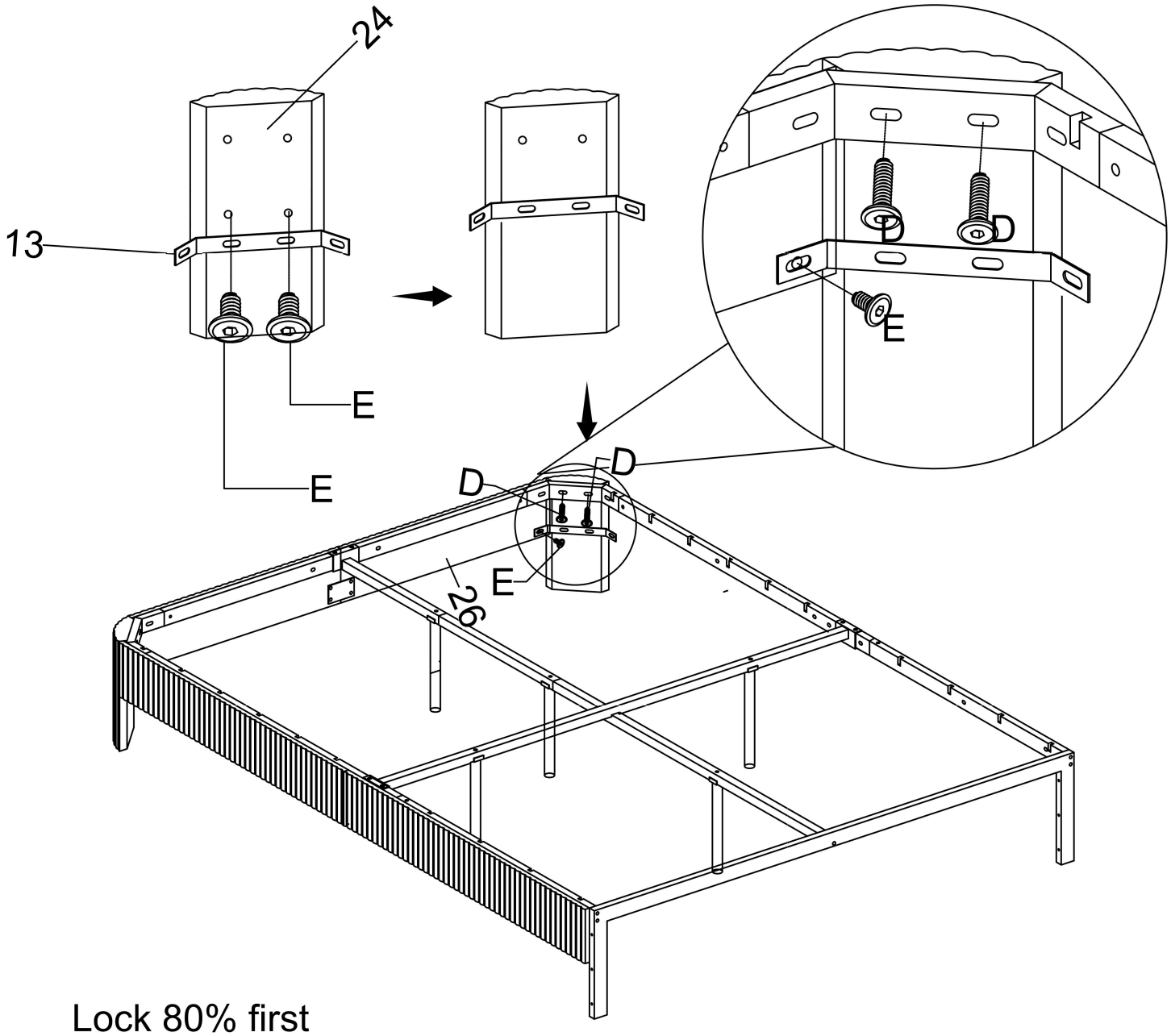

Lock 80% first

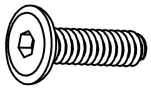	Dx2pcs
	Ex3pcs

STEP16

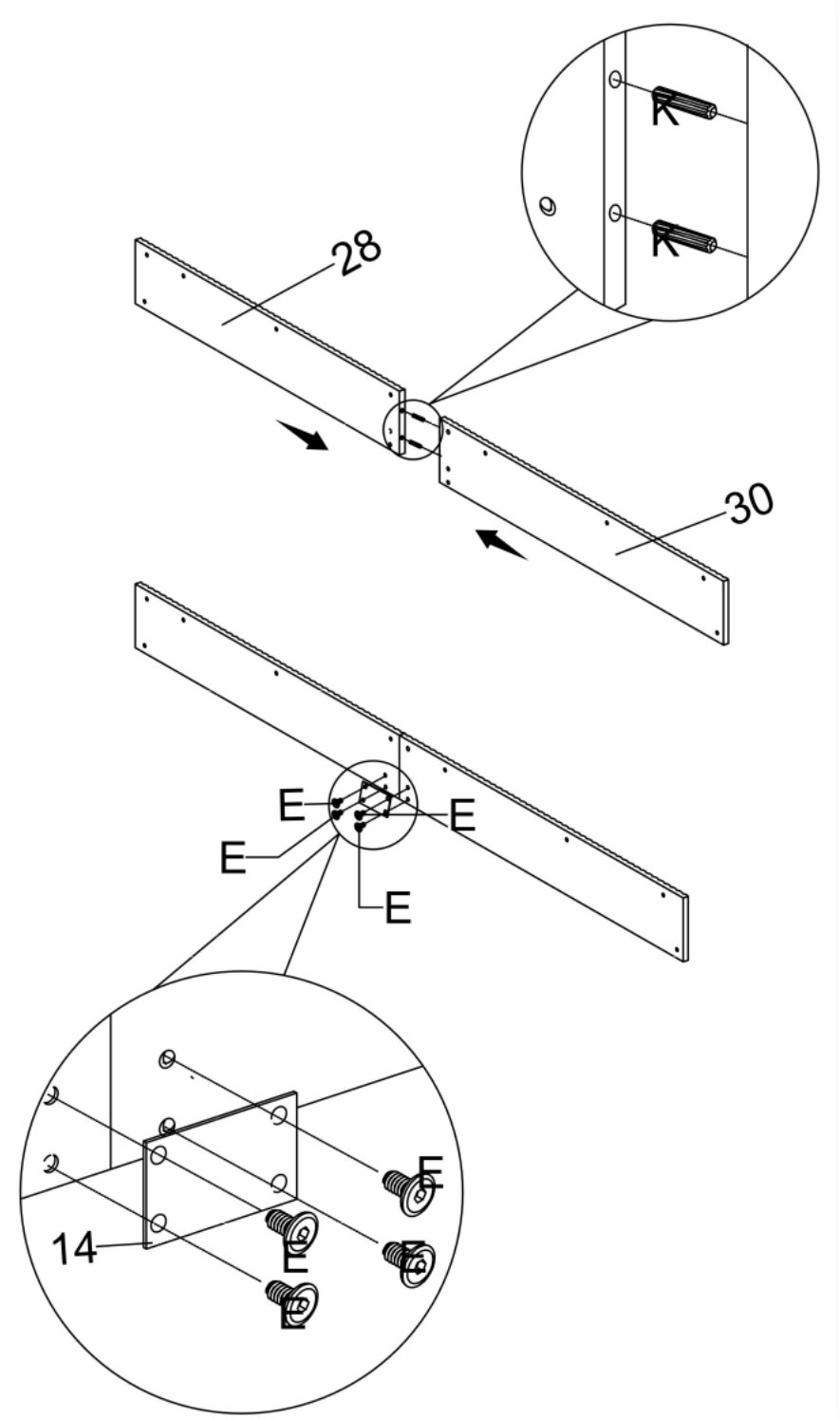

	Kx2pcs
	Ex4pcs

STEP17

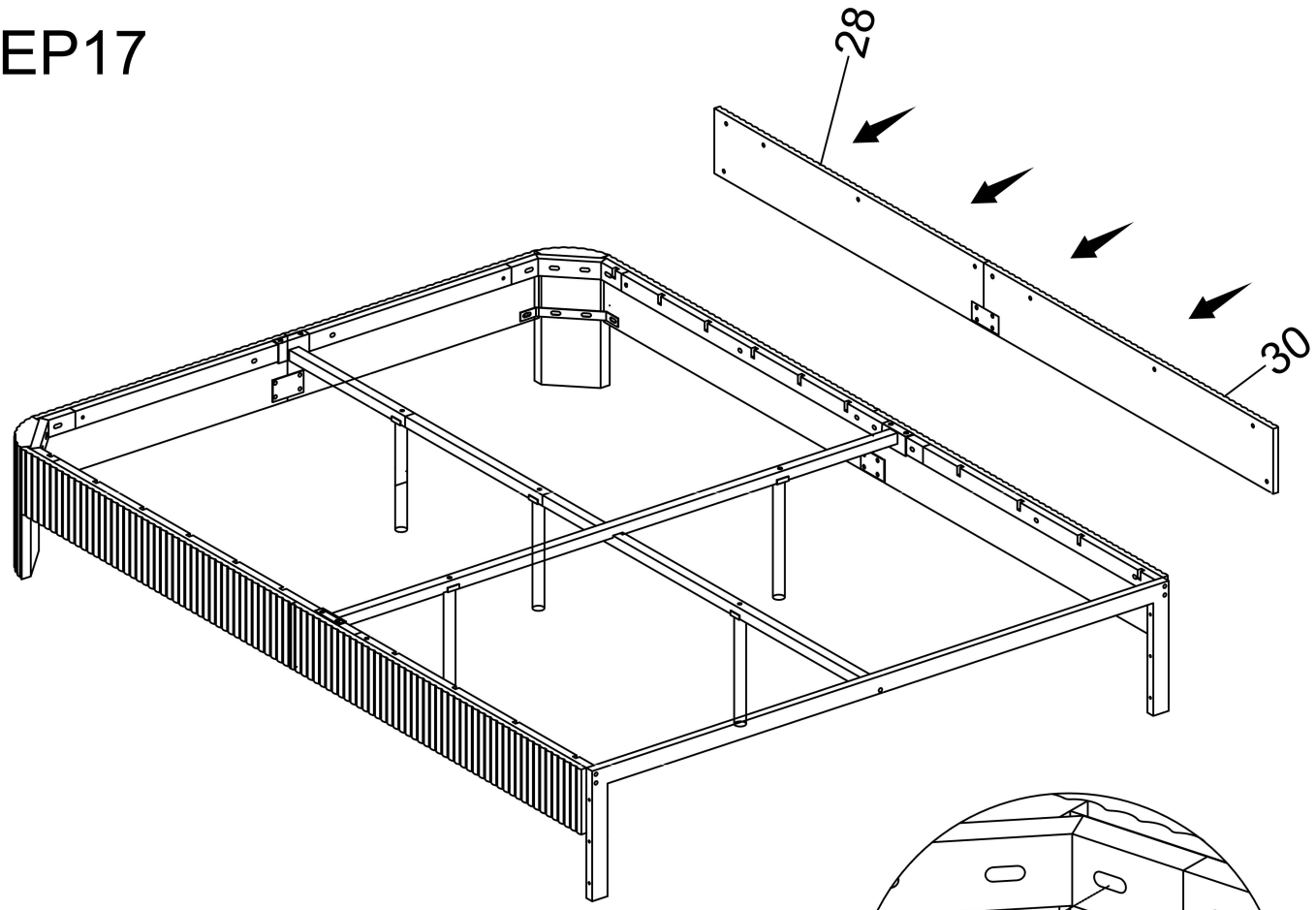

Lock 80% first

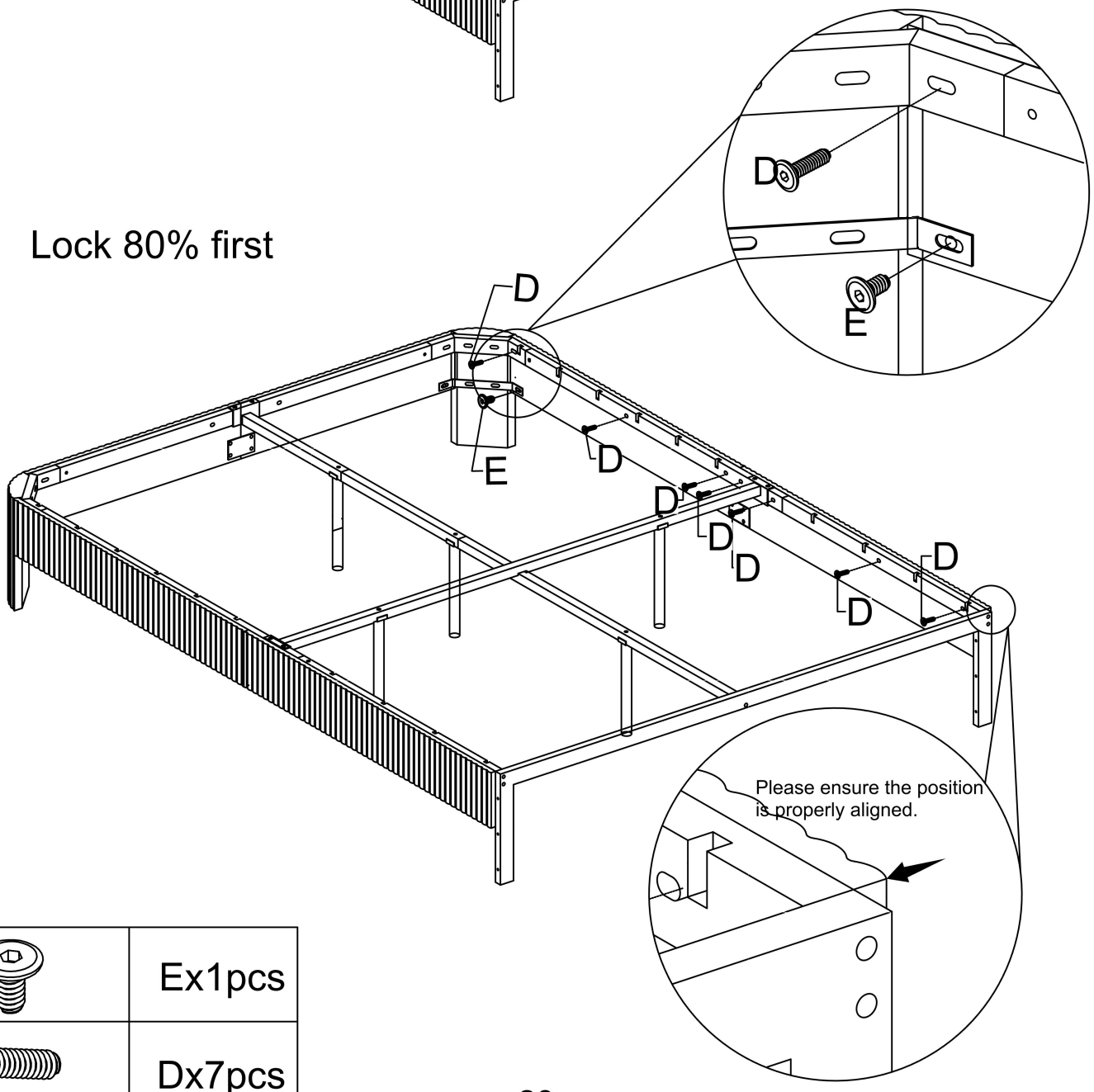

	Ex1pcs
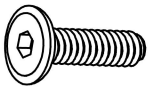	Dx7pcs

STEP18

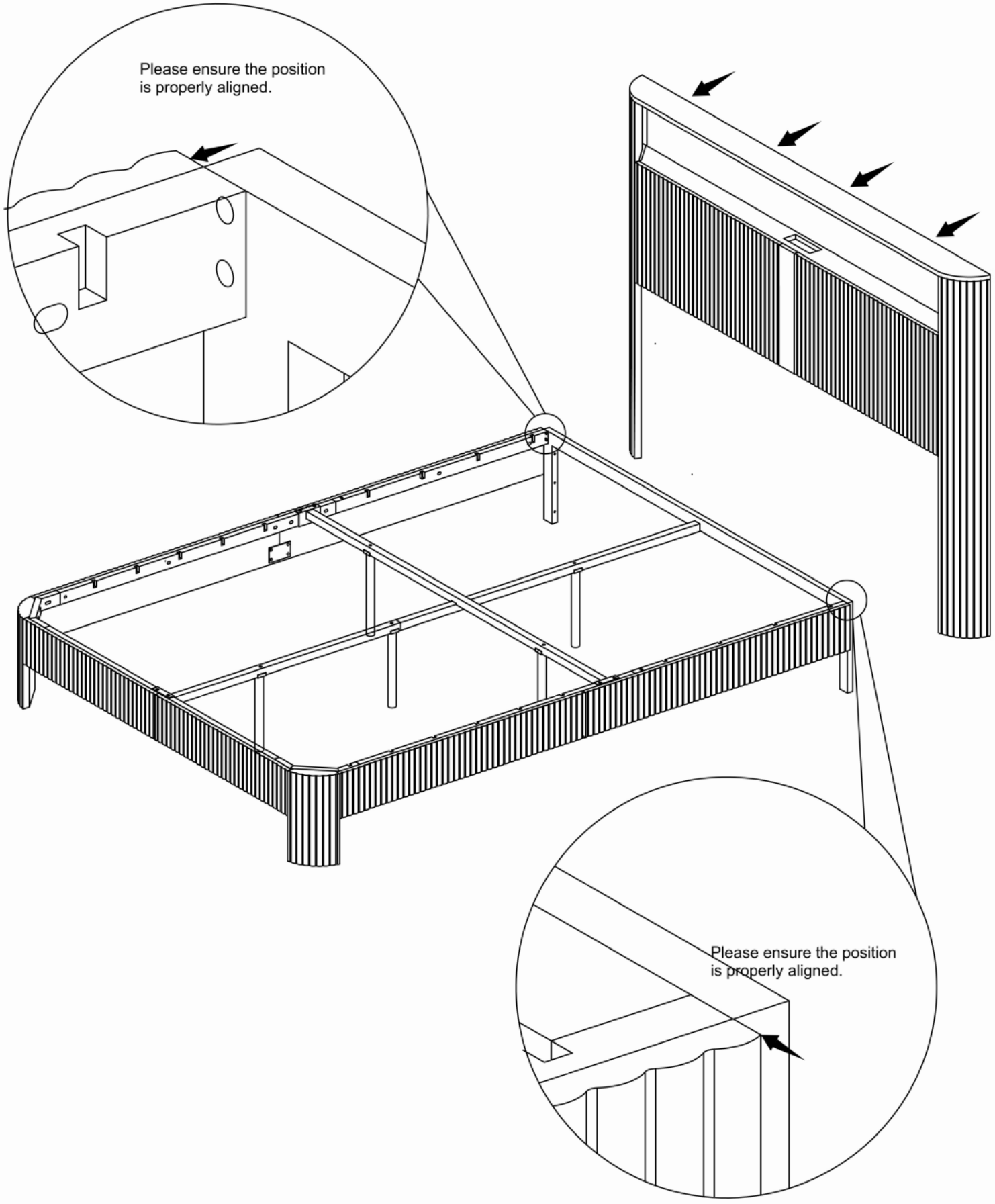
Please ensure the position
is properly aligned.
Please ensure the position
is properly aligned.

STEP19

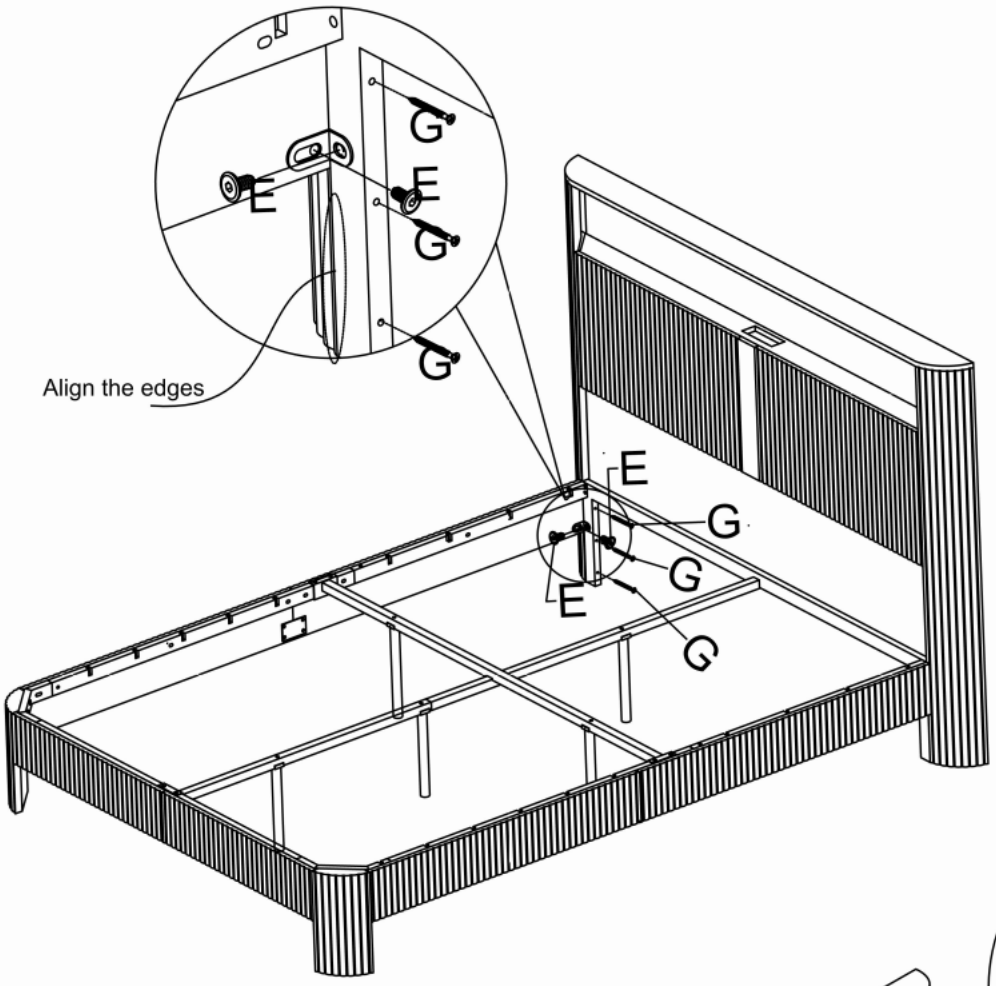

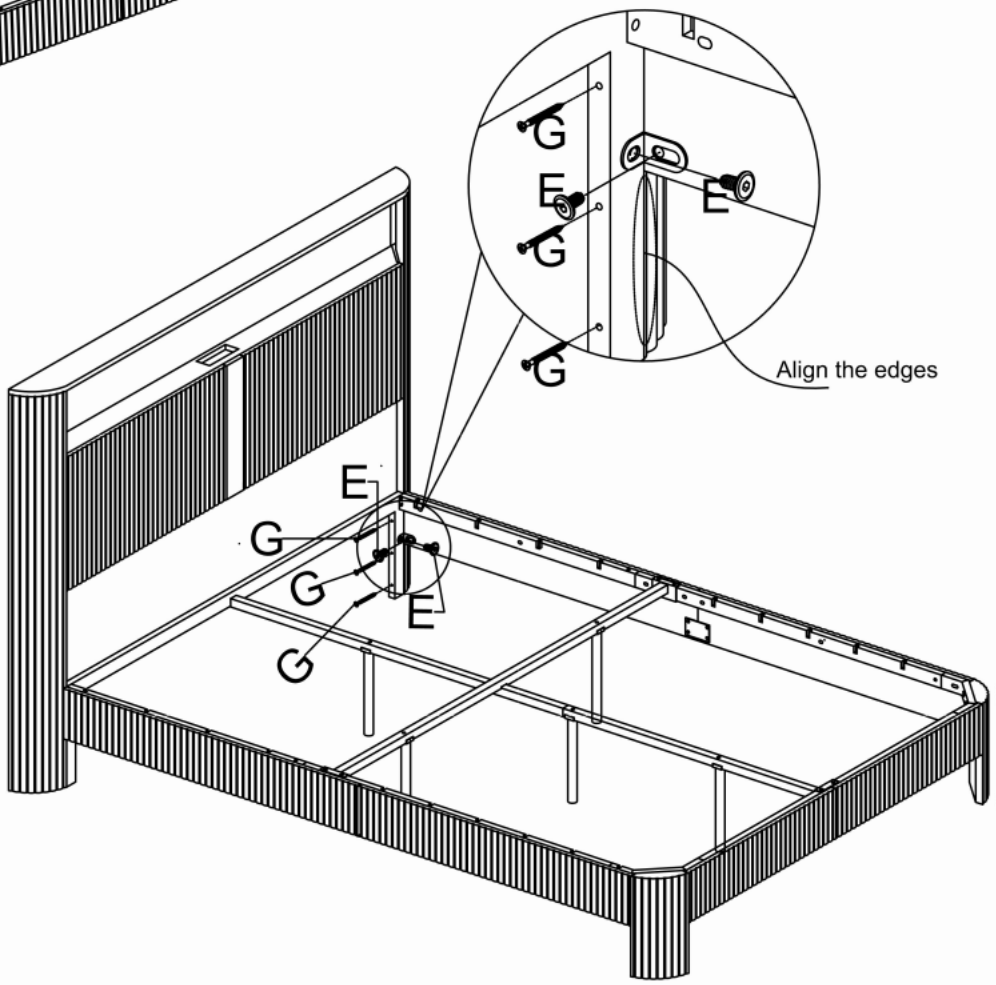

	Ex4pcs
	Gx6pcs
	Vx2pcs

STEP20

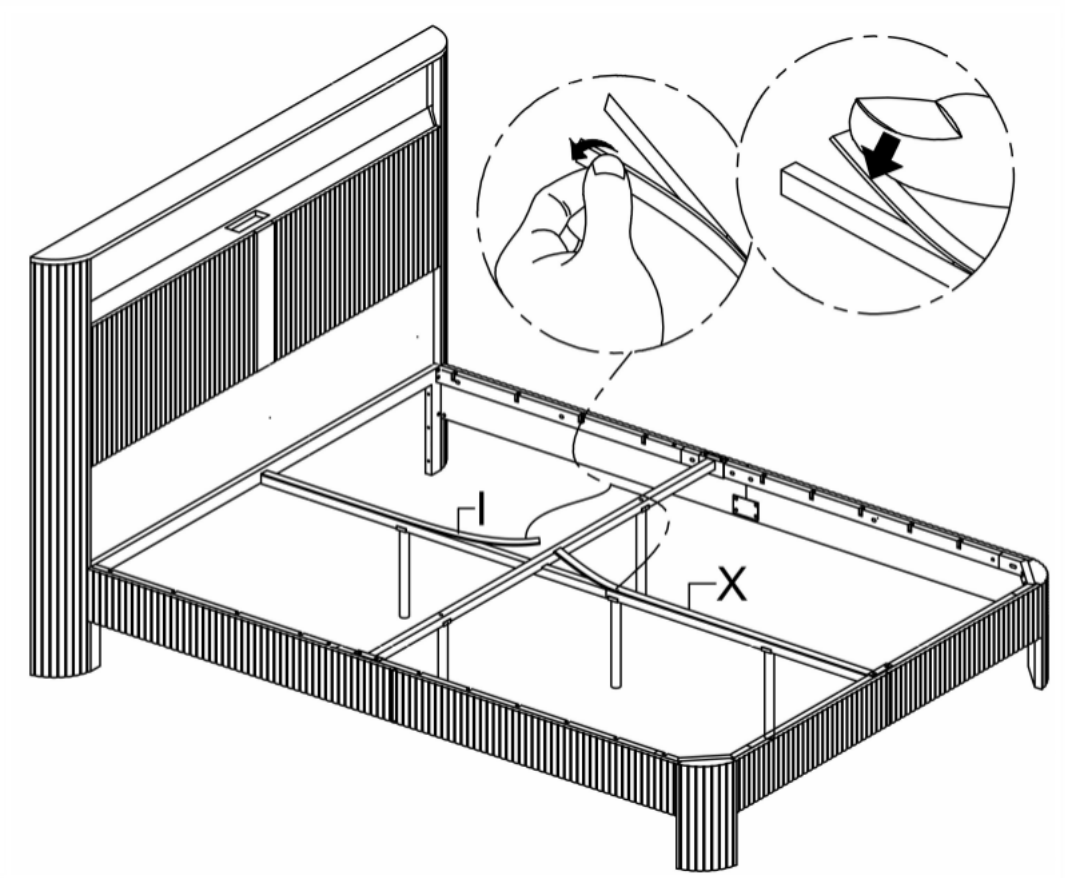

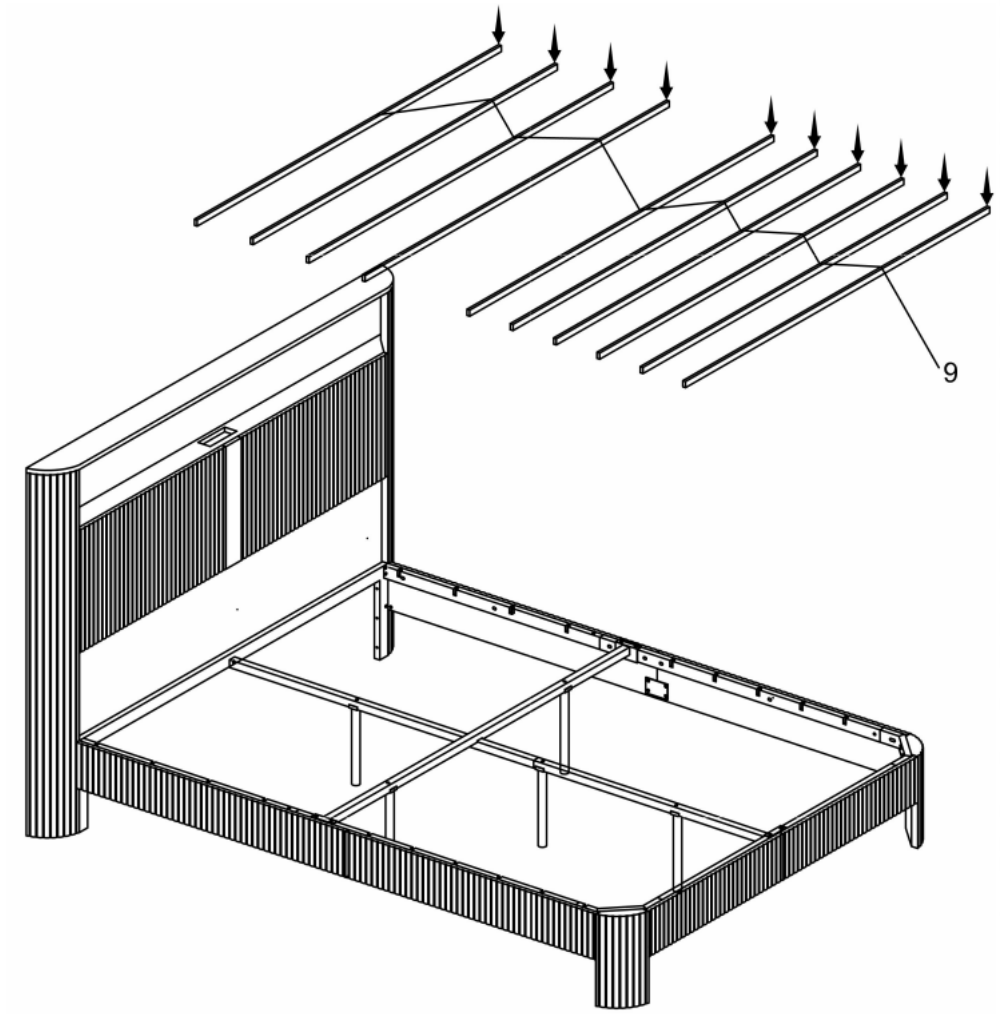

long	Xx1pcs
short	Ix1pcs

STEP21

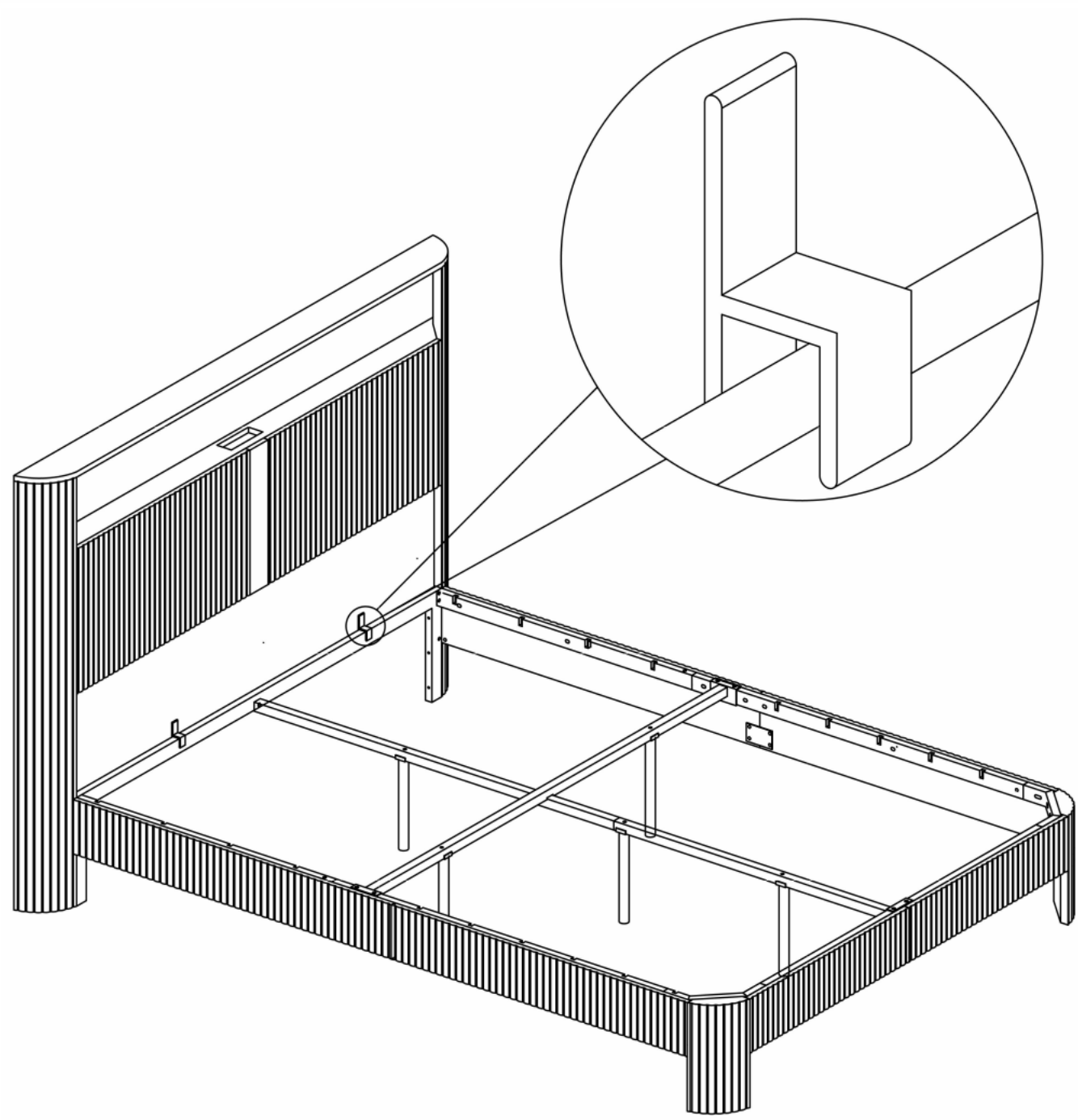

	Lx2pcs

STEP22

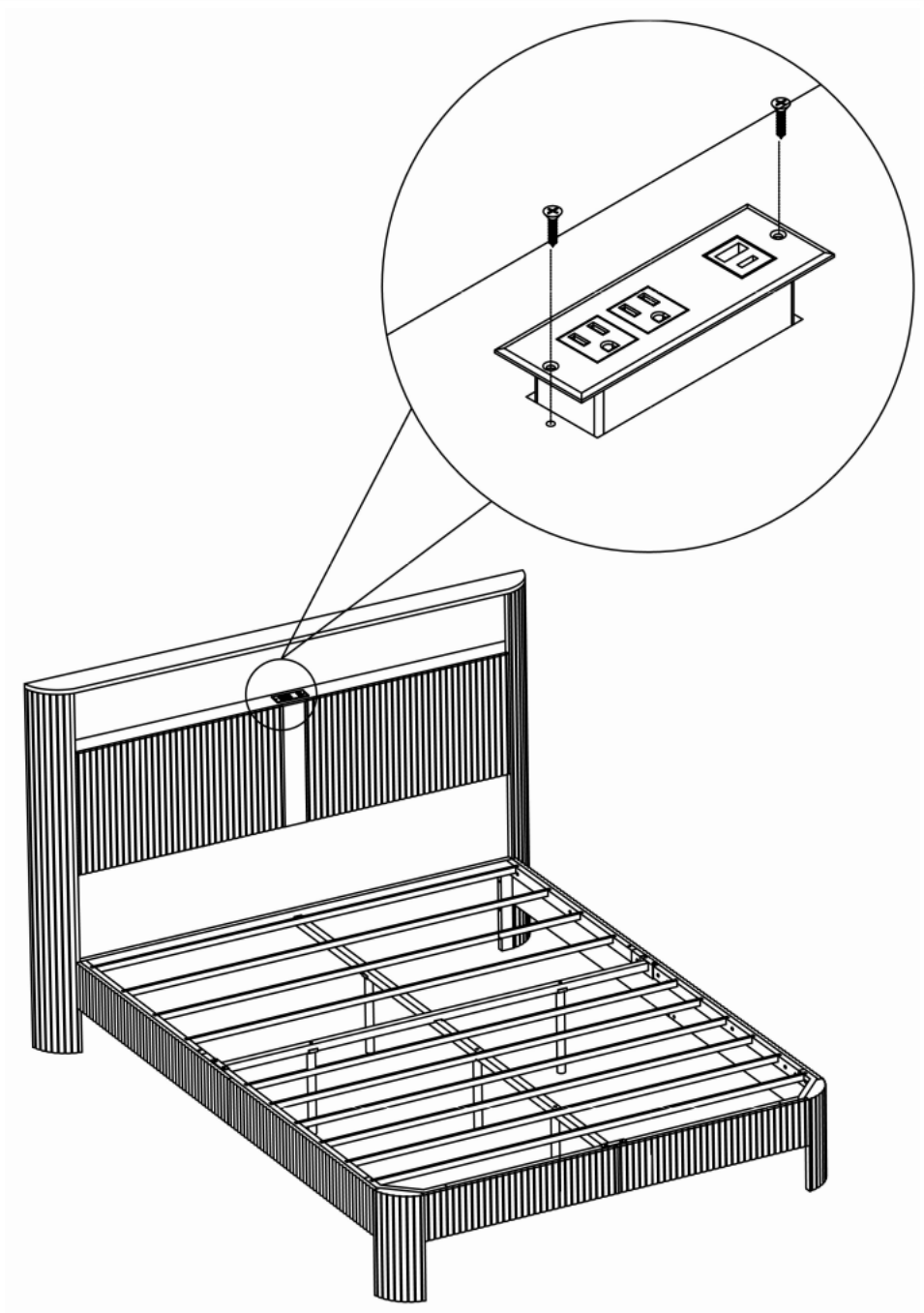

Attention
After completing all installation steps.
Ensure each screw isfully tightened.
If any screw is loose. Tighten it completely

	Yx2pcs
	Px1pcs