ASSEMBLY INSTRUCTIONS

1500mm

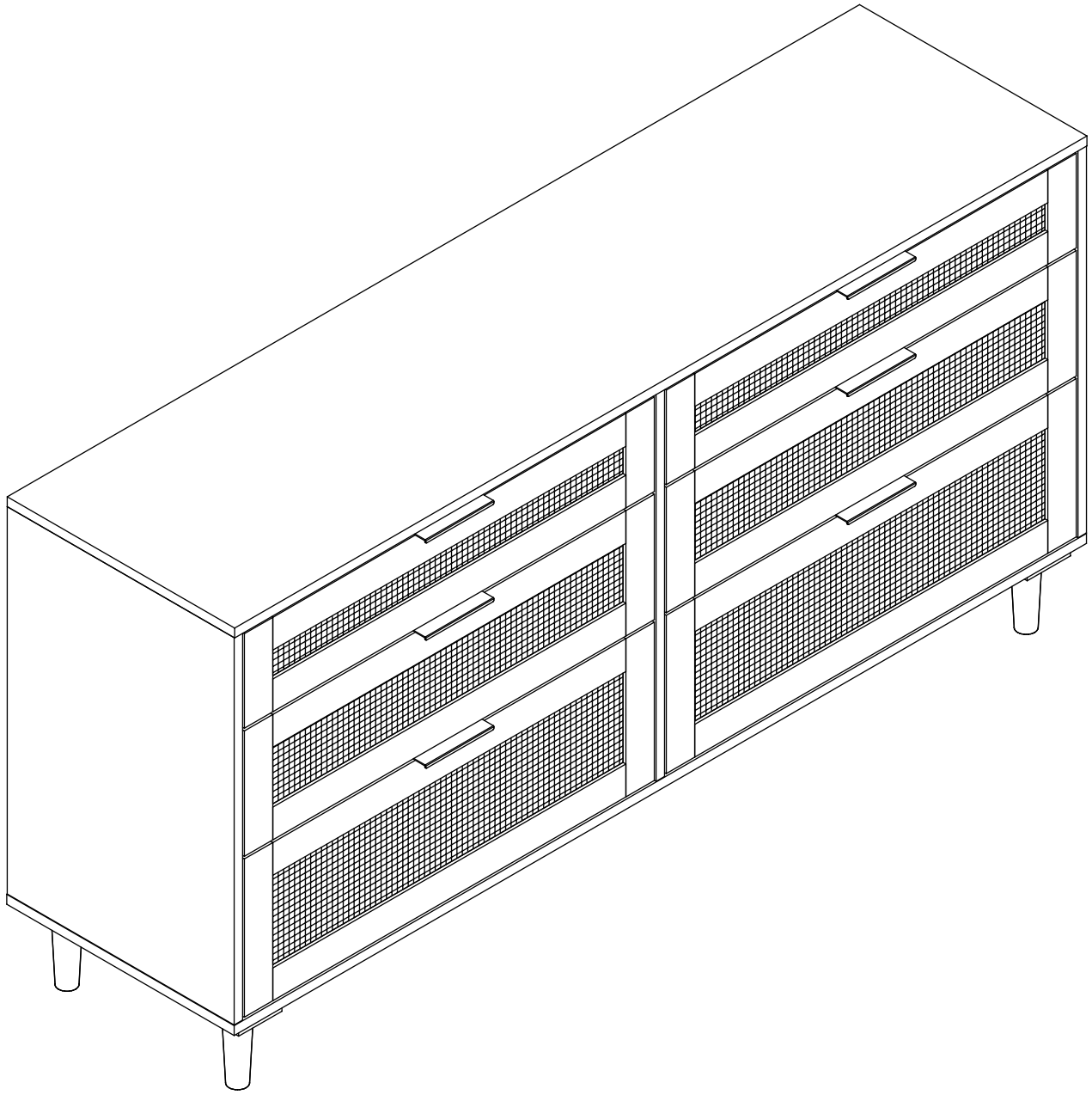

PANEL LAYOUT

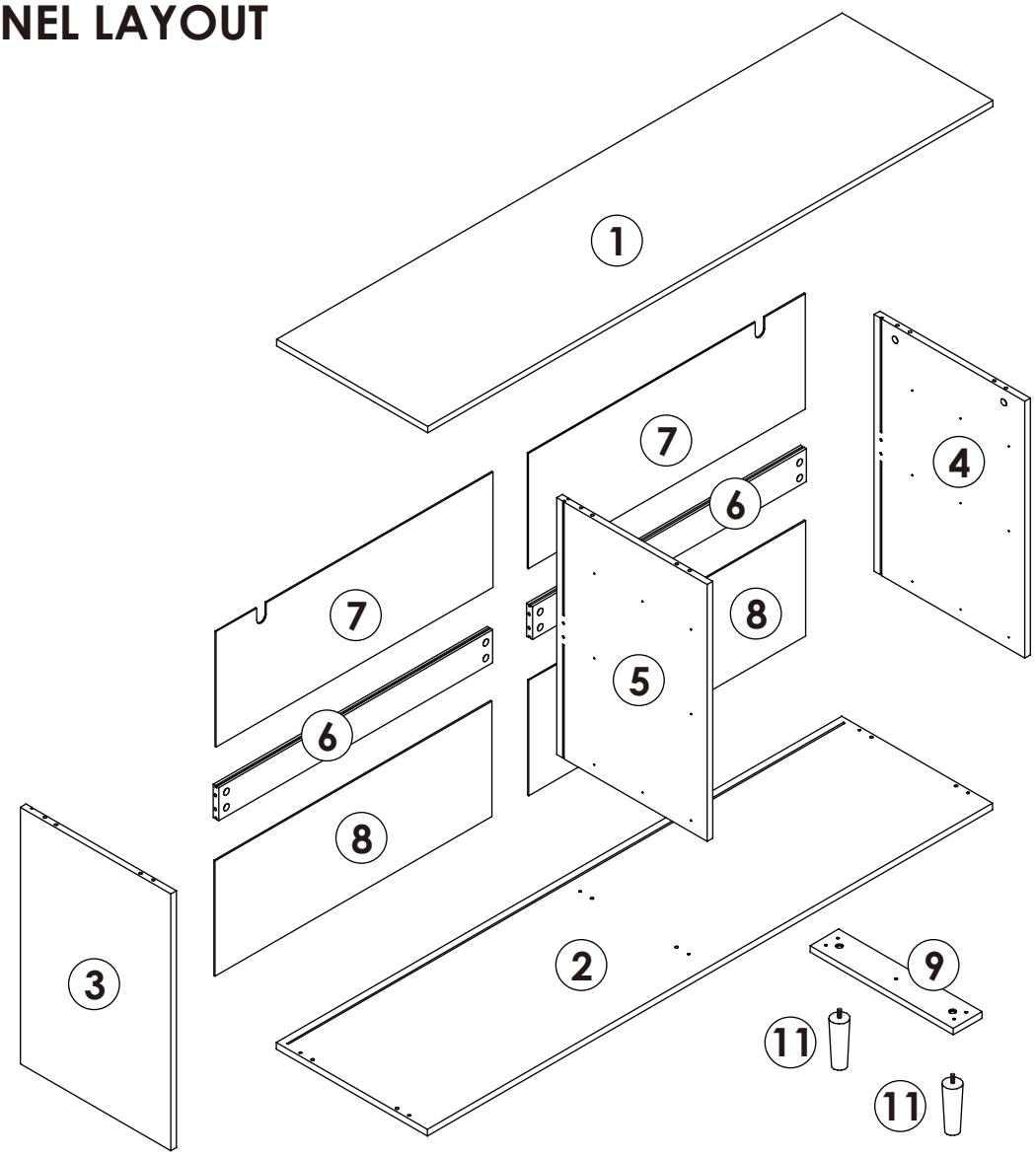

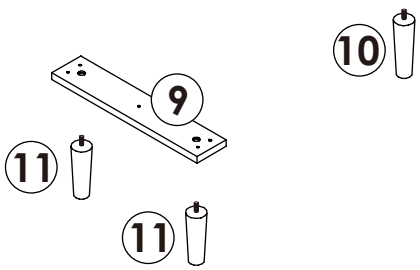

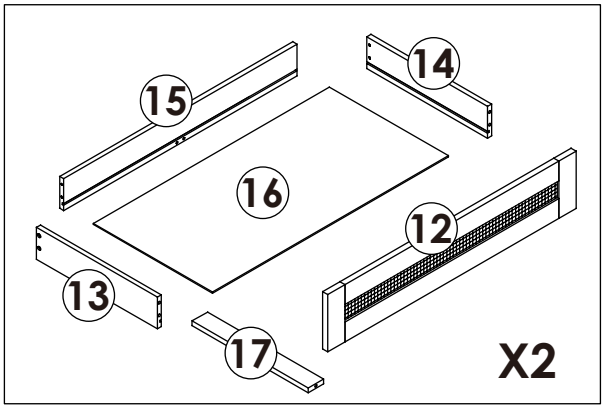

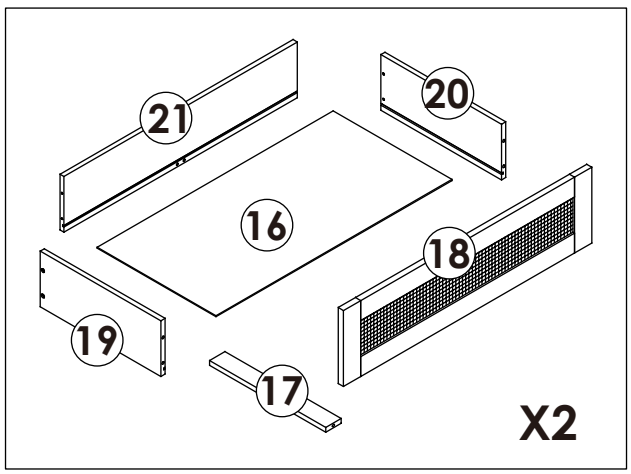

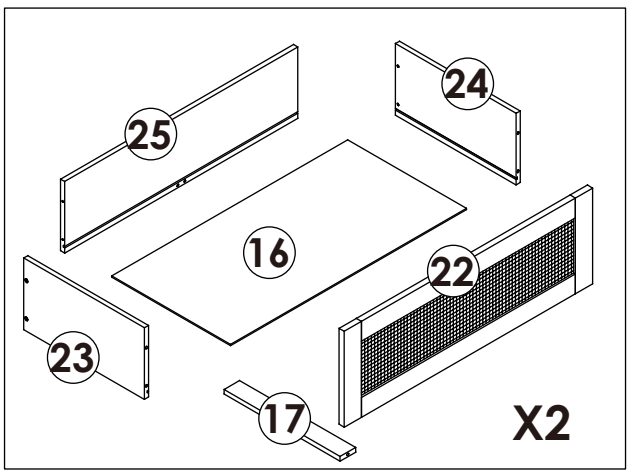

LIST OF PANELS

1 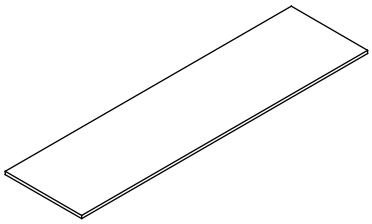 x1	2 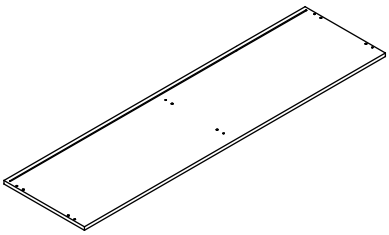 x1	3 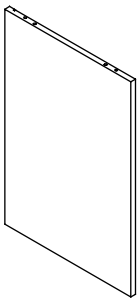 x1
4 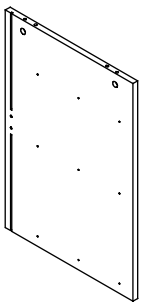 x1	5 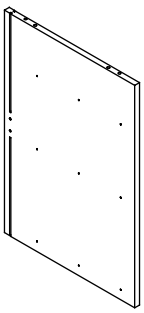 x1	6 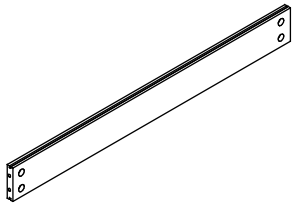 x2
7 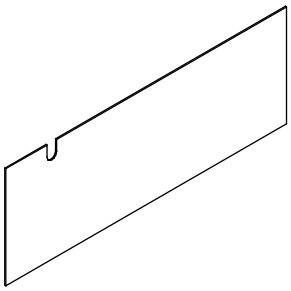 x2	8 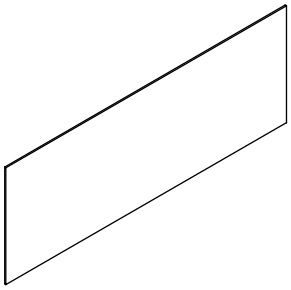 x2	9 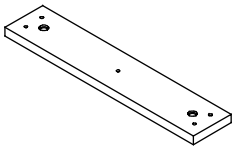 x2
10 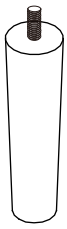 x1	11 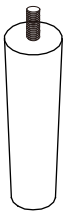 x4	12 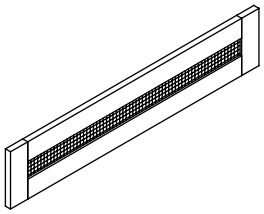 x2
13 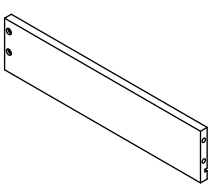 x2	14 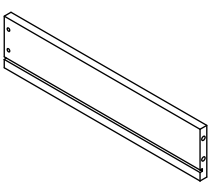 x2	15 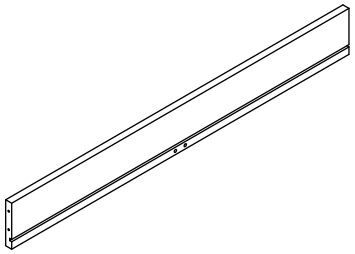 x2

LIST OF PANELS

16 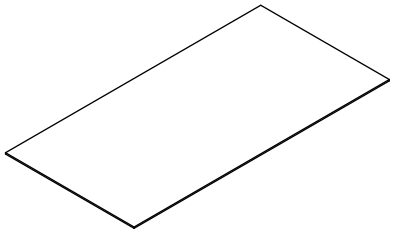 x6	17 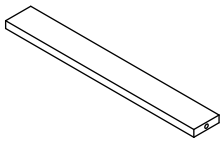 x6	18 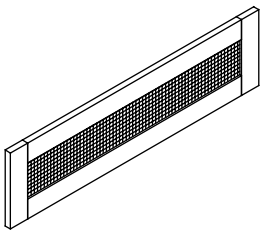 x2
19 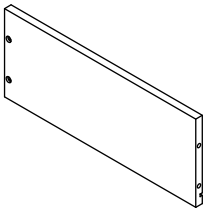 x2	20 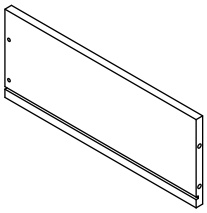 x2	21 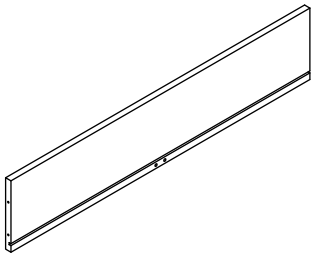 x2
22 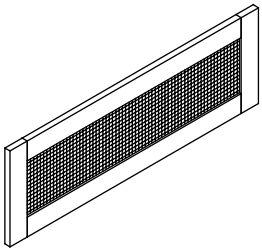 x2	23 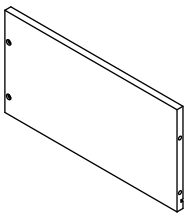 x2	24 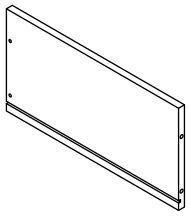 x2
25 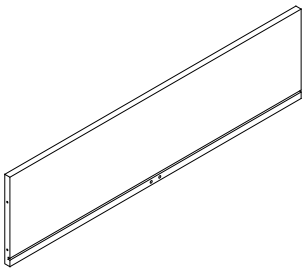 x2		

HARDWARES LIST

A 6x35MM 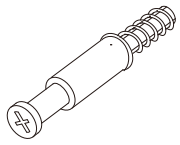 x40	**B** 15x9.5MM 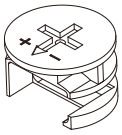 x44	**C** 6x30MM 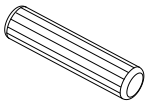 x12	**D** 4x40MM 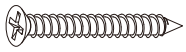 x42	**E** 3x14MM 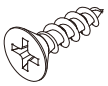 x72
F 4x14MM 4x35MM 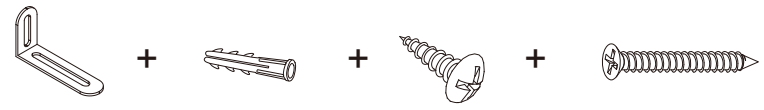 **F1** + **F2** + **F3** + **F4** x2			**G** 3x14MM 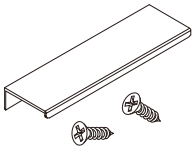 x6	**H** 5x71MM 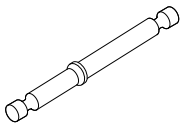 x2
I 350MM 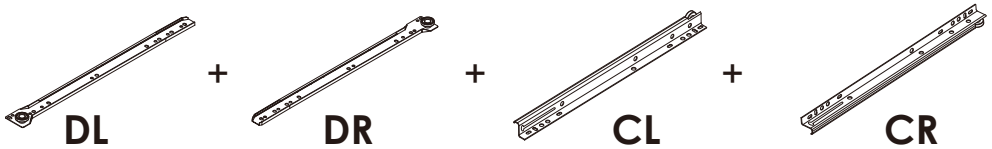 **DL** + **DR** + **CL** + **CR** x6				**J** 6x20MM 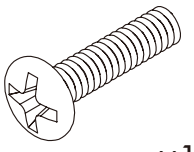 x10
K x5	**L** 3x16MM 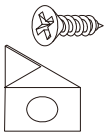 x16			

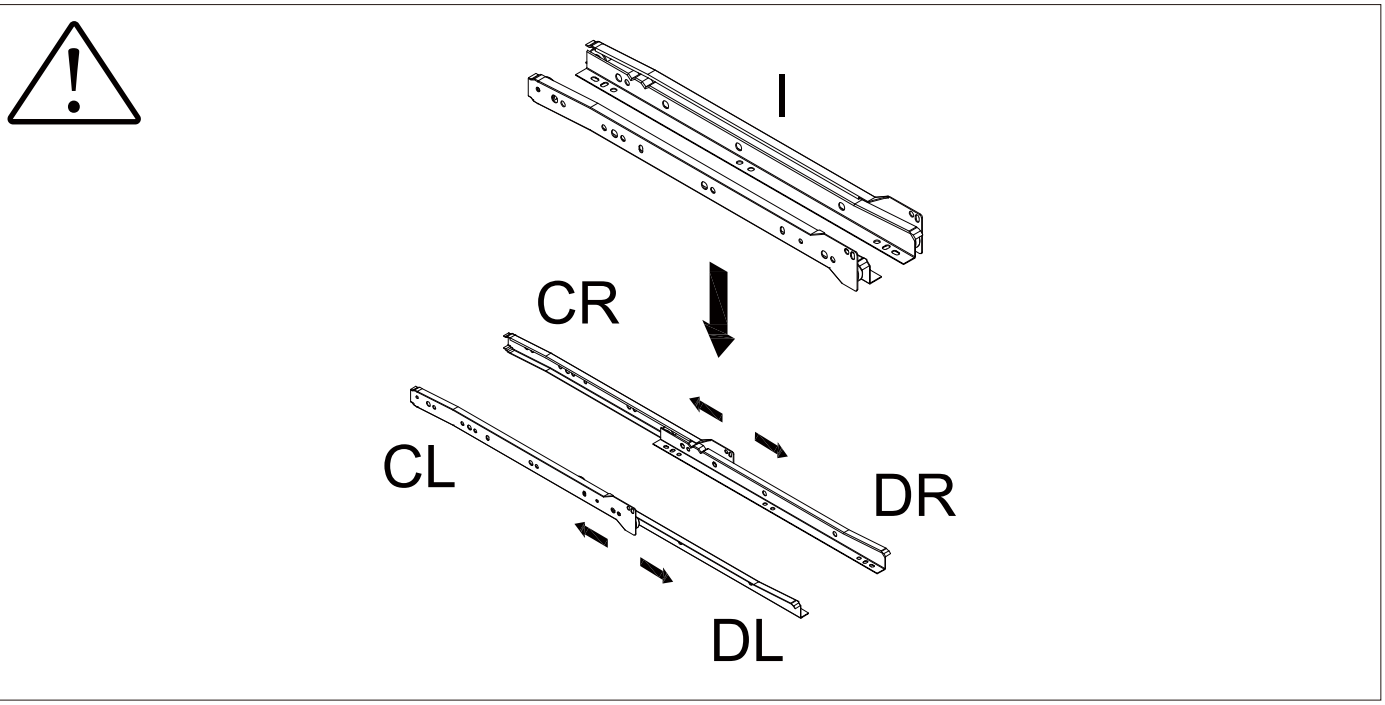

A x4

E x18

CL x3

CR x3

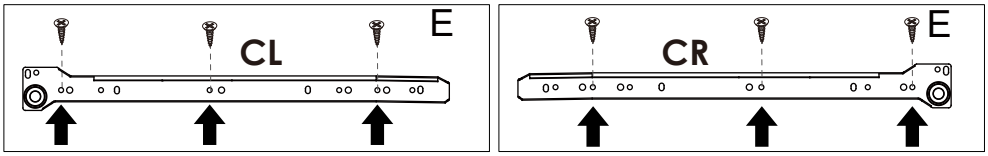

1

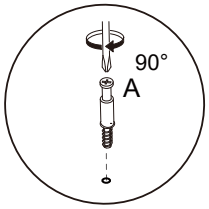

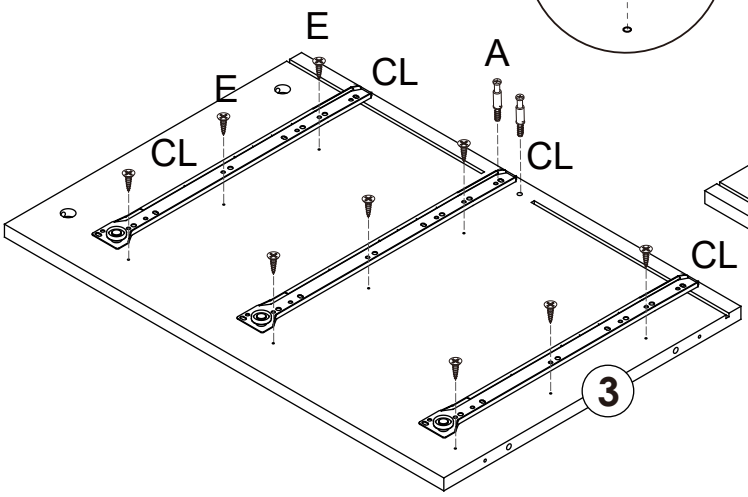

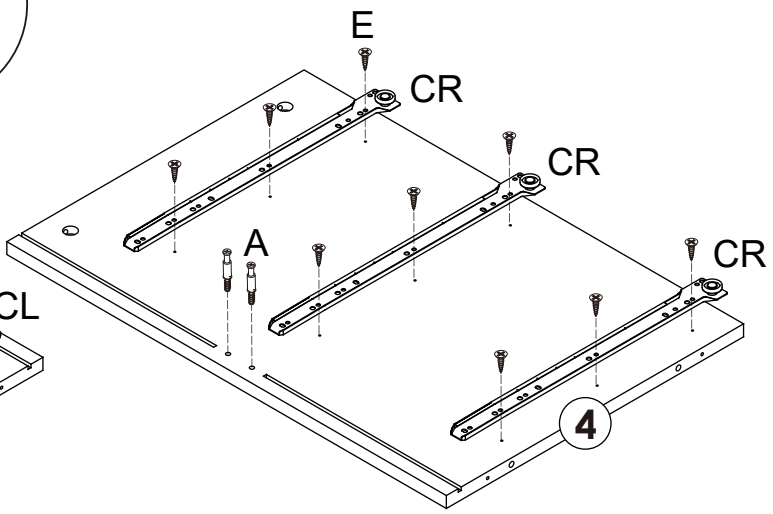

Insert 4x bolts (A) into panels [3] and [4]. Tighten with a screwdriver.
Attach 3x slide rails (CL) to panel [3] and secure with 9x screws (E).
Attach 3x slide rails (CR) to panel [4] and secure with 9x screws (E).
Tighten with a screwdriver.

E x18

CL x3

CR x3

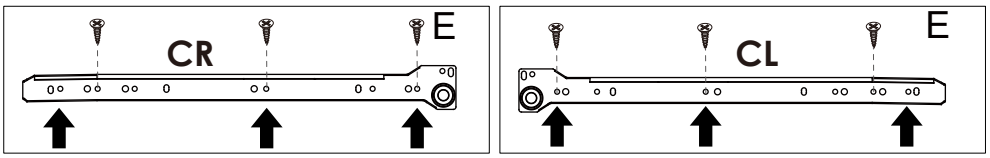

2

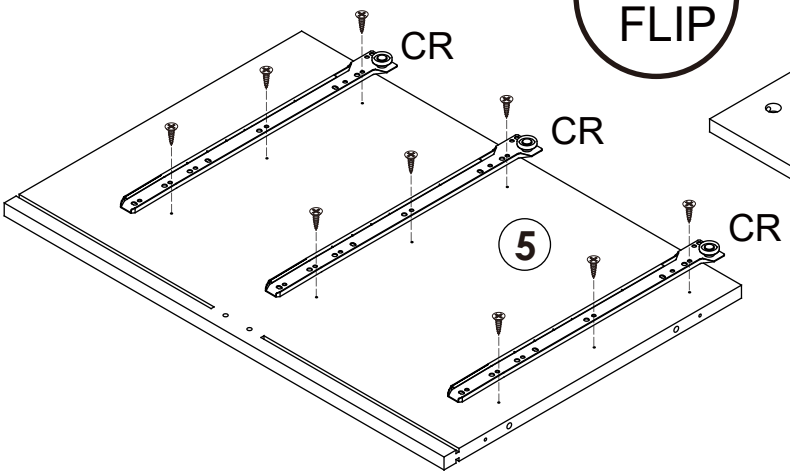

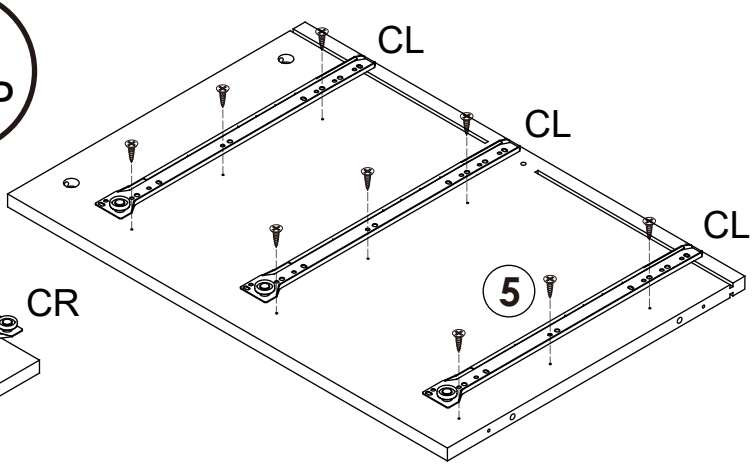

Attach 3x slide rails (CL) and 3x slide rails (CR) to panel [5] as shwon.
secure with 18x screws (E). Tighten with a screwdriver.

B x4

H x2

3

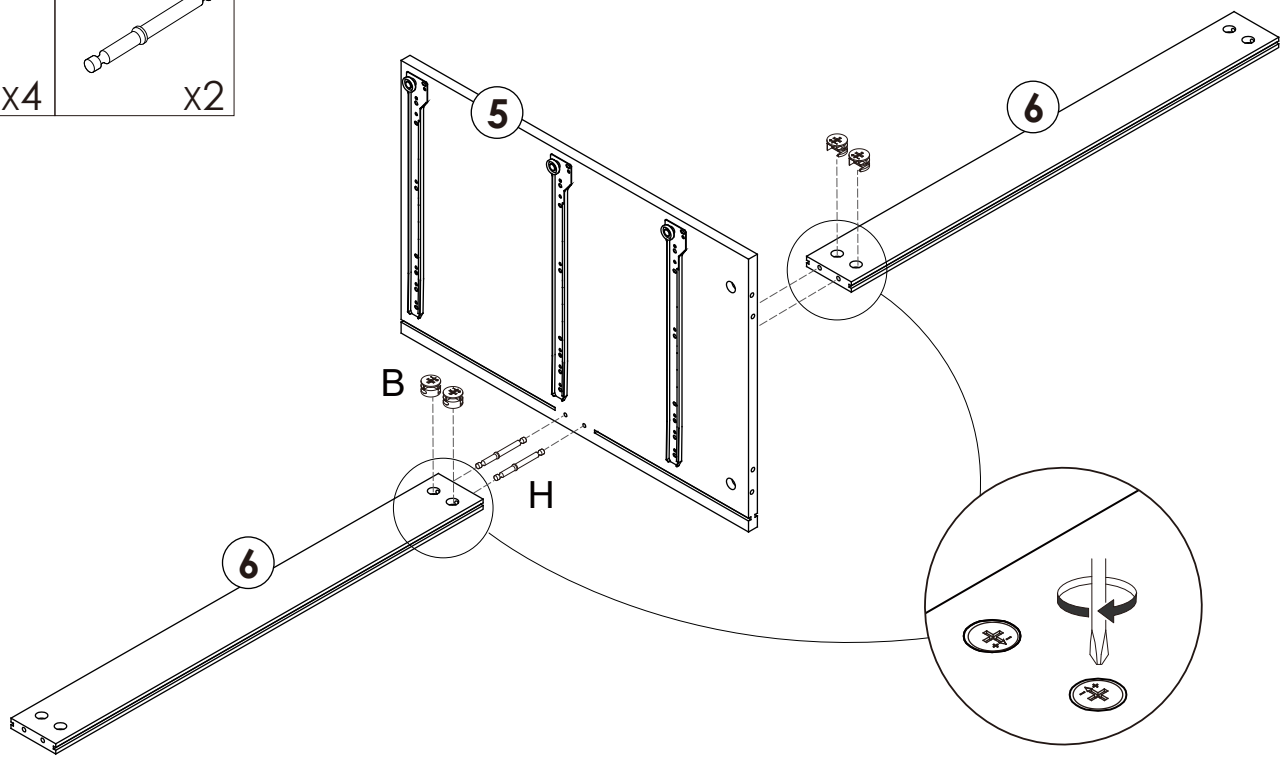

Attach panels [6] to panel [5] secure with 4x locking nuts (B). Tighten with a screwdriver. After installing the eccentric wheel, it needs to be rotated and locked again.

B x4

4

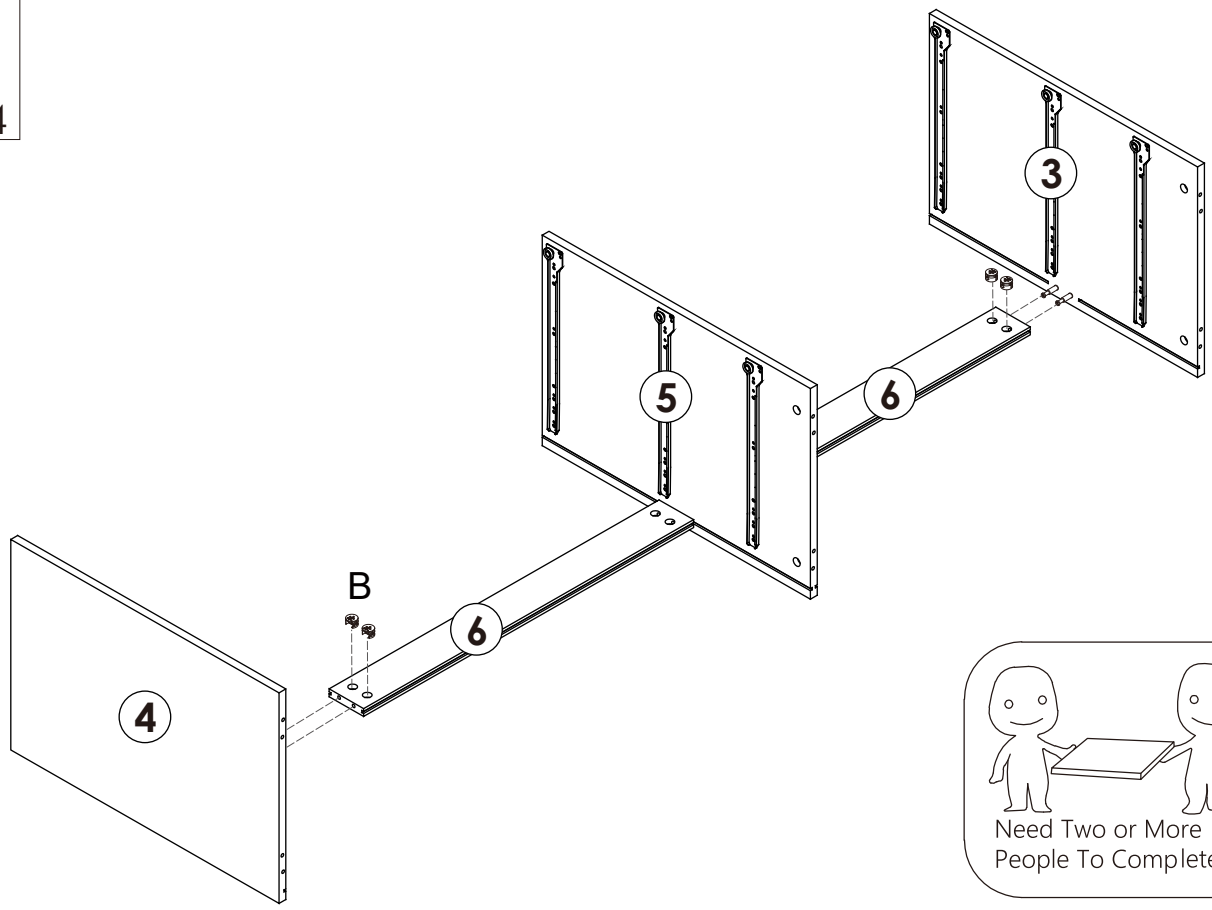

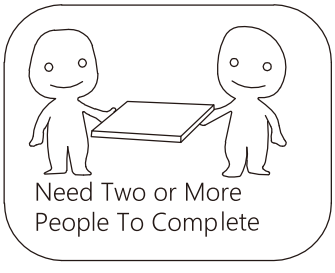

Insert 4 x Cam Nuts (B) into 2 X Rails [6]. Rotate the cam nuts so the arrows point towards the incoming bolts. Attach Side Panels [3 & 4] to 2 X Rails [6] by tightening all nuts with the Phillips Head Screwdriver.

5

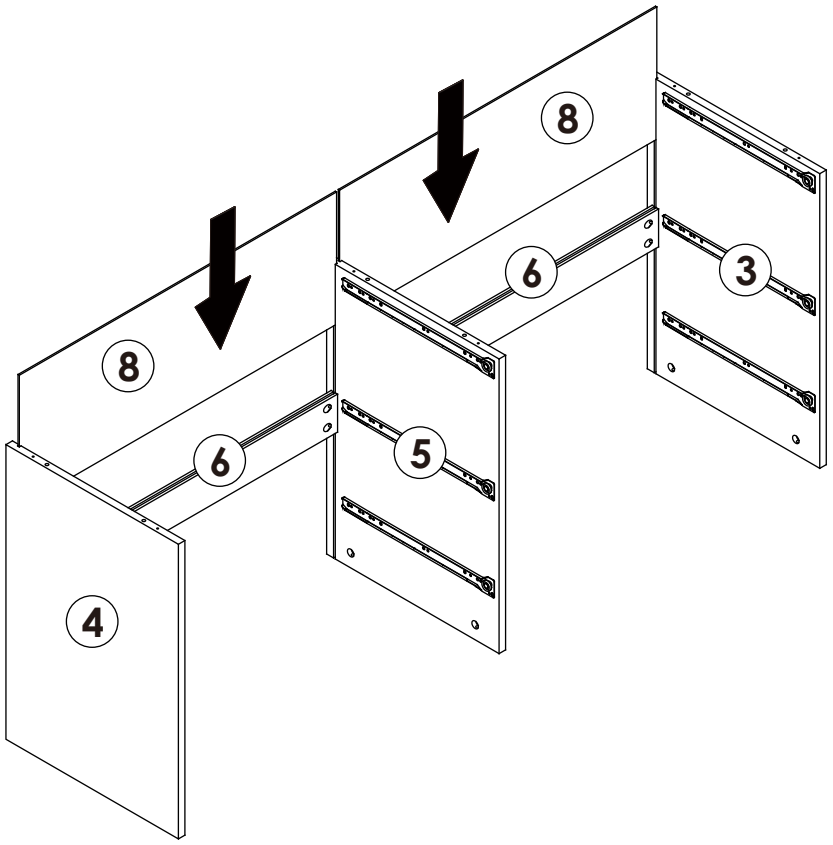

Insert Back Panels [8] into the grooves of Panels [3 & 4 & 5].

6

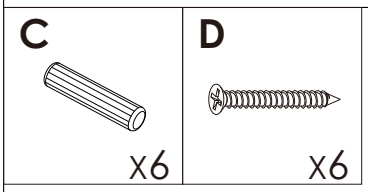

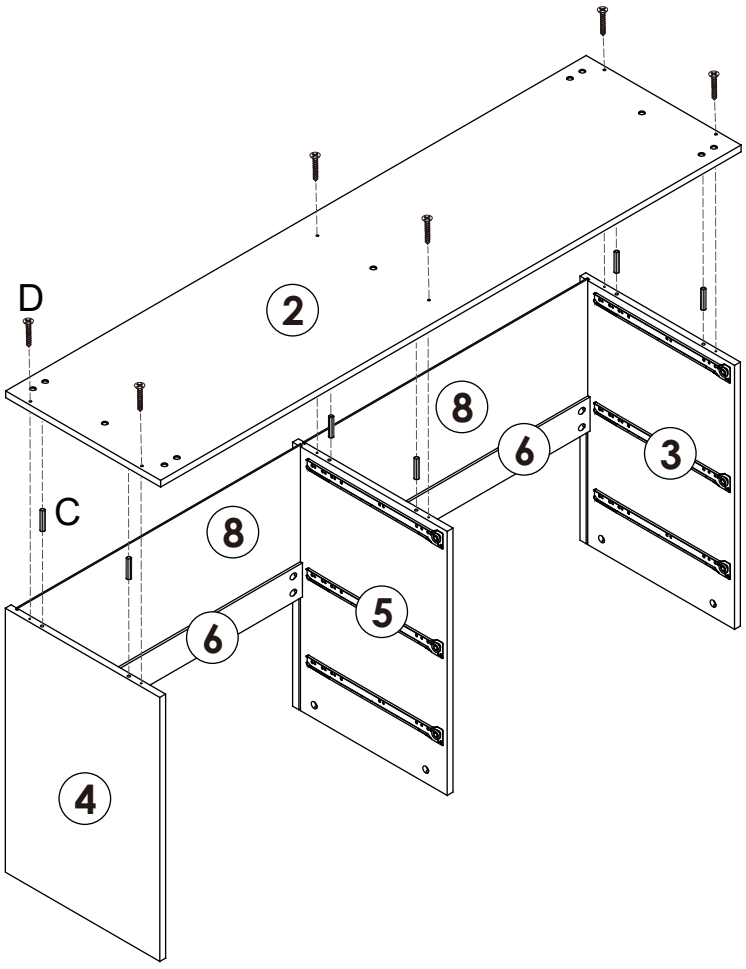

Attach Bottom Panel [2] to Side Panels [3 & 4] and Divider [5] with Insert 6 x Dowels (C) into Side Panels [3, 4] and Divider [5].
6 x Long Screws (D). Tighten with a screwdriver.

7

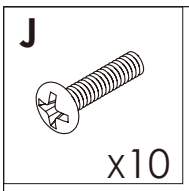

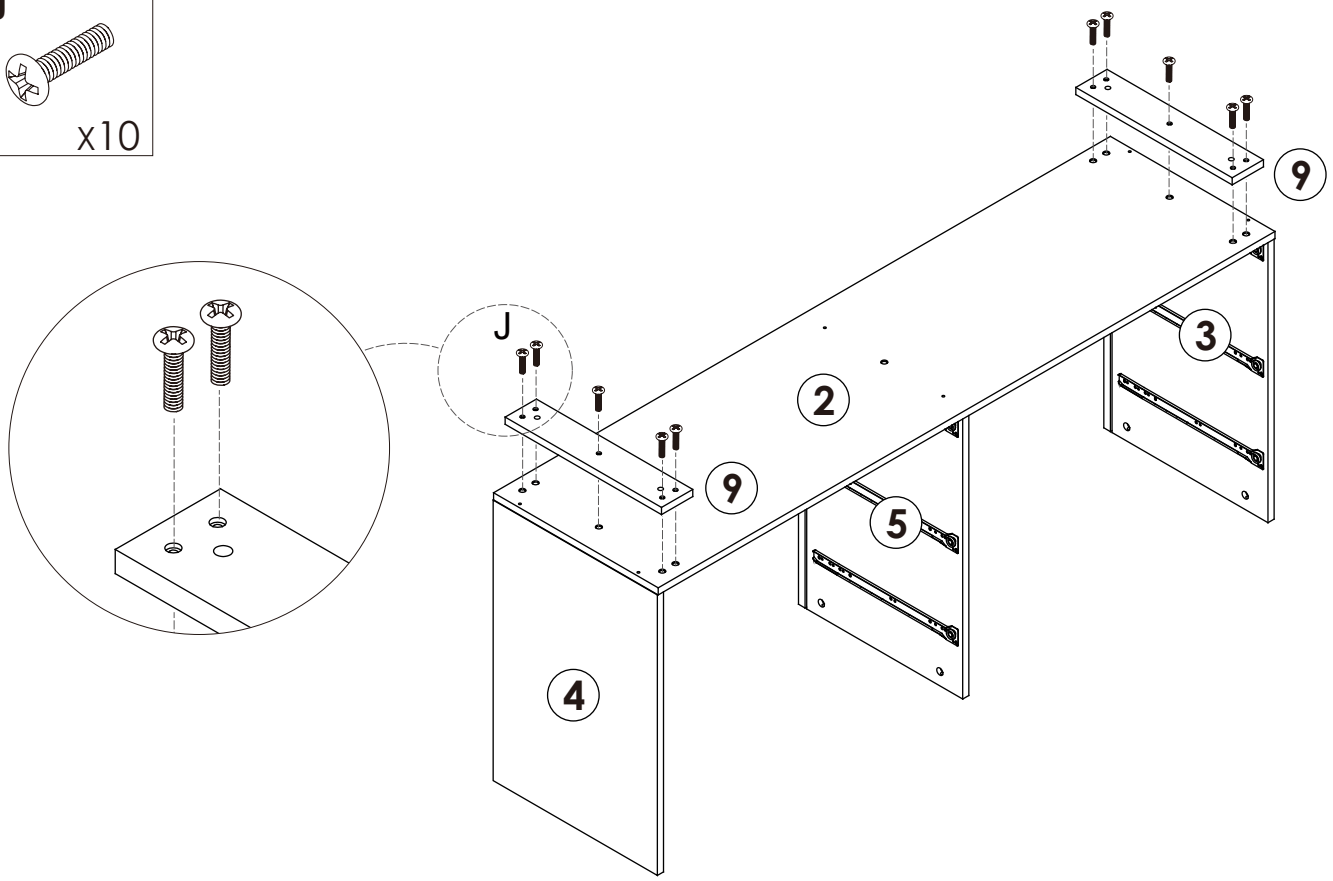

Attach Panel [9] to Bottom Panels [2] ,10 x Cross screw (J). Tighten with a screwdriver.

8

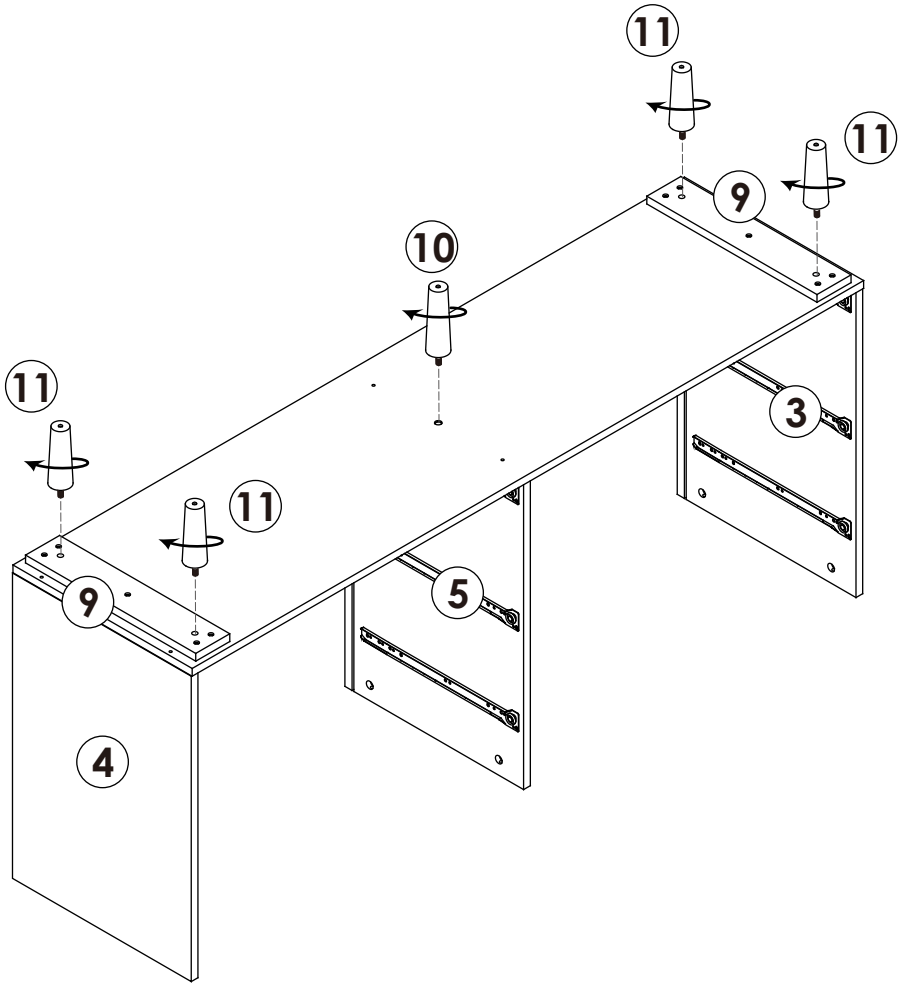

Insert 5 x LegS [10&11] into end of Bottom panel [2] as shown.

K

x5

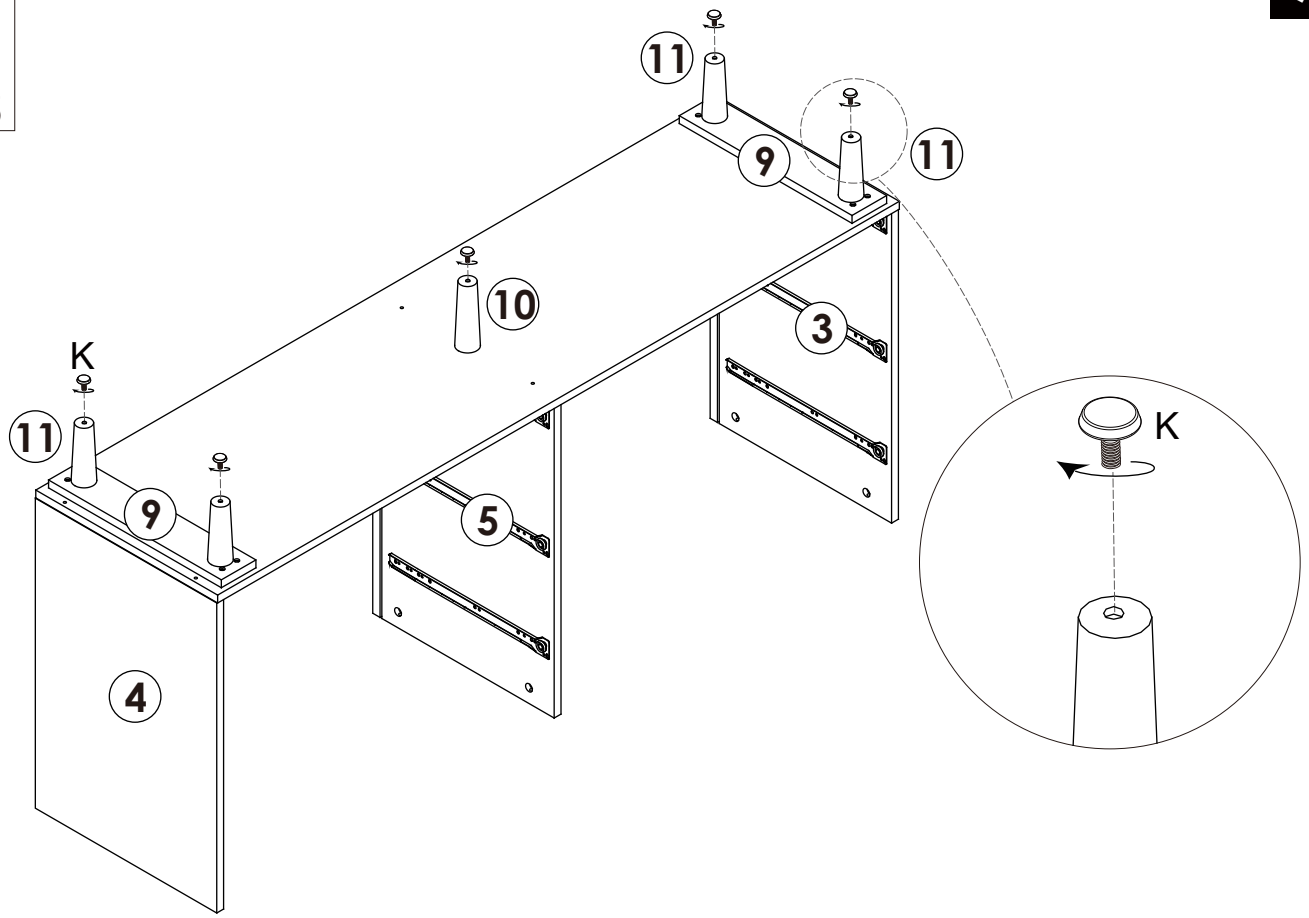

Insert 5 x adjuster (K) into end of Leg [10&11] as shown.

Turn Over

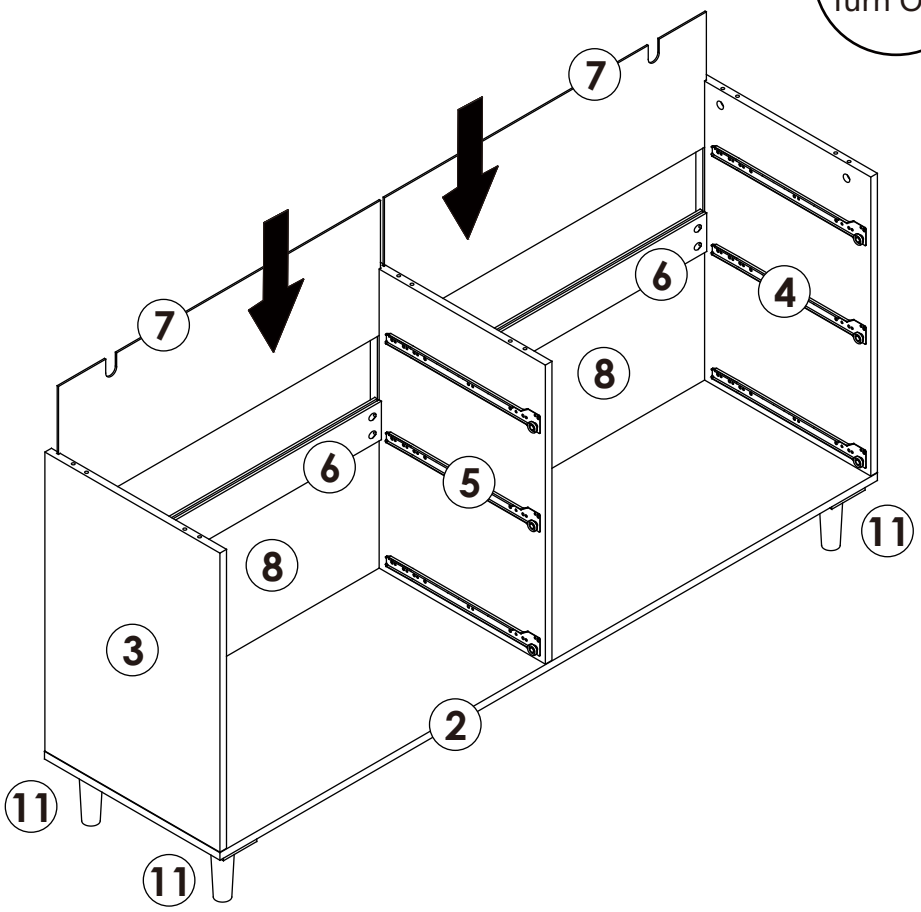

Insert Back Panels [7] into the grooves of Panels [3 & 4 & 5].

11

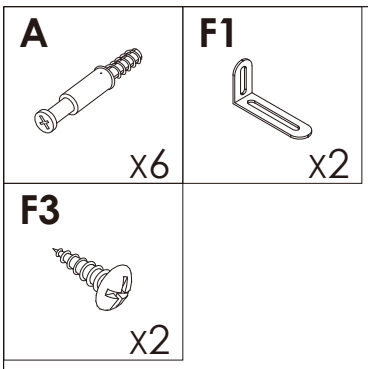

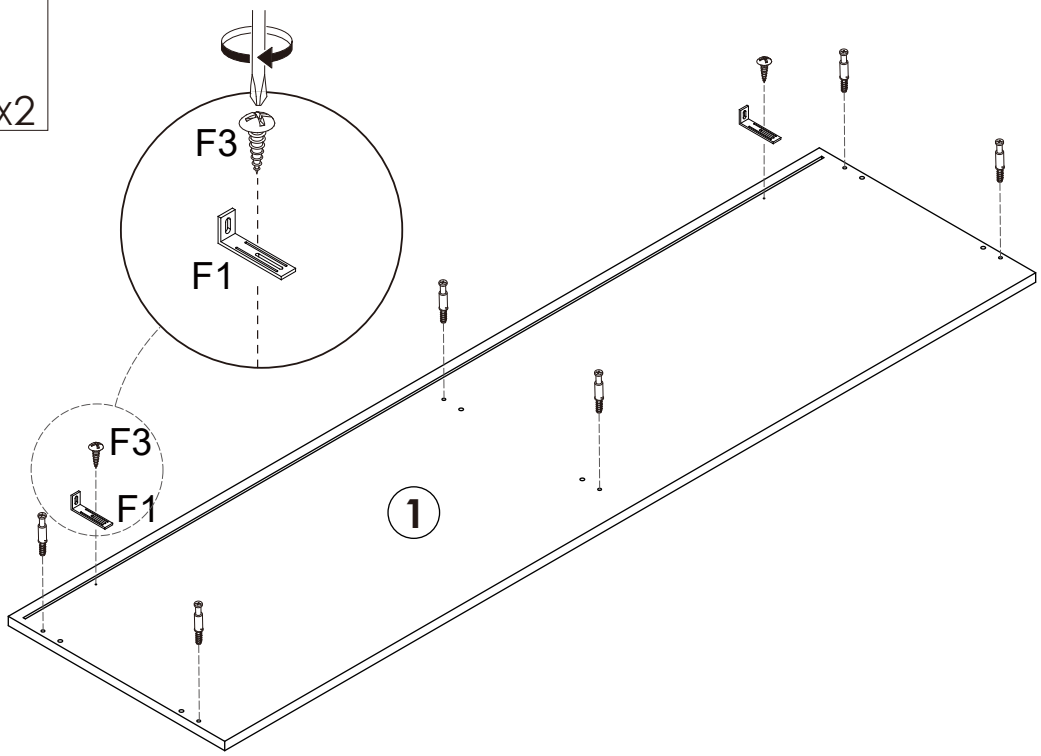

Attach 2 x Bracket (F1) to Top Panel [1] with 2 x screws (F3) as shown.
Insert 6 x Cam Bolts (A) into Top Panel [1]. Tighten with a Phillips Head Screwdriver.

12

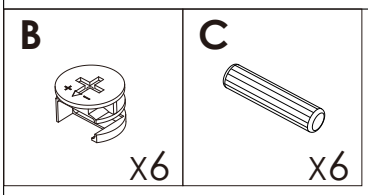

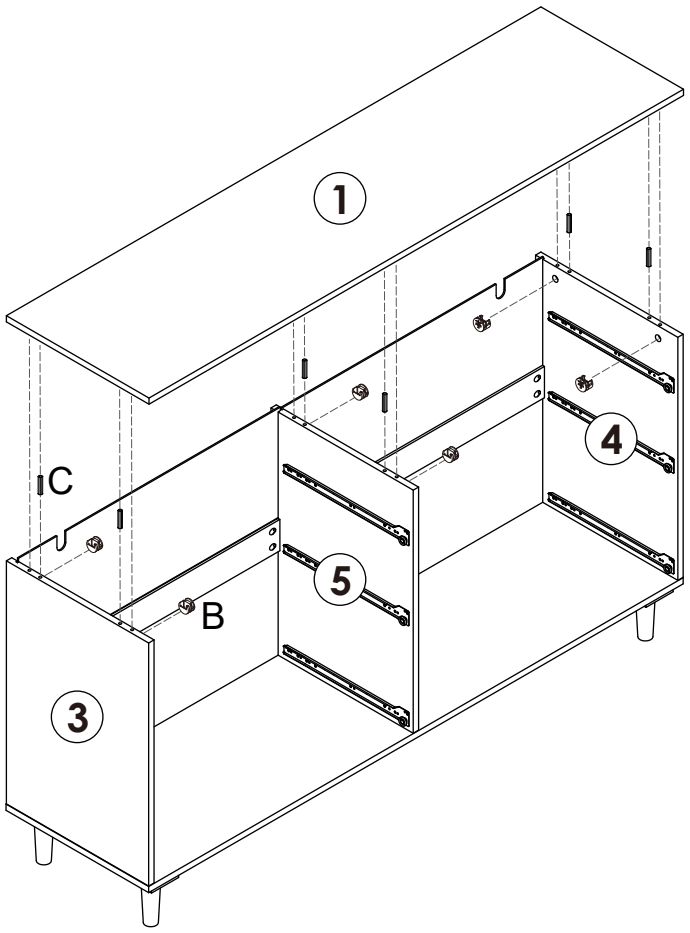

Insert 6 x Dowels (C) into Side Panels [3, 4] and Divider [5].
Insert 6 x Cam Nuts (B) into the holes of Side Panels [3, 4] and Divider [5].
Rotate the cam nuts so the arrows point towards the incoming cam bolts. Attach Top Panel [1] and tighten the cam nuts.

L

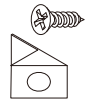

x16

Lock hardware (L) at the Edge of board.
Hold the door panels down by hand before installing it.

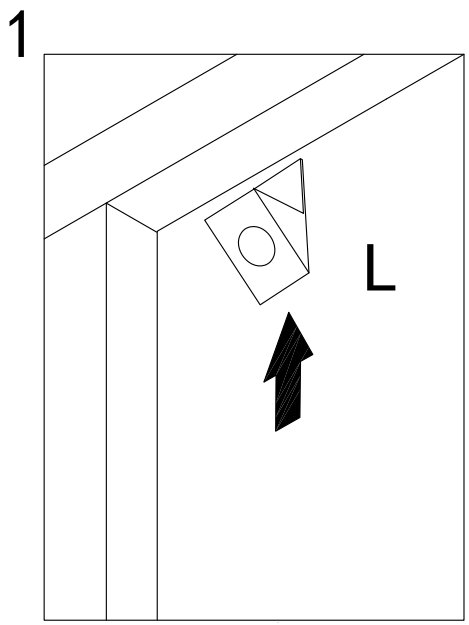

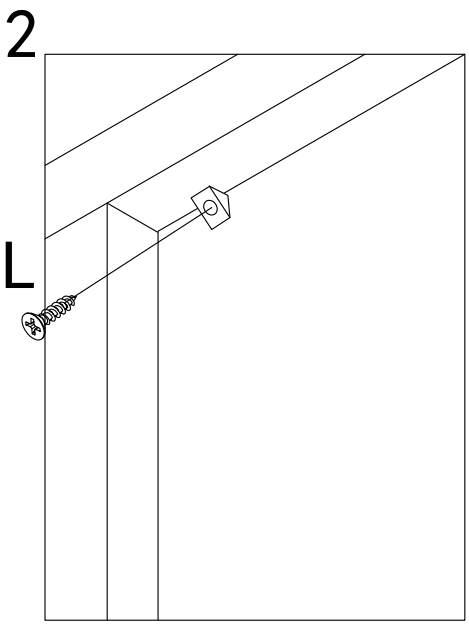

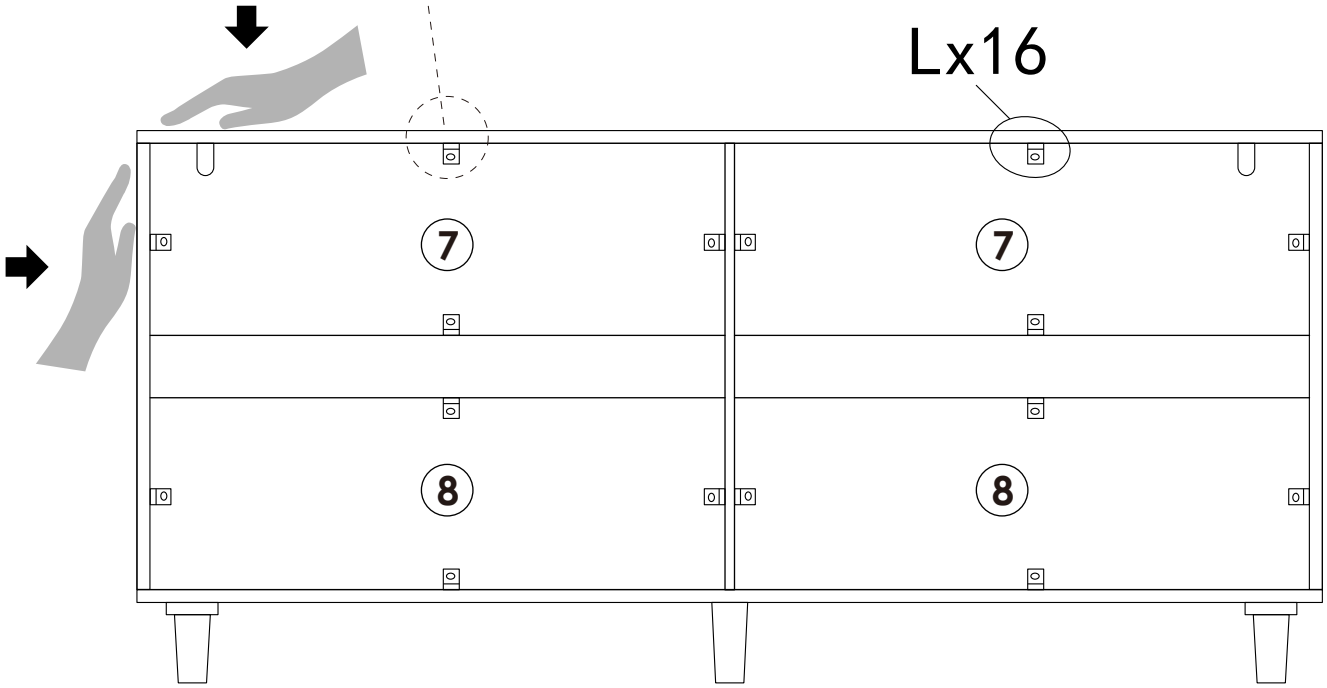

F2	F4
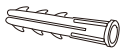 x2	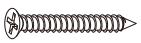 x2

step 1.Mark the position on the wall.
step 2.Drill and insert the expandable screw (F2) by hammer.
step 3.Use screw (F4) to attach it and tighten by screwdriver.

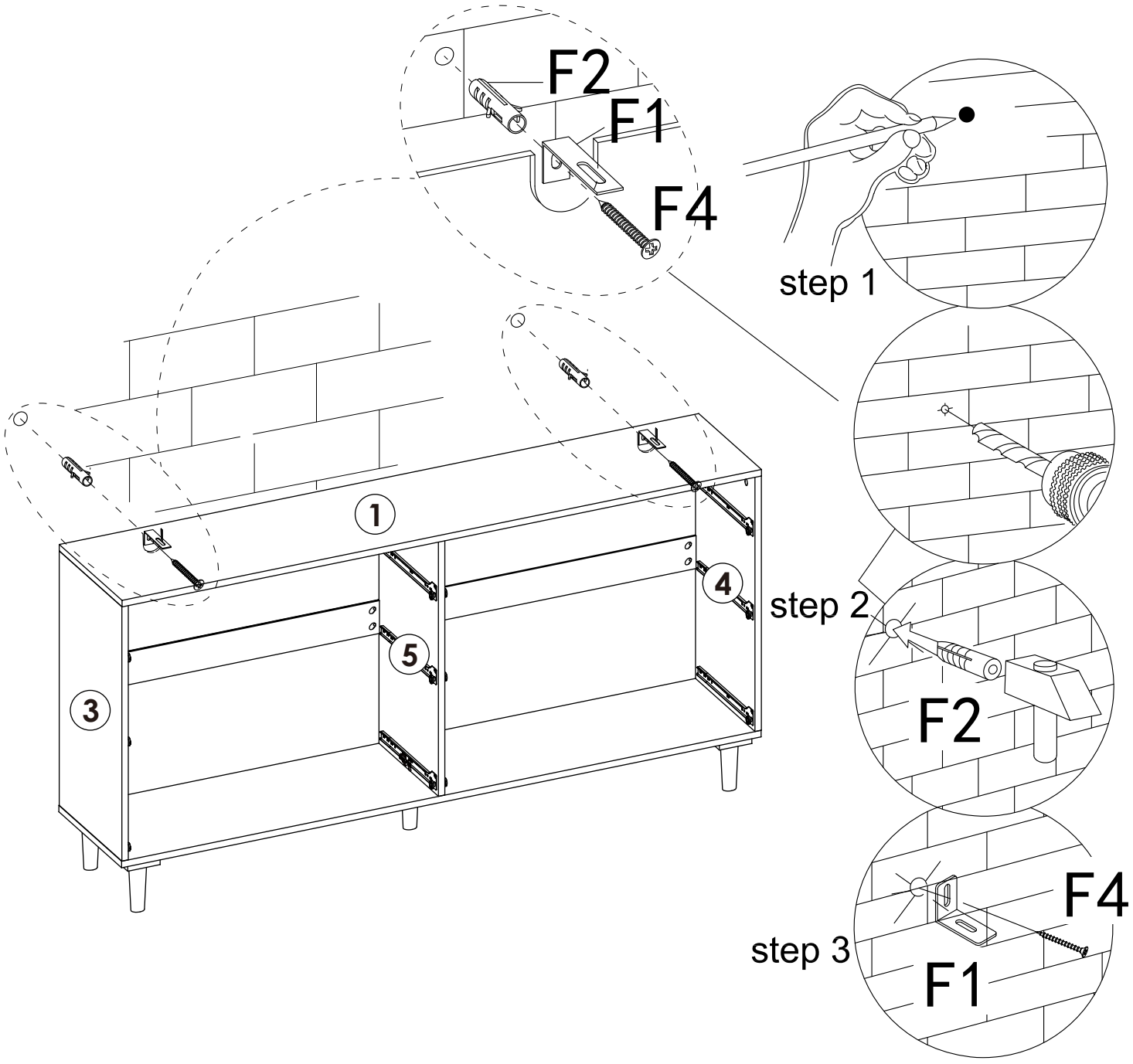

If it is a solid wall, please use expansion and self-tapping screws to secure the cabinet to the wall, if it is a wooden wall, only use self-tapping screws. Please dont overtighten screws.

15

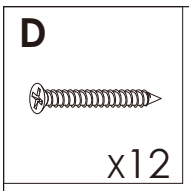

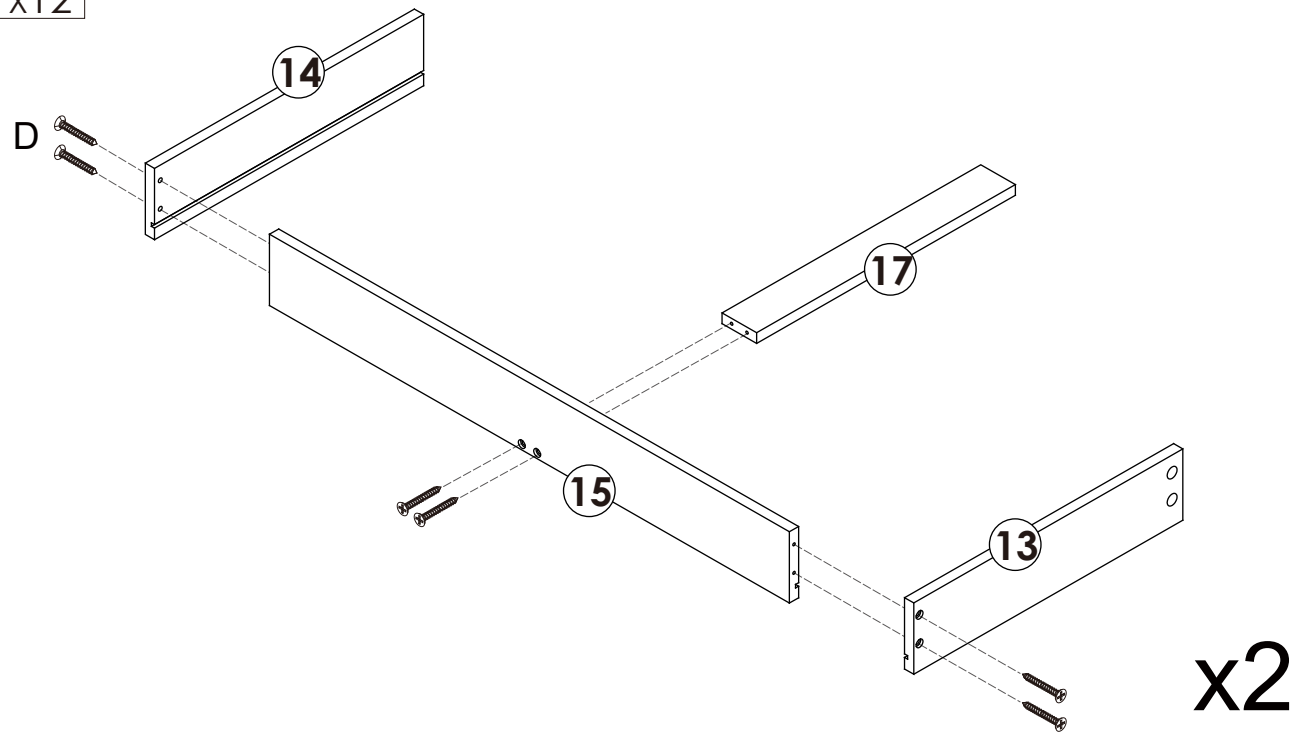

Attach panels [13], [14] and [17] to panel [15] secure with 12x screws (D).
Tighten with a screwdriver

16

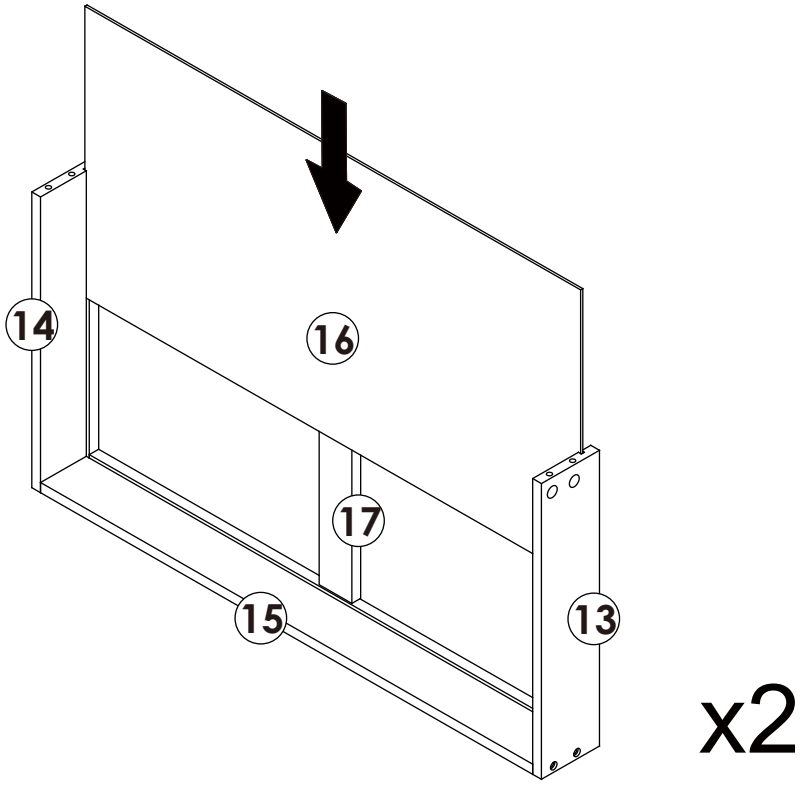

Slide panel [16] down along the grooves between the panels [13] and [14] as shown.

17

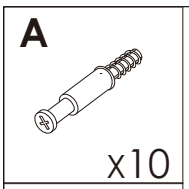

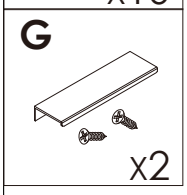

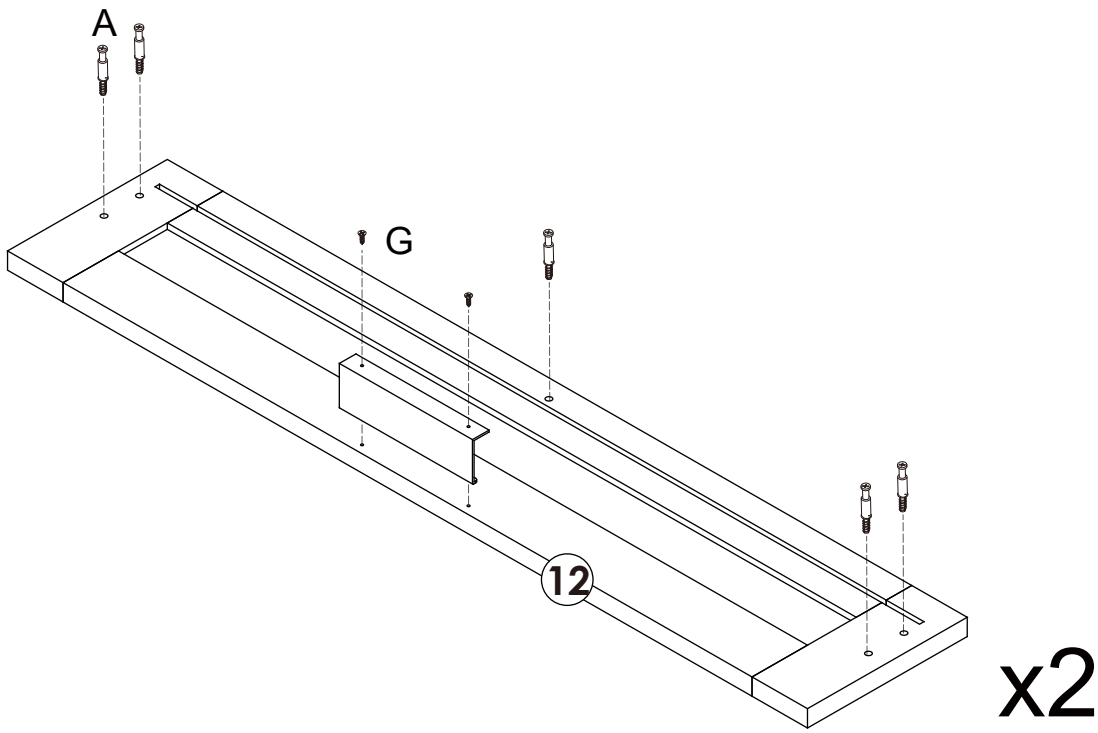

Insert 10x bolts (A) into panels[12]. Tighten with a screwdriver.
Attach handles (G) to panels [12] secure with 4x handle bolts (G). Tighten with a screwdriver.

18

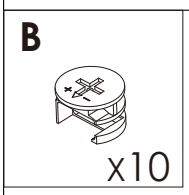

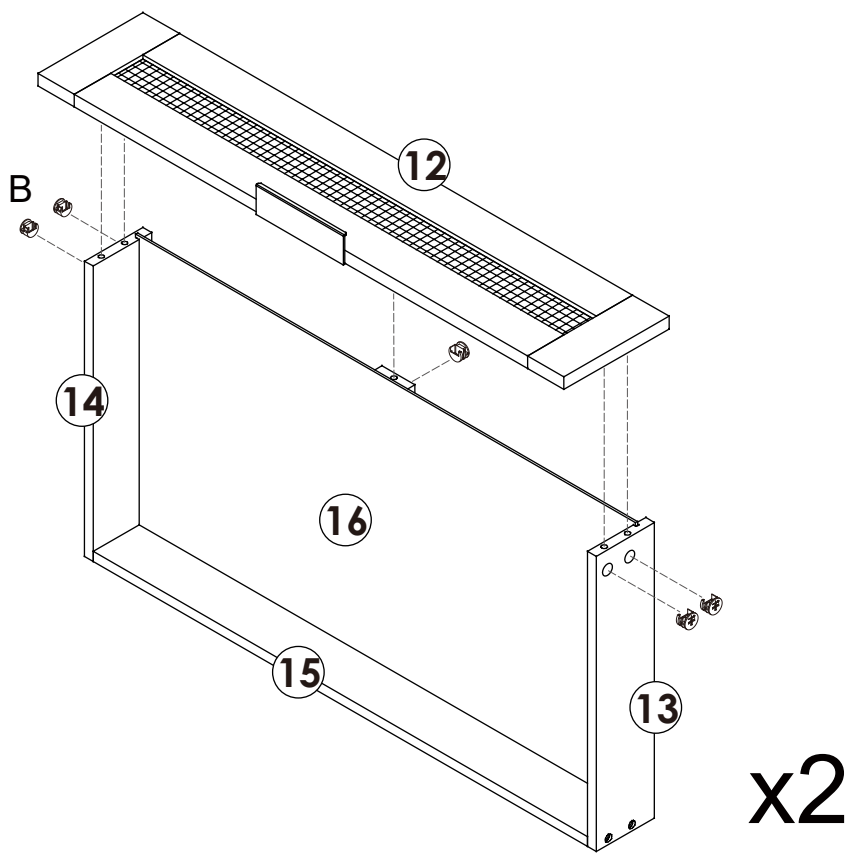

Attach panels [12] to panels [13], [14]and [17]
secure with 10x locking nuts (B).Tighten with a screwdriver

19

D

x12

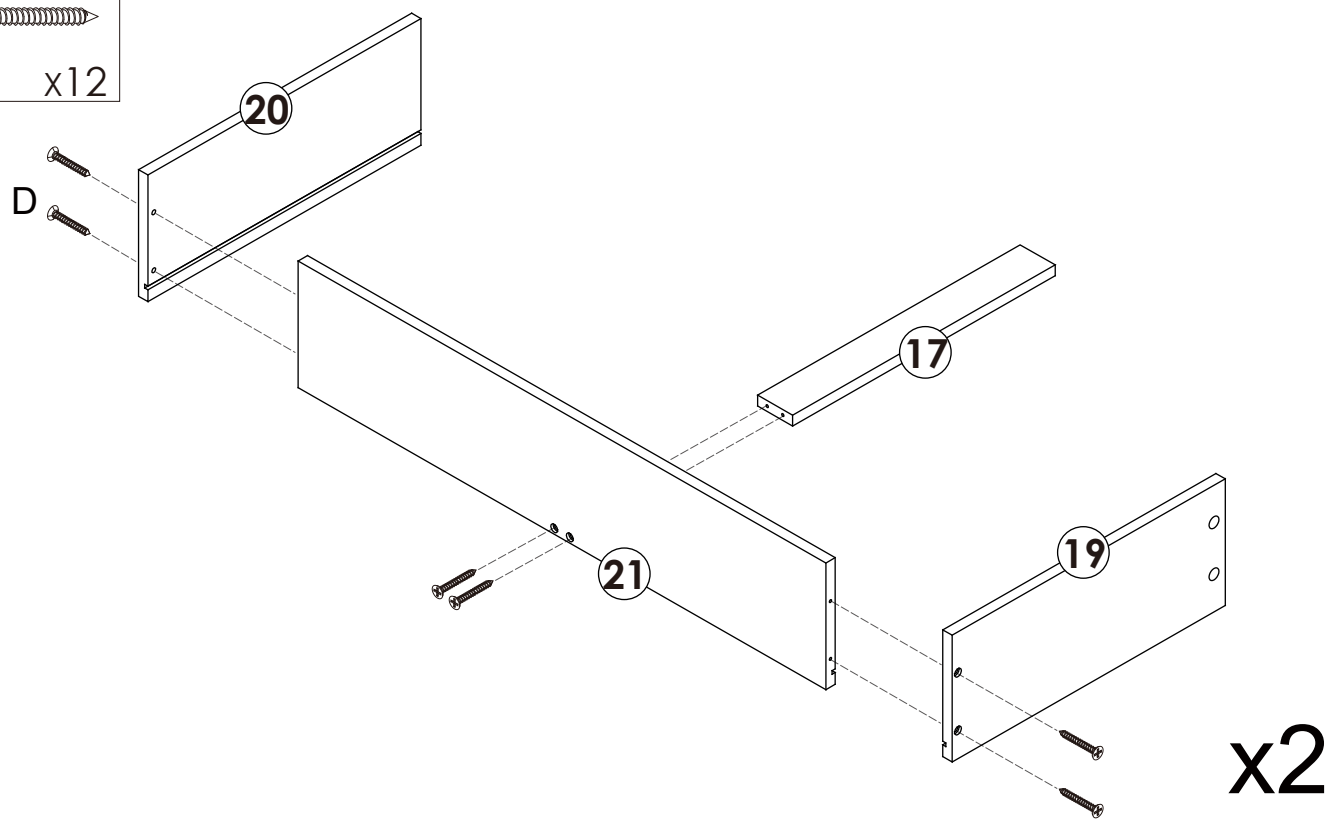

x2

Attach panels [19], [20] and [17] to panel [21] secure with 12x screws (D).
Tighten with a screwdriver

20

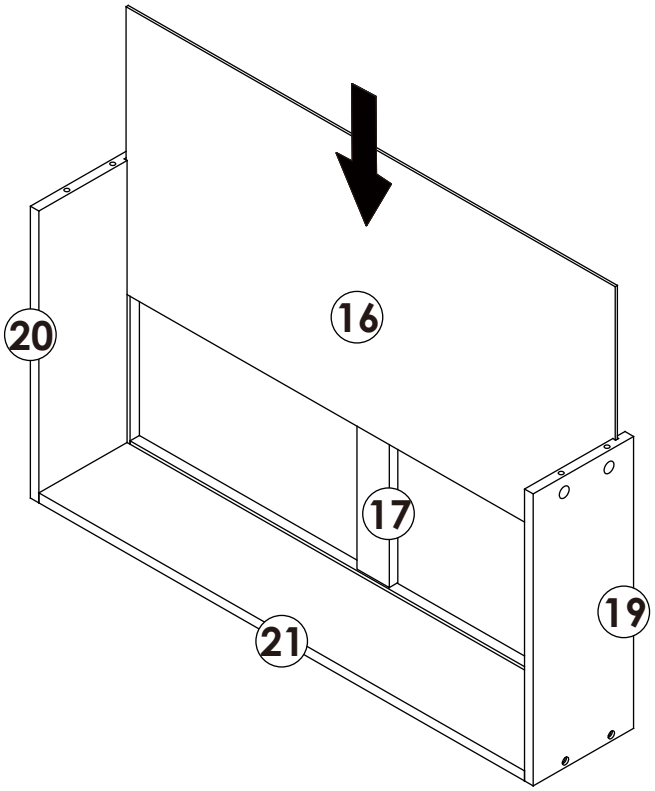

x2

Slide panel [16] down along the grooves between the panels [19] and [20] as shown.

A

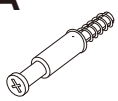

x10

G

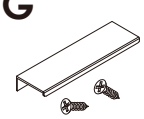

x2

21

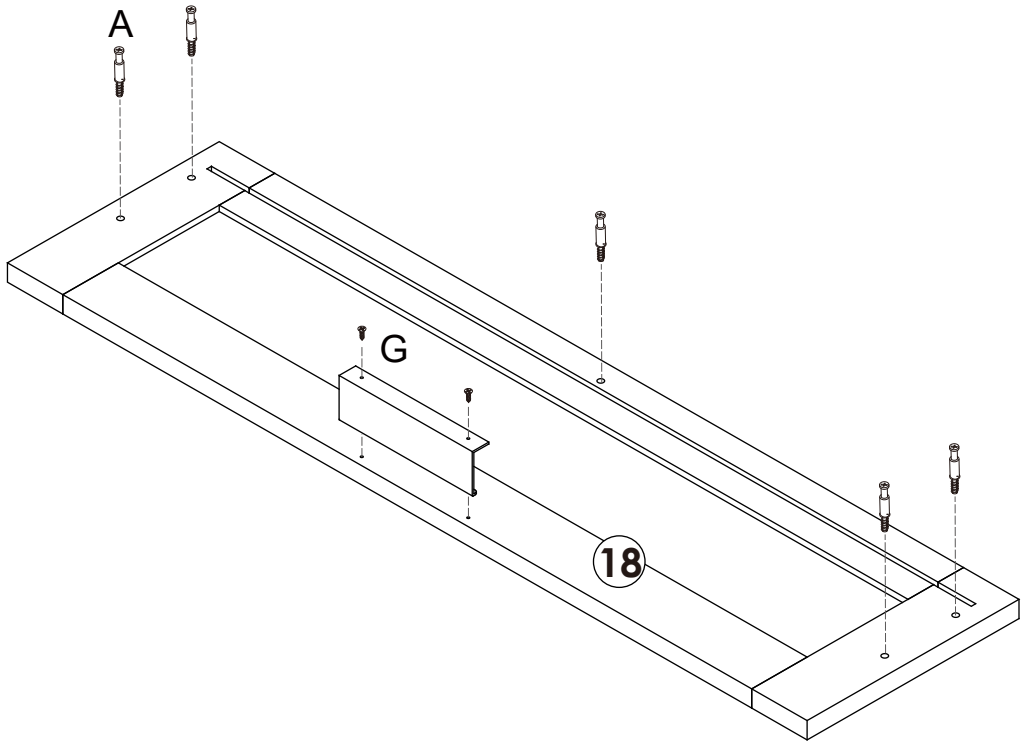

x2

Insert 10x bolts (A) into panels[18]. Tighten with a screwdriver.
Attach handles (G) to panels [18] secure with 4x handle bolts (G). Tighten with a screwdriver.

B

x10

22

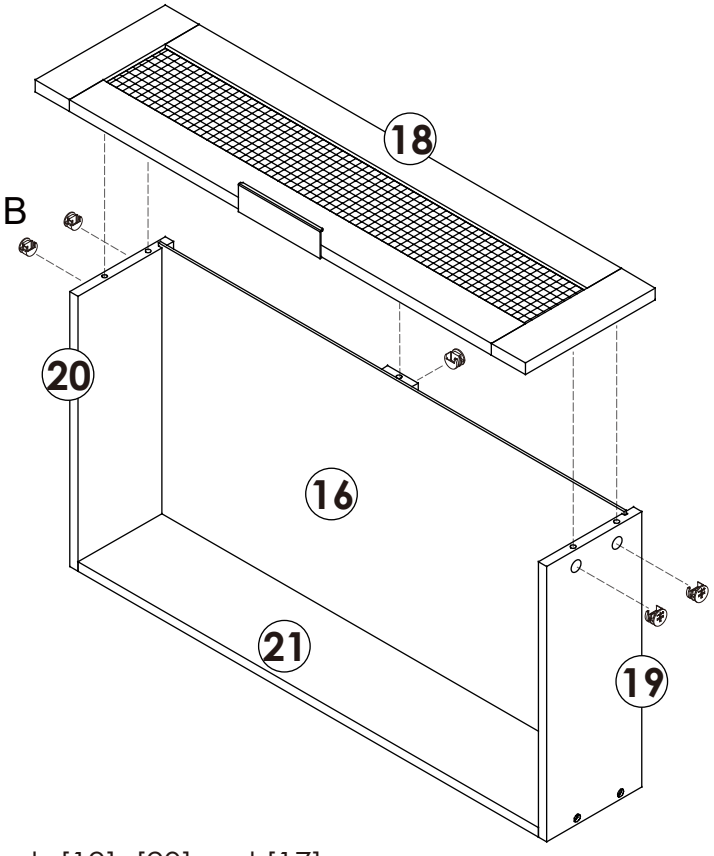

x2

Attach panels [18] to panels [19], [20]and [17]
secure with 10x locking nuts (B).Tighten with a screwdriver

23

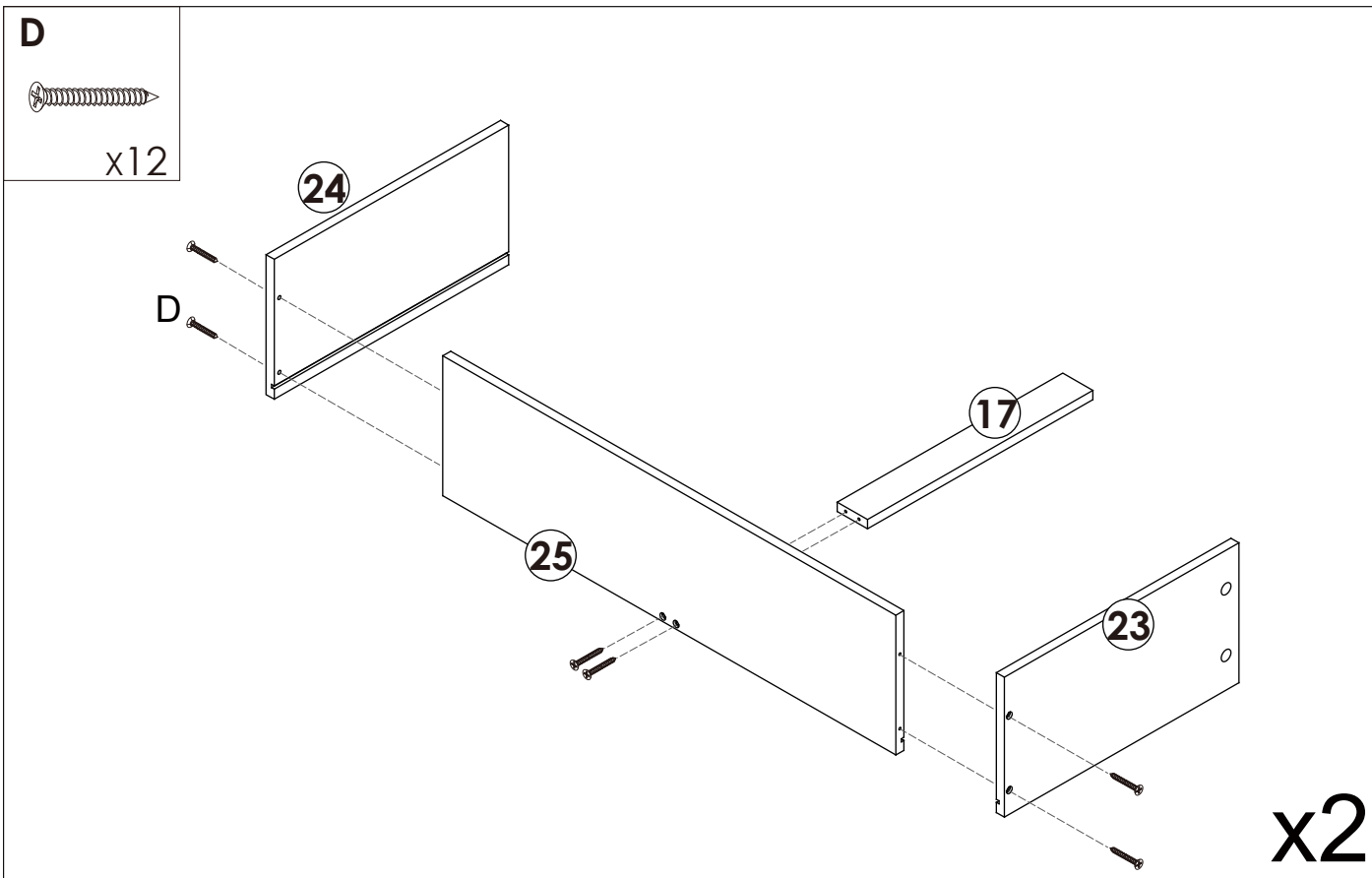

Attach panels [23], [24] and [17] to panel [25] secure with 12x screws (D).
Tighten with a screwdriver

24

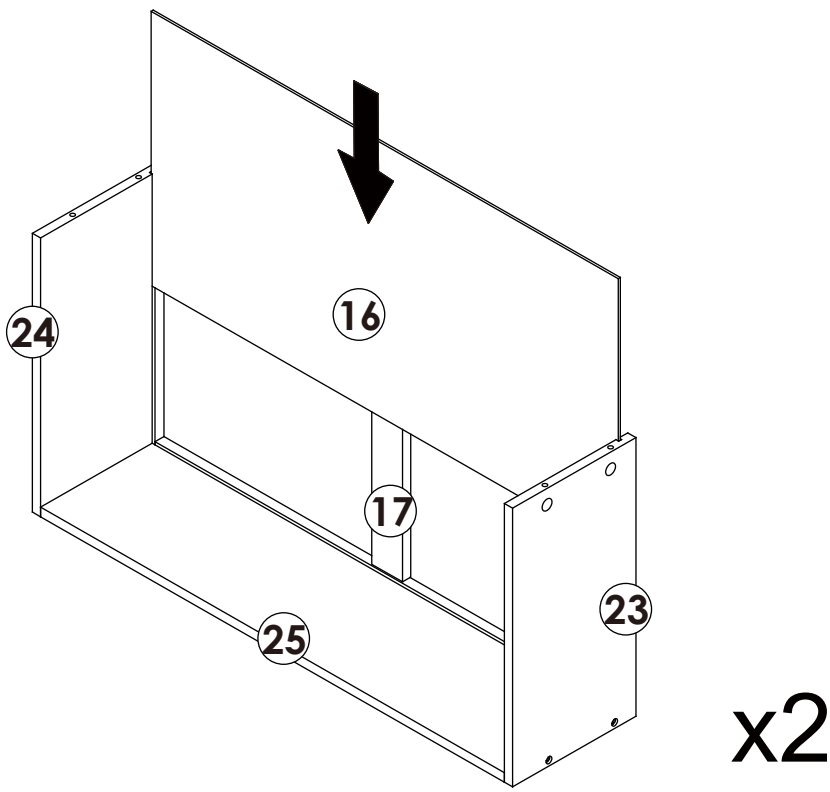

Slide panel [16] down along the grooves between the panels [23] and [24] as shown.

25

A

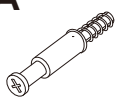

x10

G

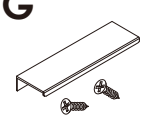

x2

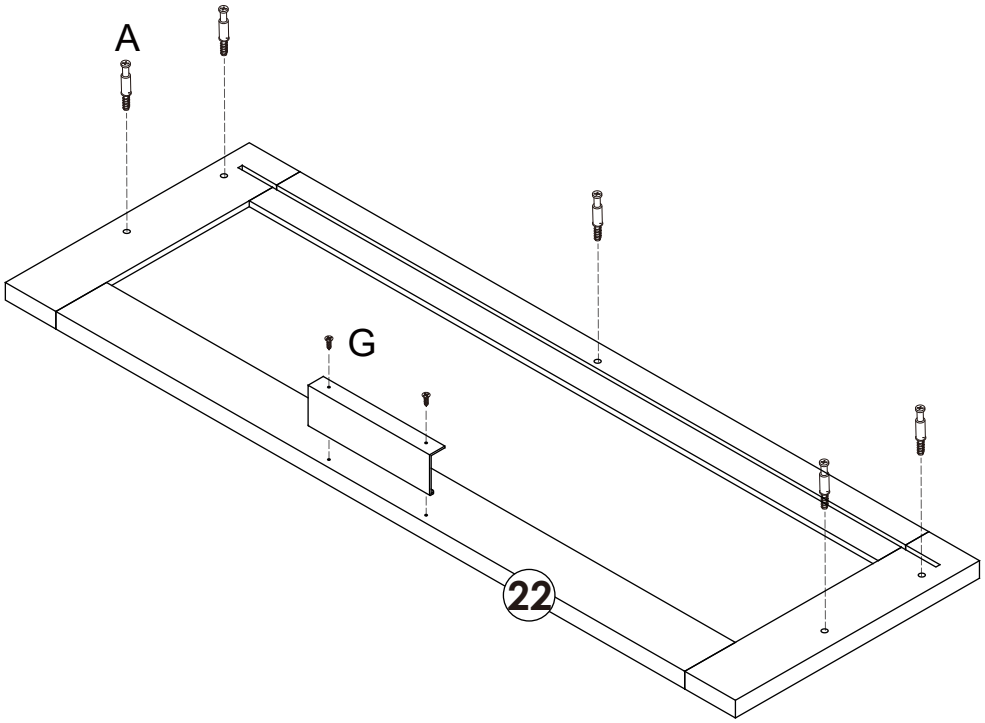

x2

Insert 10x bolts (A) into panels[22]. Tighten with a screwdriver.
Attach handles (G) to panels [22] secure with 4x handle bolts (G). Tighten with a screwdriver.

26

B

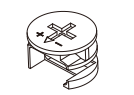

x10

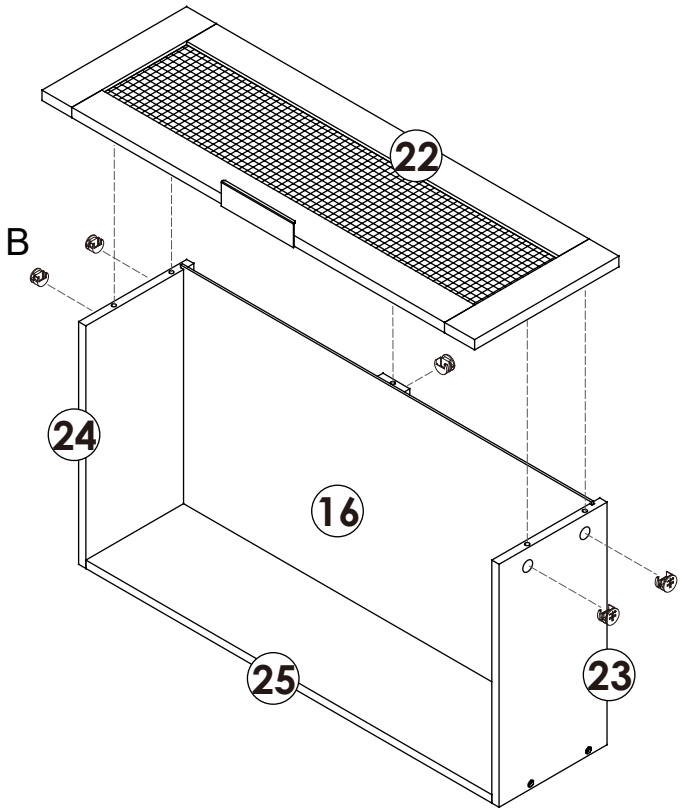

x2

Attach panels [22] to panels [23], [24]and [17]
secure with 10x locking nuts (B).Tighten with a screwdriver

E	DL
x36	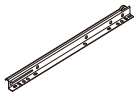 x6
DR	
x6	

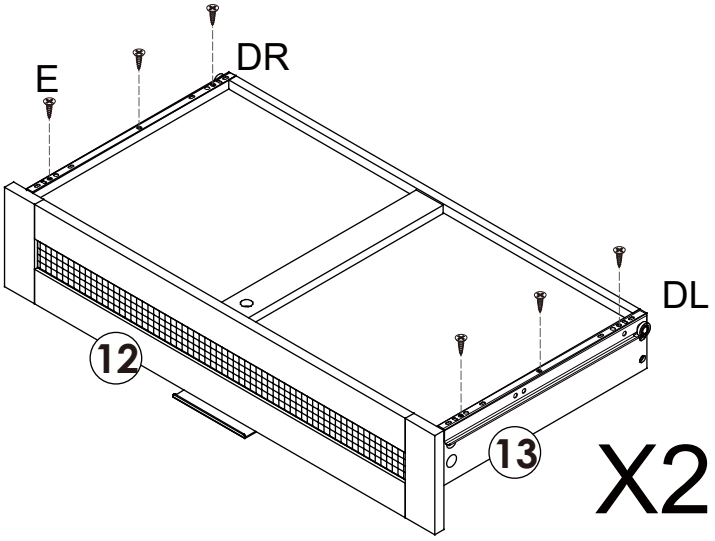

X2

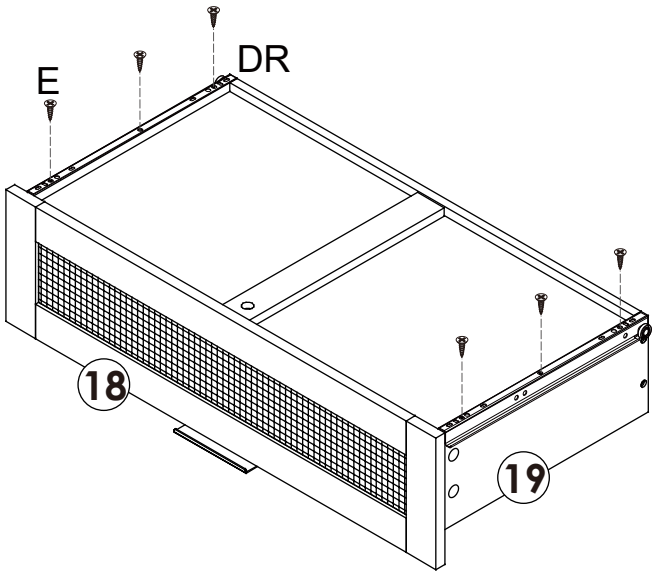

X2

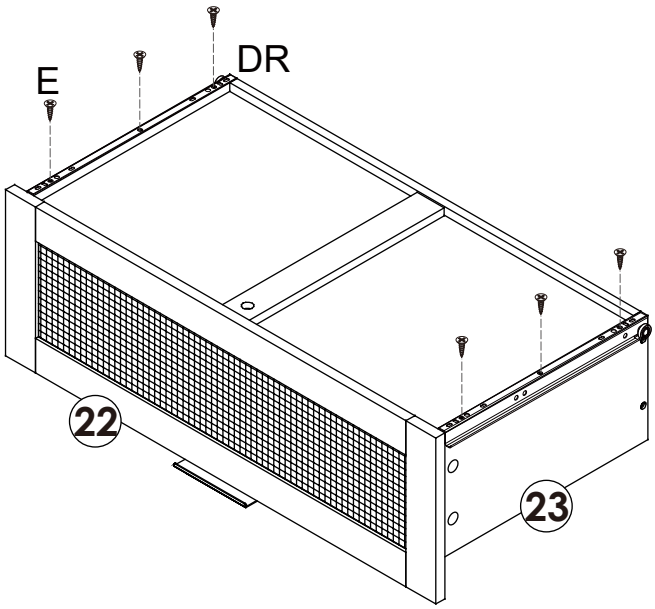

X2

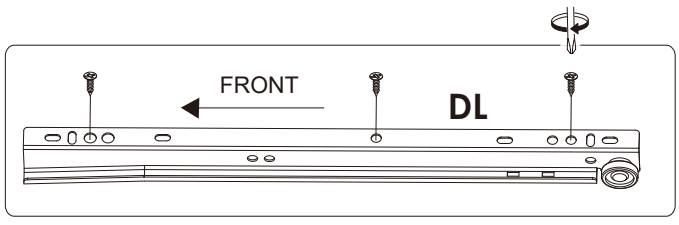

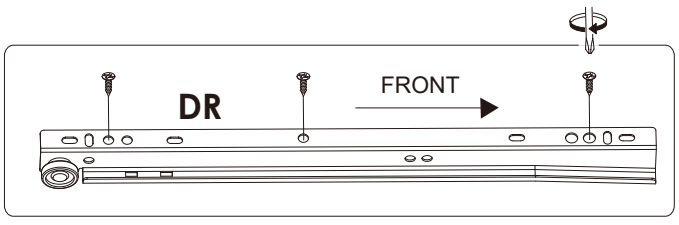

Attach slide rails (DL) and slide rails (DR) to the underside of the side panels as shown.
Secure with 36x screws (E) and tighten with a screwdrive

28

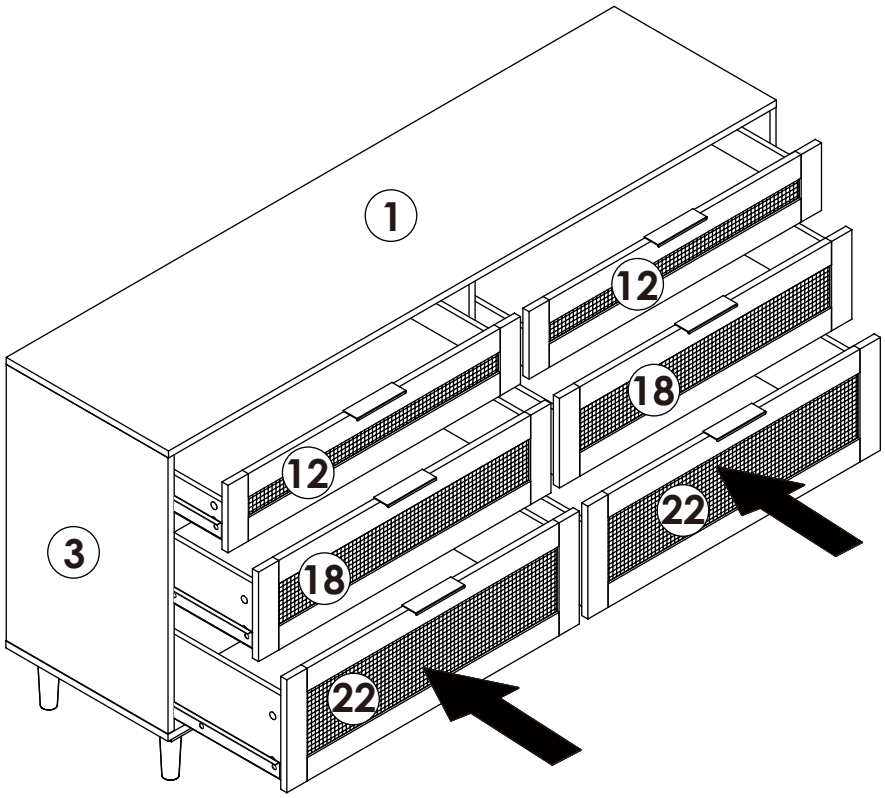

sInsert the assembled drawers into the corresponding compartments as shown. Ensure the drawers slide easily along the rails.

29

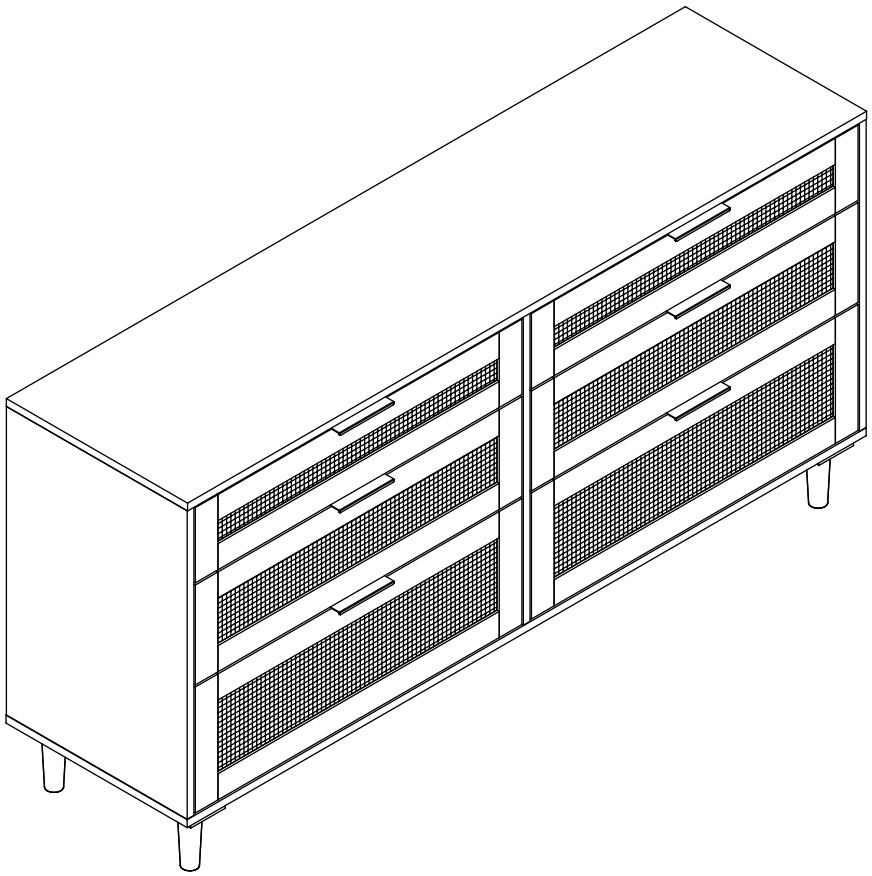

You're done, enjoy!