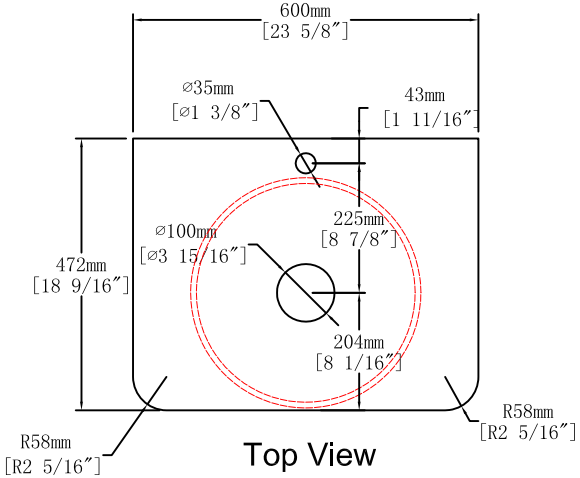

Top View

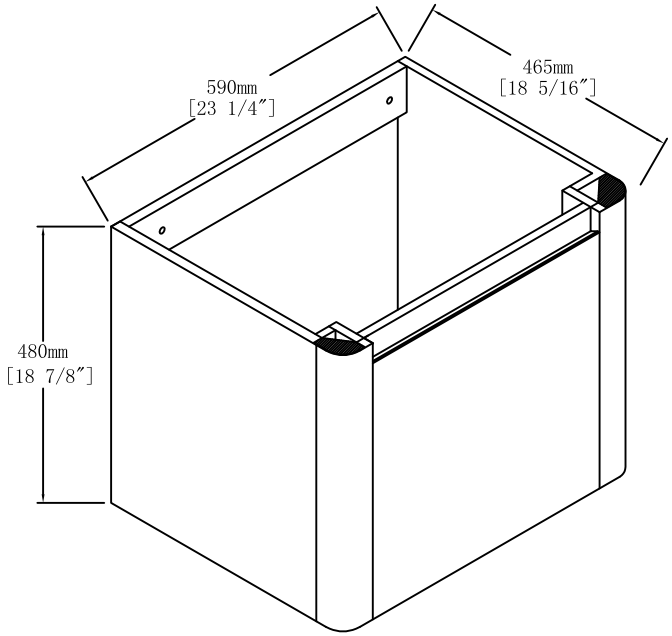

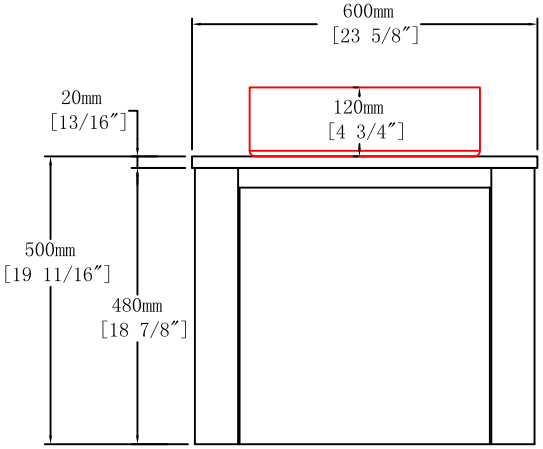

Front View

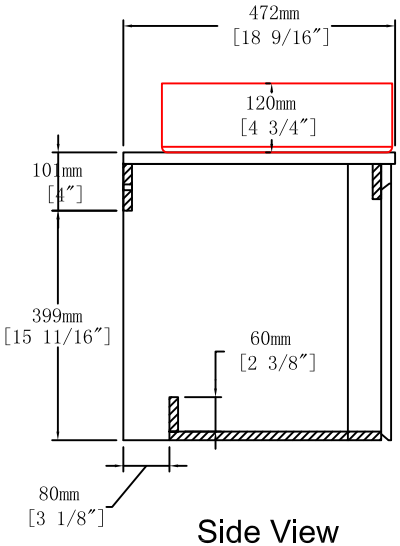

Side View

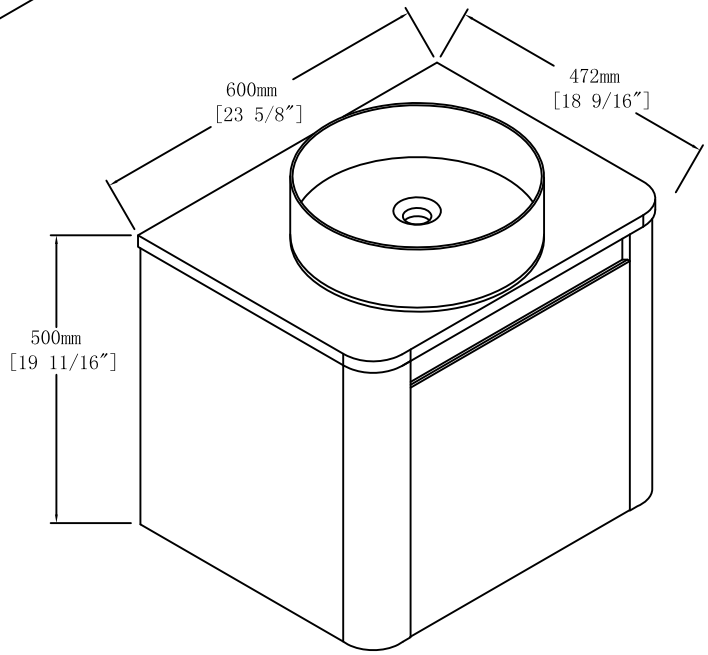

	Item NO.	BV H12324	Version	V1
	Project		Date	2025-4-29