Item # : LM068-67
Assembly Instructions

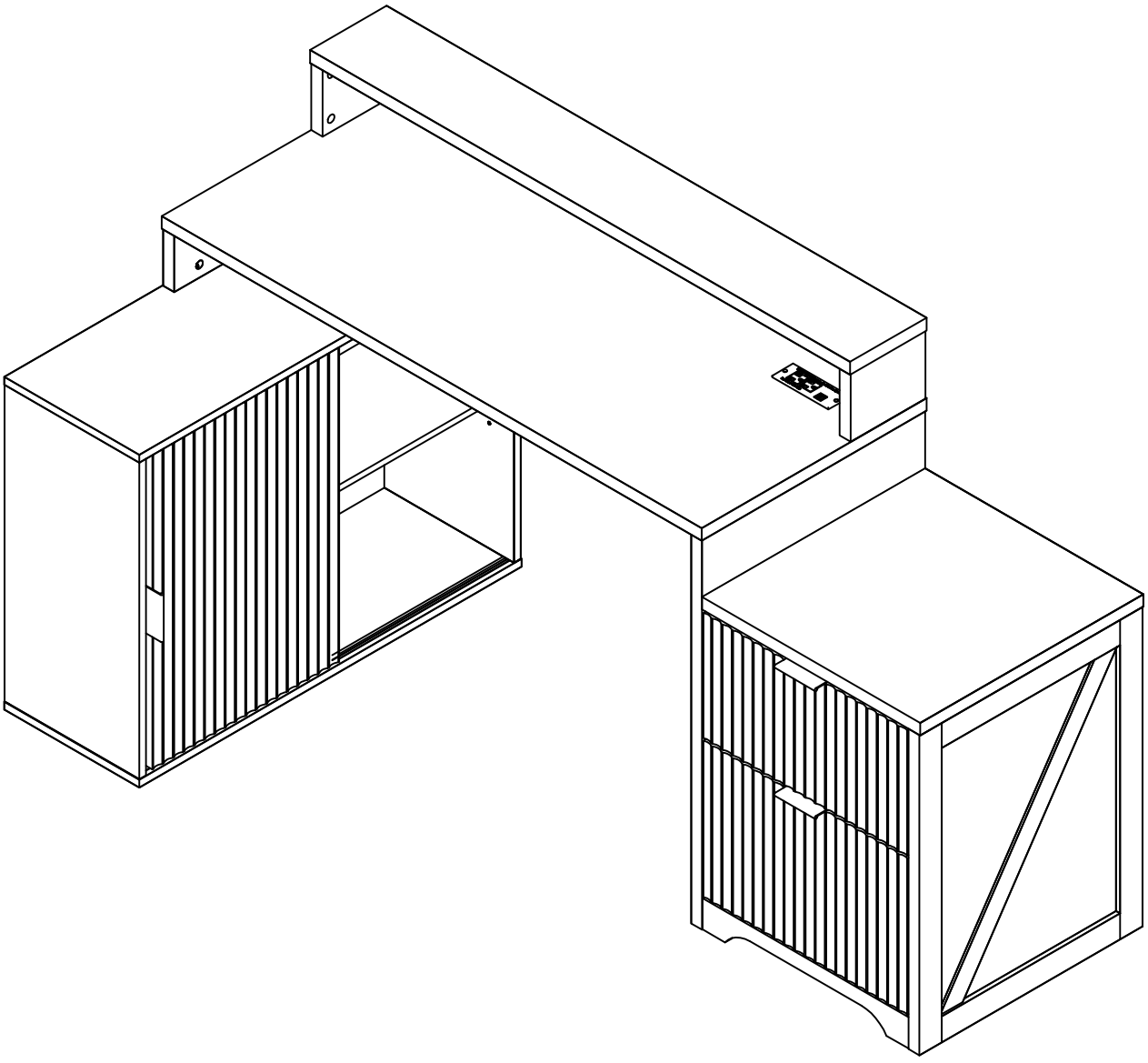

If you have any questions, please follow these steps(“Find Your Orders”- “Problem with the Order” - “Contact Seller”) to contact our customer service. Thanks!

Revsied 13/05/2024

General Assembly Guidelines

I. Ensure that all parts and hardware are available before beginning assembly.

II. Follow each step carefully to ensure the proper assembly of this product.

III. Two people are recommended for ease in the assembly of this product.

IV. The three main types of hardware used to assemble this product are : wood dowels , screws and bolts.

V. The provided glue is to secure wood dowels in place . When first inserting dowels , locate the appropriate hole for the dowel , place a small amount of glue in the hole and insert the dowel . Wipe away excess glue immediately.

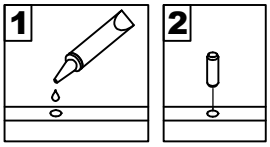

In future assembly steps when dowels are necessary to attach assembly parts together , place a small amount of glue on the end of the dowel before attaching parts together . Wipe away excess glue immediately.

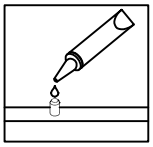

VI. A Phillips head screwdriver is required for the assembly of this product .

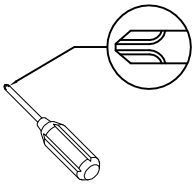

VII. Power tools should not be used to assemble this product .

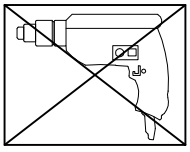

Parts List

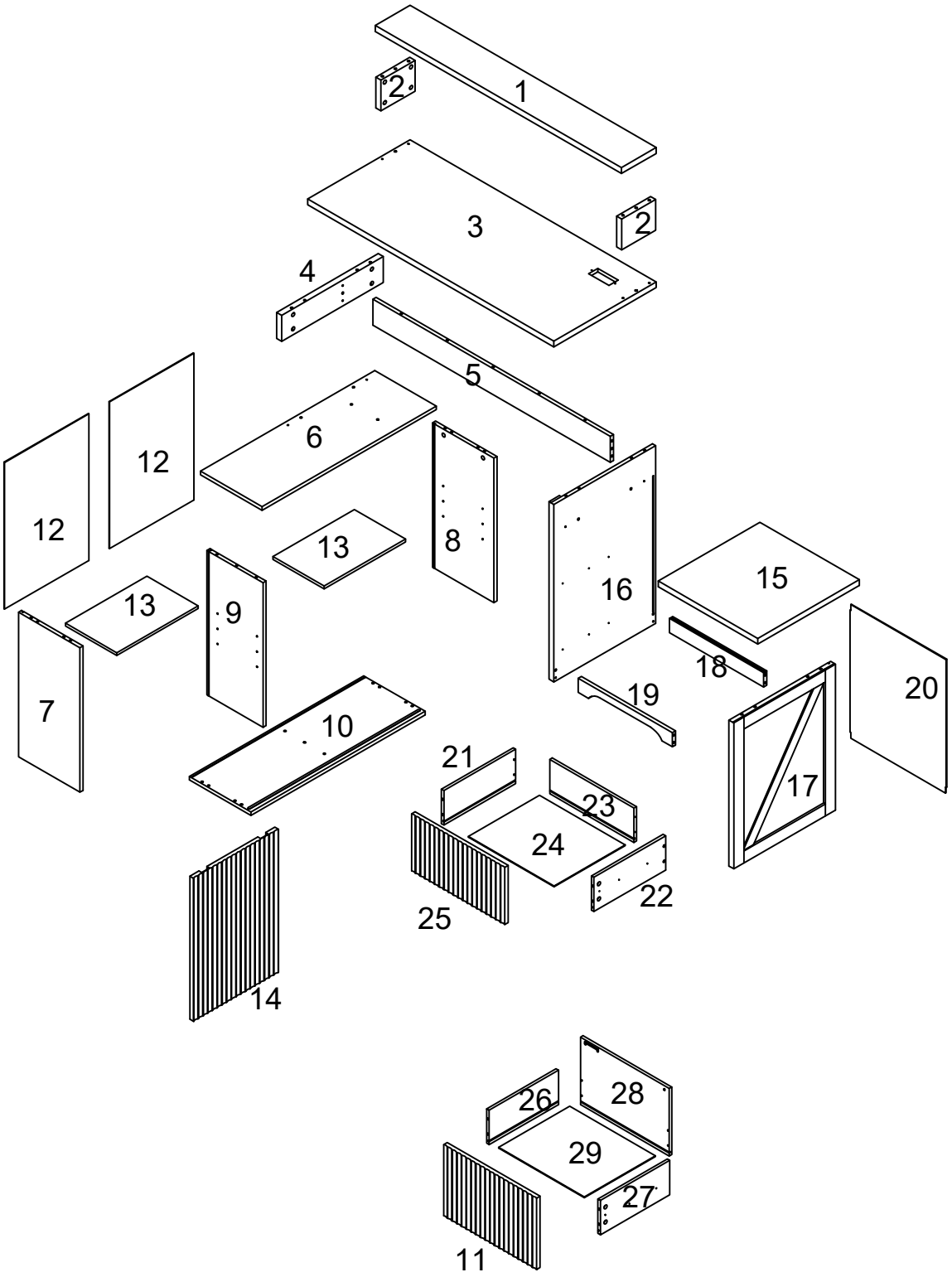

1
2
3
2
4
5
6
12
12
8
13
16
15
13
9
18
20
7
19
10
21
17
23
24
22
25
14
26
28
29
27
11

Hardware List

A		Ø8x30mm	Wooden dowel	32	pcs
B	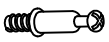	Ø6x35mm	Cam bolt	43	pcs
C		Ø15x11mm	Cam lock	35	pcs
D		Ø15x9mm	Cam lock	8	pcs
E		Ø30mm	Sticker	43	pcs
F	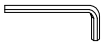	M 4	Hex Key	1	pc
G		M6*12mm	Bolt	8	pcs
H			Corner plate	2	pcs
I			Handle	3	pcs
J			M Upper pulley	2	pcs
K			Down pulley	2	pcs
L		Ø4x32mm	Screw	8	pcs
M		12"	Drawer slides	2	Set
N		Ø3x12mm	Screw	48	pcs
O			Electric socket	1	pc
T		Ø6	Iron Hanger	2	pcs
U	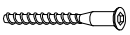	Ø6x50mm	Screw	8	pcs
V			Plastic wedge	12	pcs
W		Ø3x17mm	Screw	12	pcs
X		Ø5x13x26mm	Shelf holder	8	pcs
Y	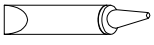		Glue tube	1	pcs

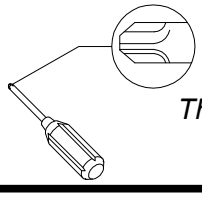

Philips head screwdriver required for assembly
(not included)

The hardware quantities listed above are required for proper assembly.
Some extra hardware may also have been included.

Step 1

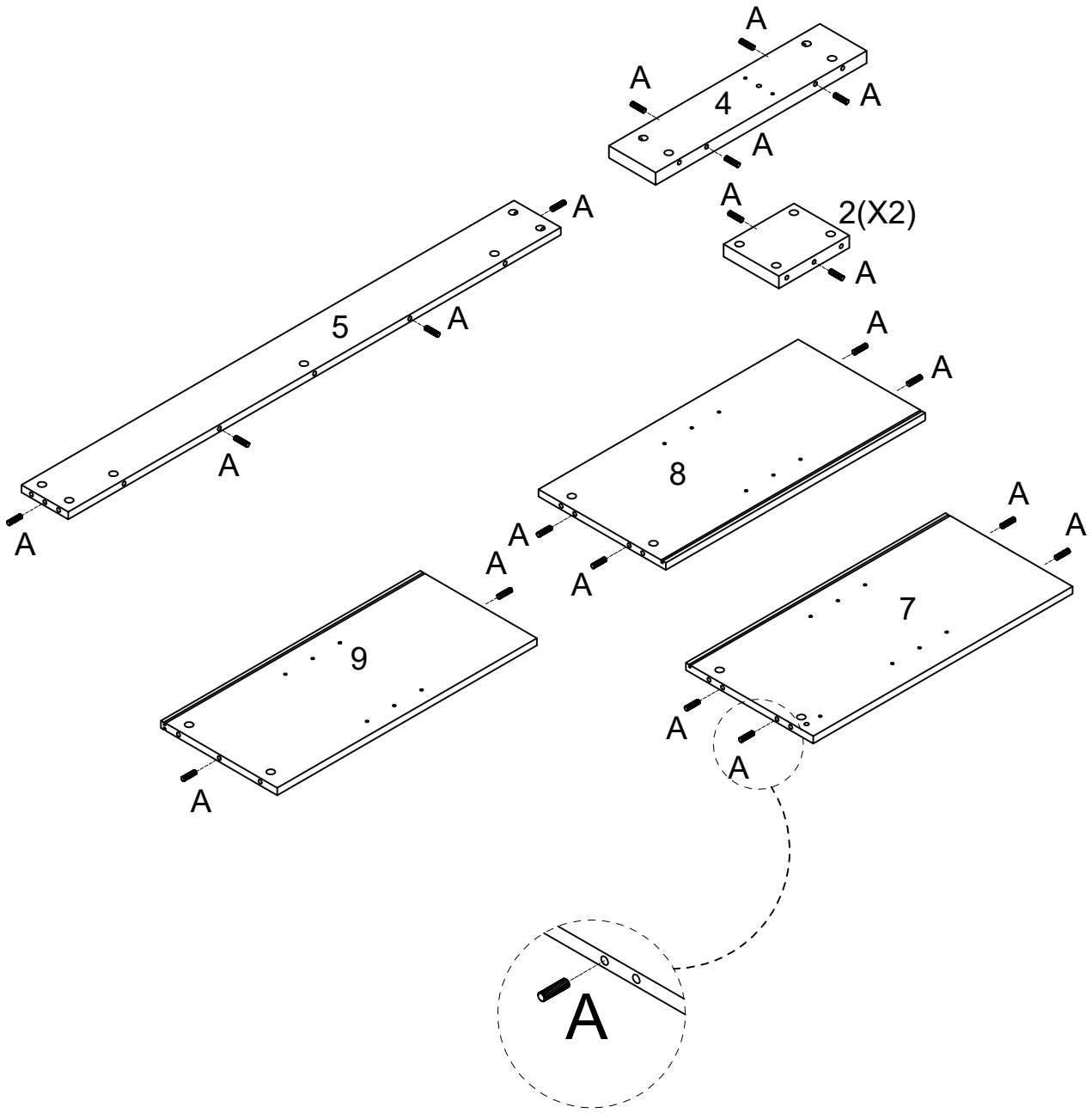

A
X22

Step 2

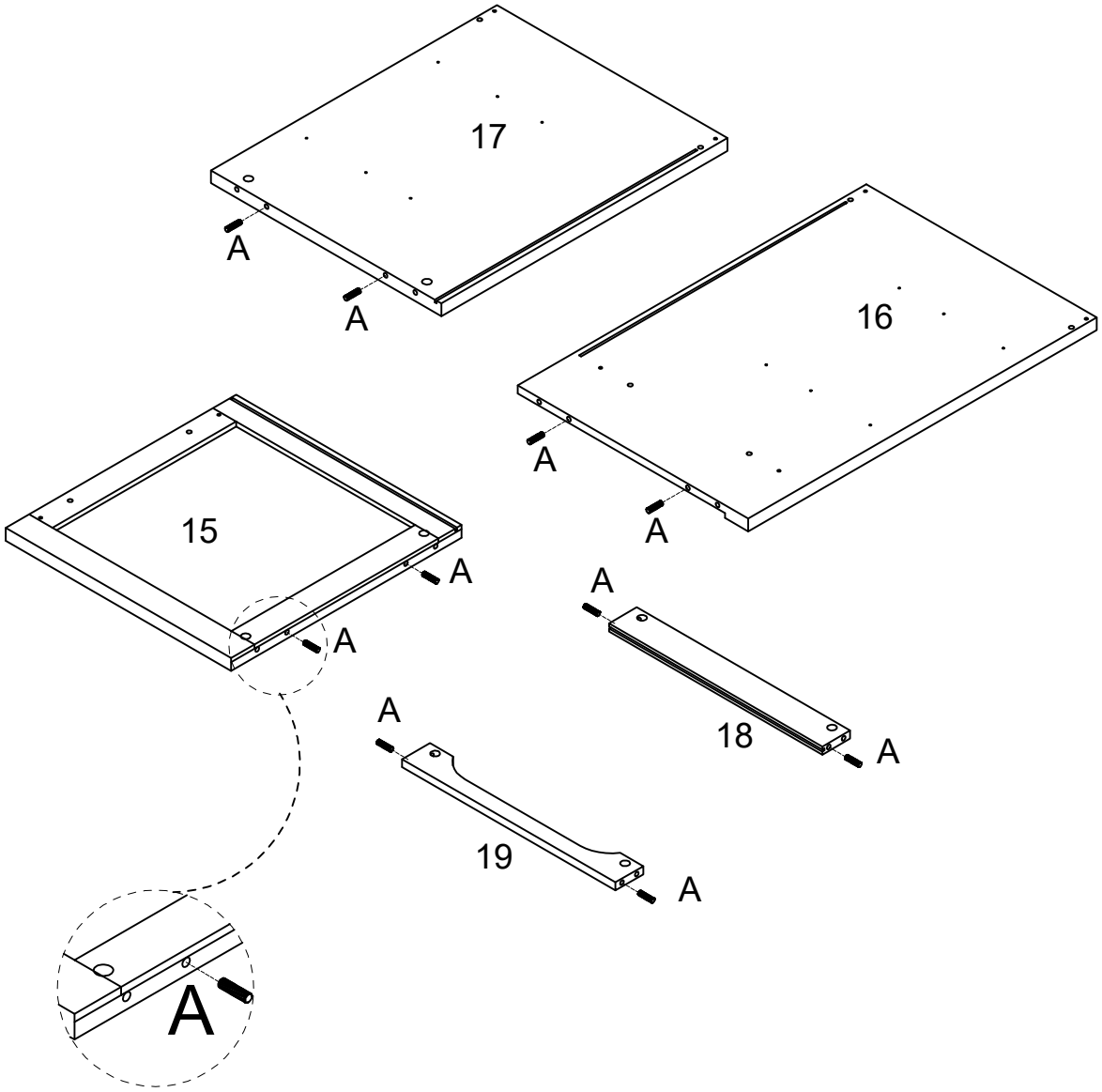

A
X10

Step 3

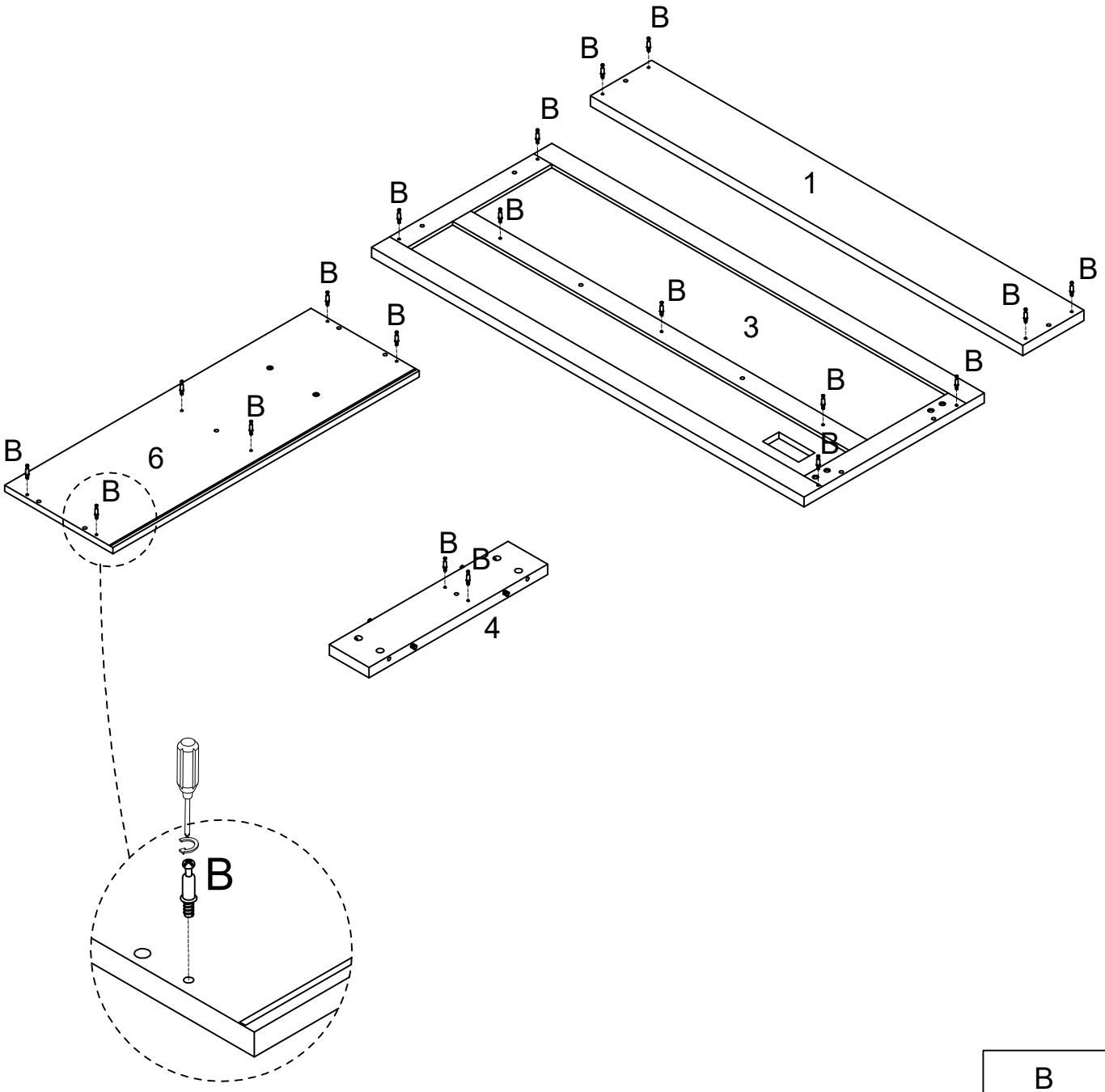

B
X19

Step 4

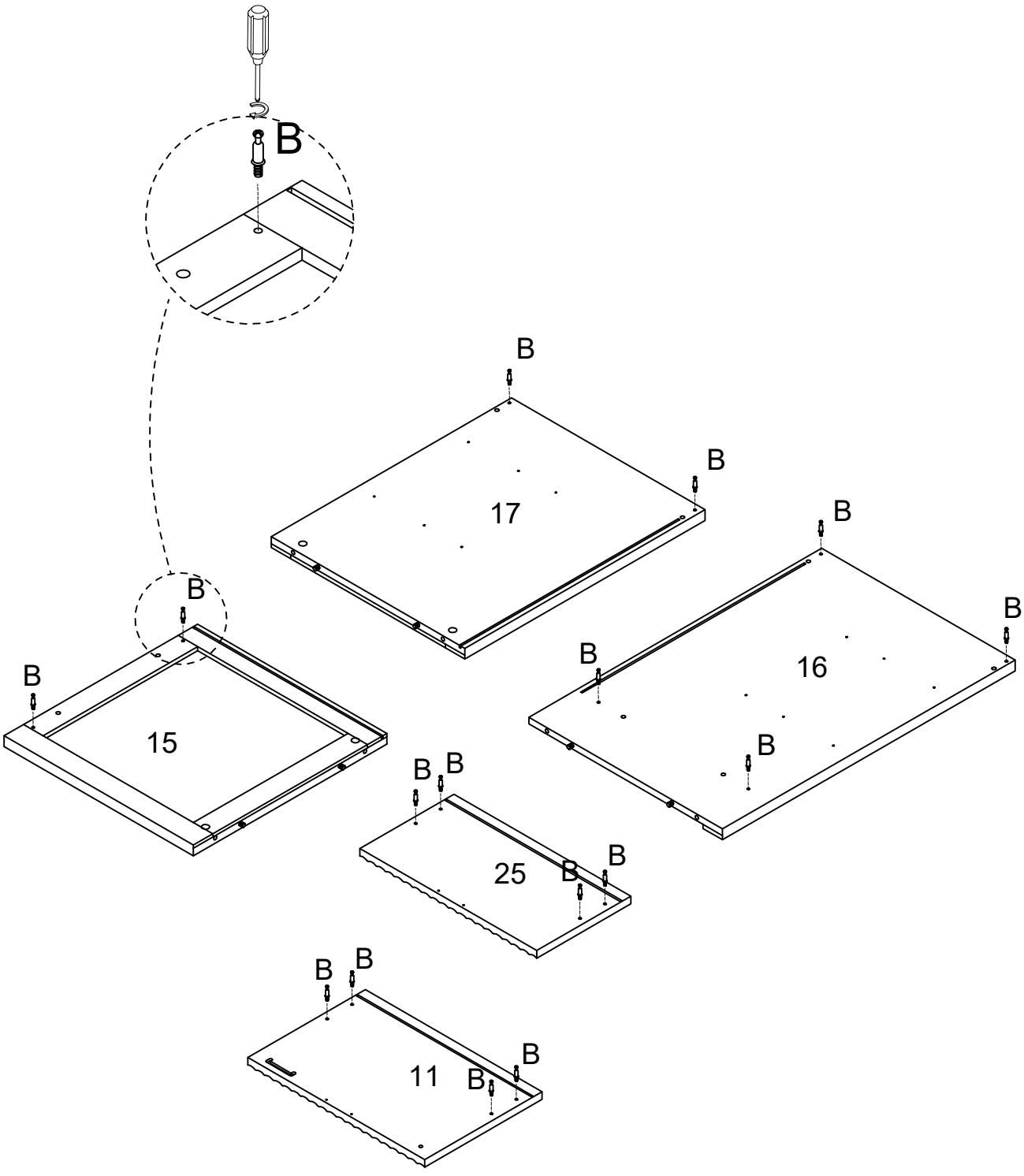

B
X16

Step 5

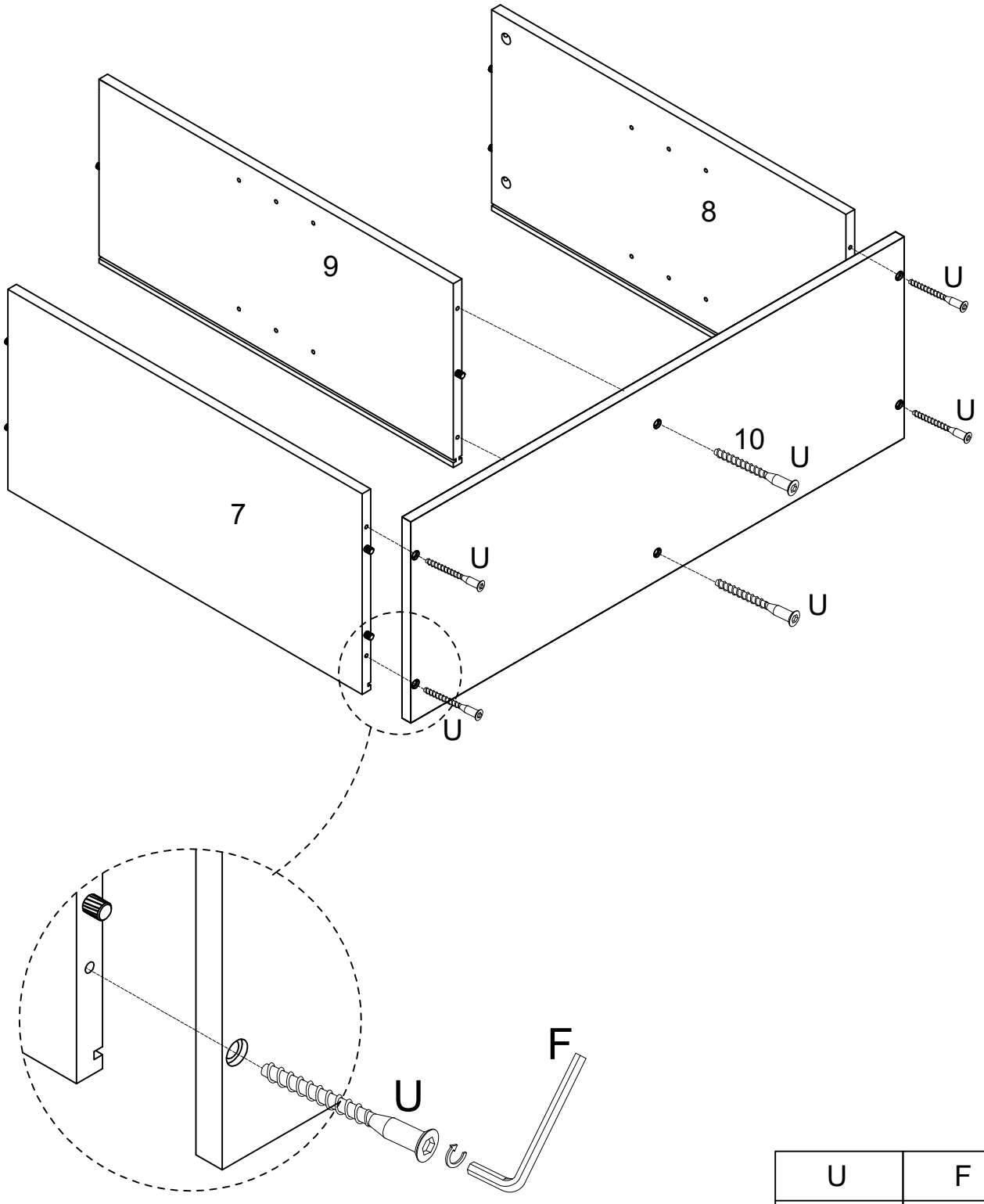

U	F
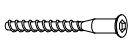	
X6	X1

Step 6

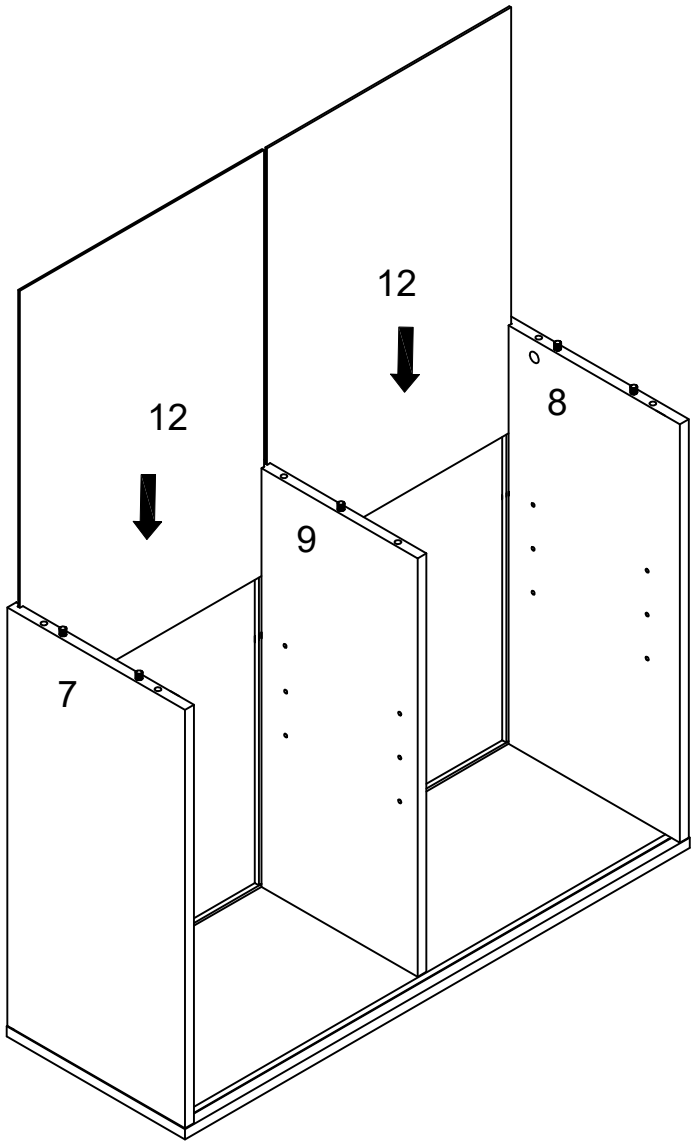

Step 7

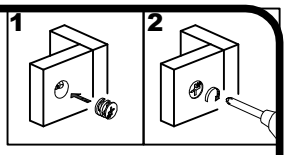

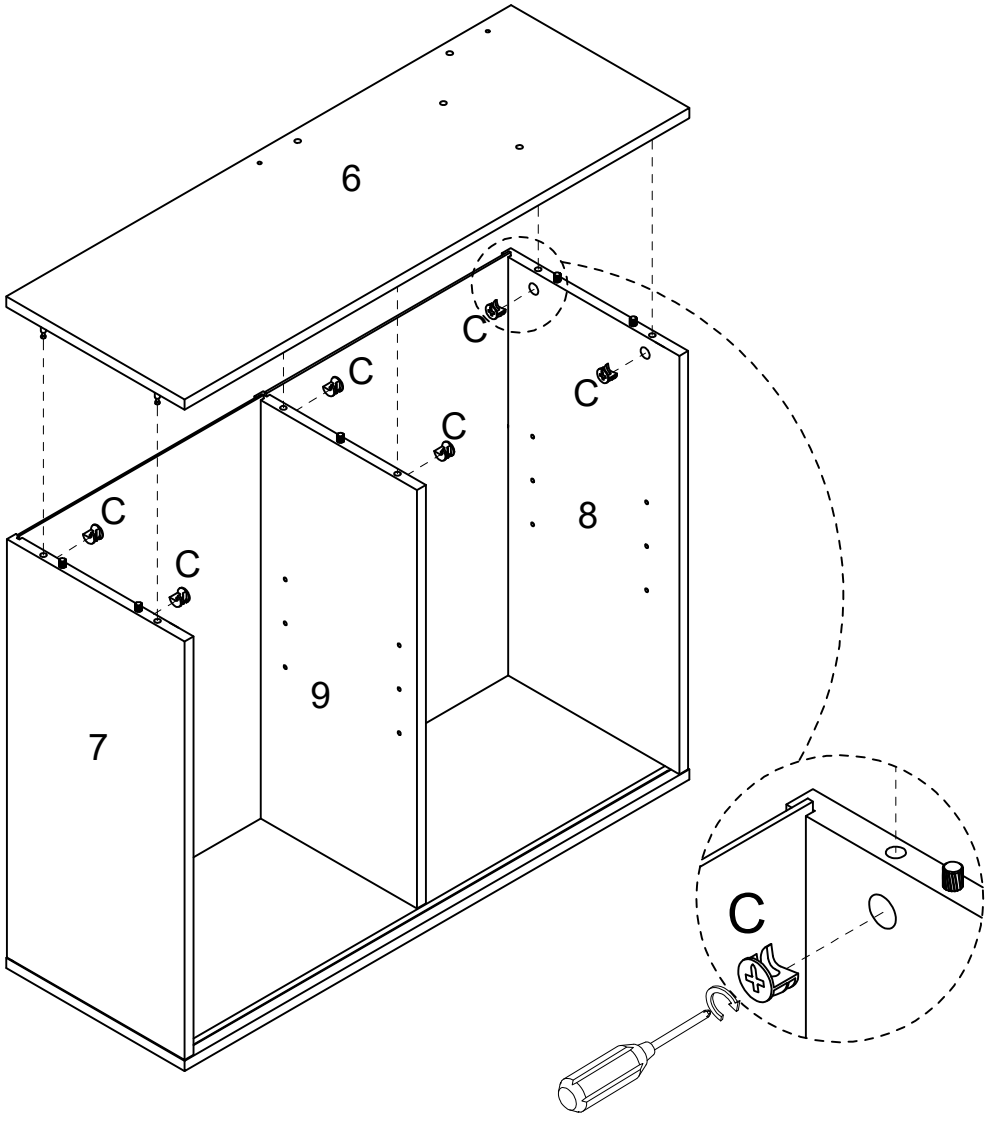

C
X6

Step 8

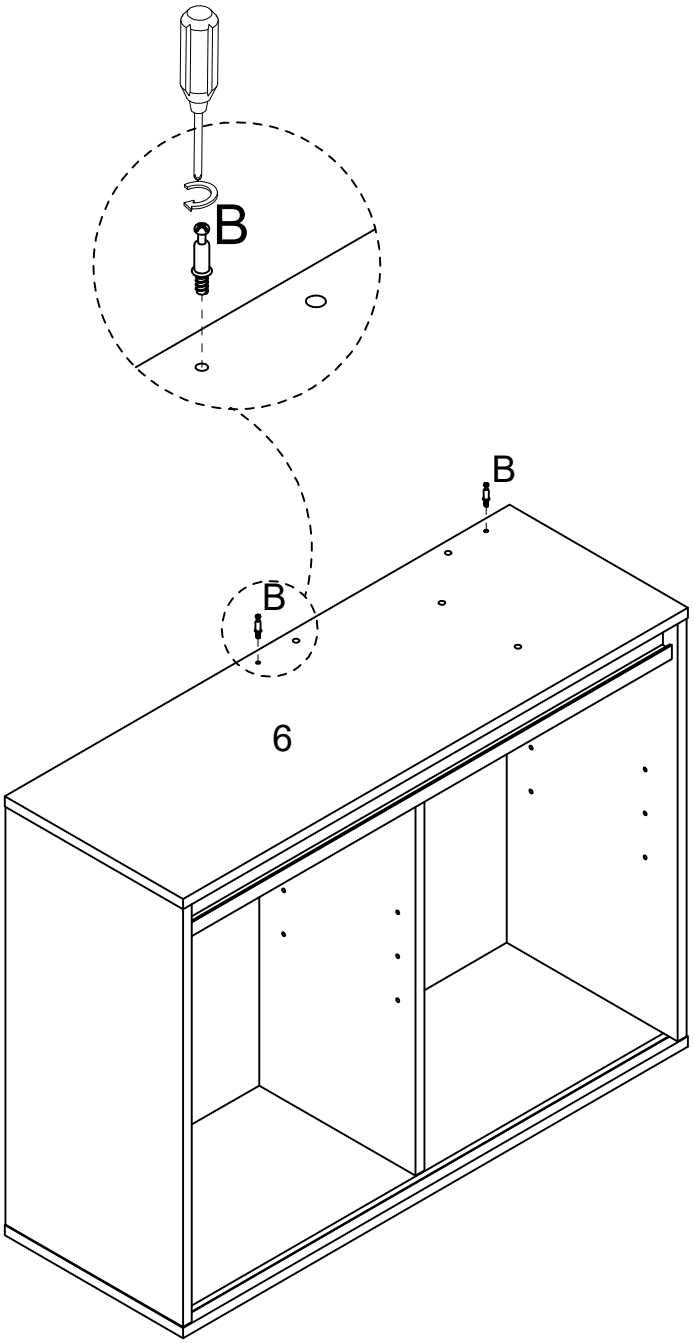

B
X2

Step 9

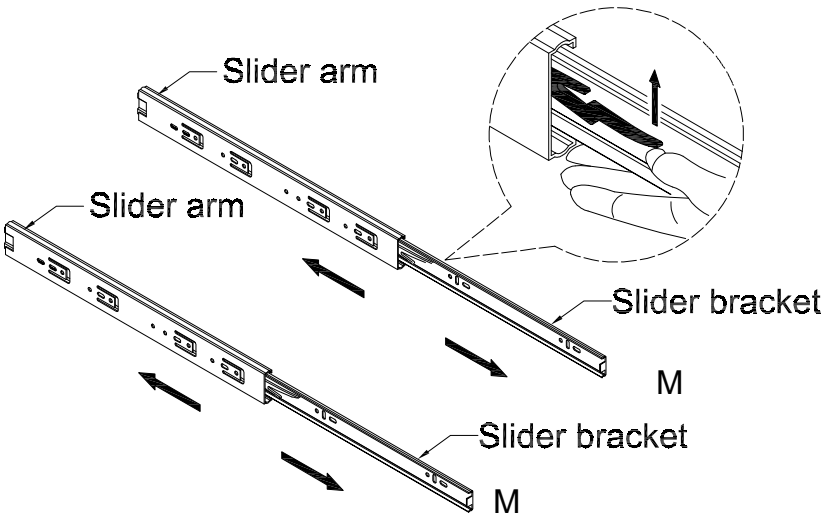

Put slider bracket into slider arm as per diagram.

Step 10

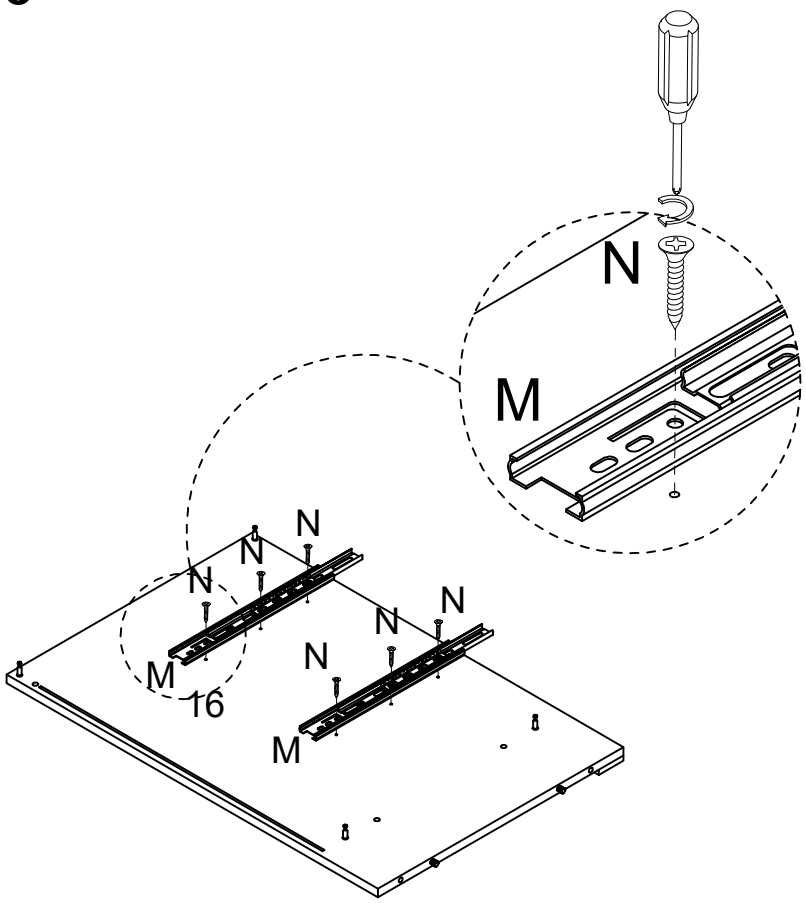

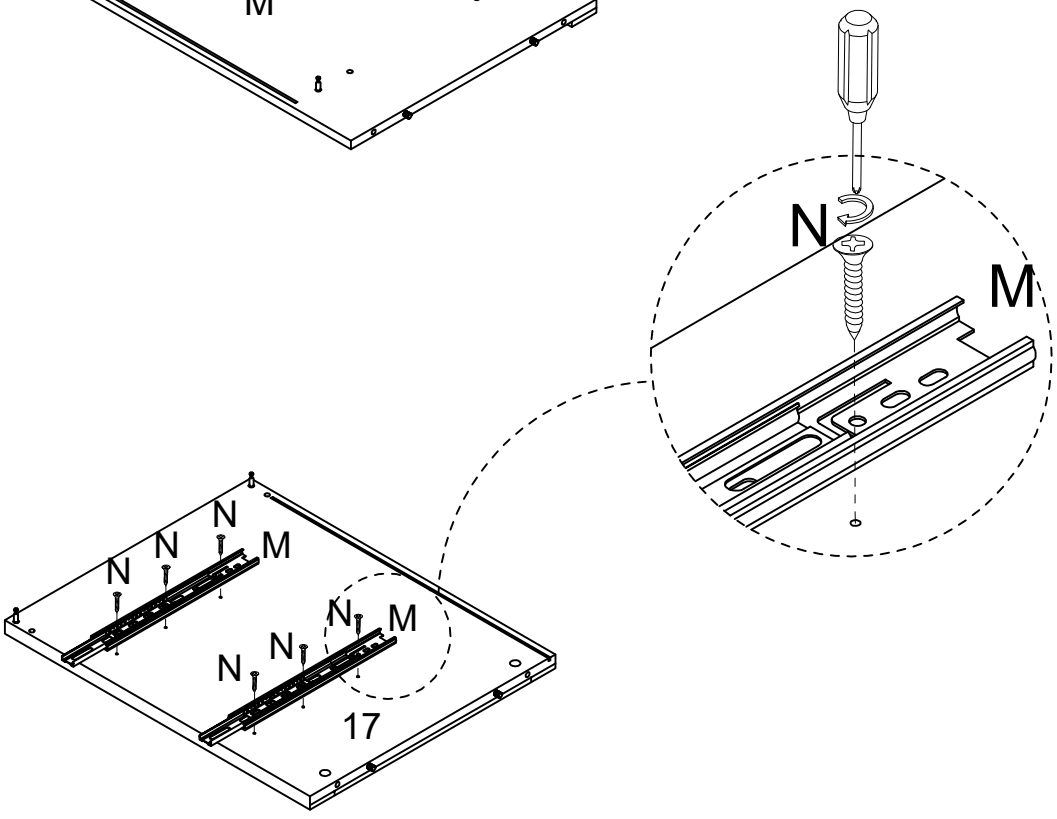

N	M
	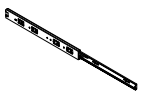
X12	X2

Step 11

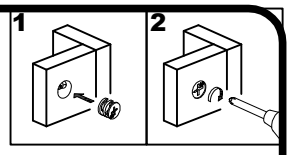

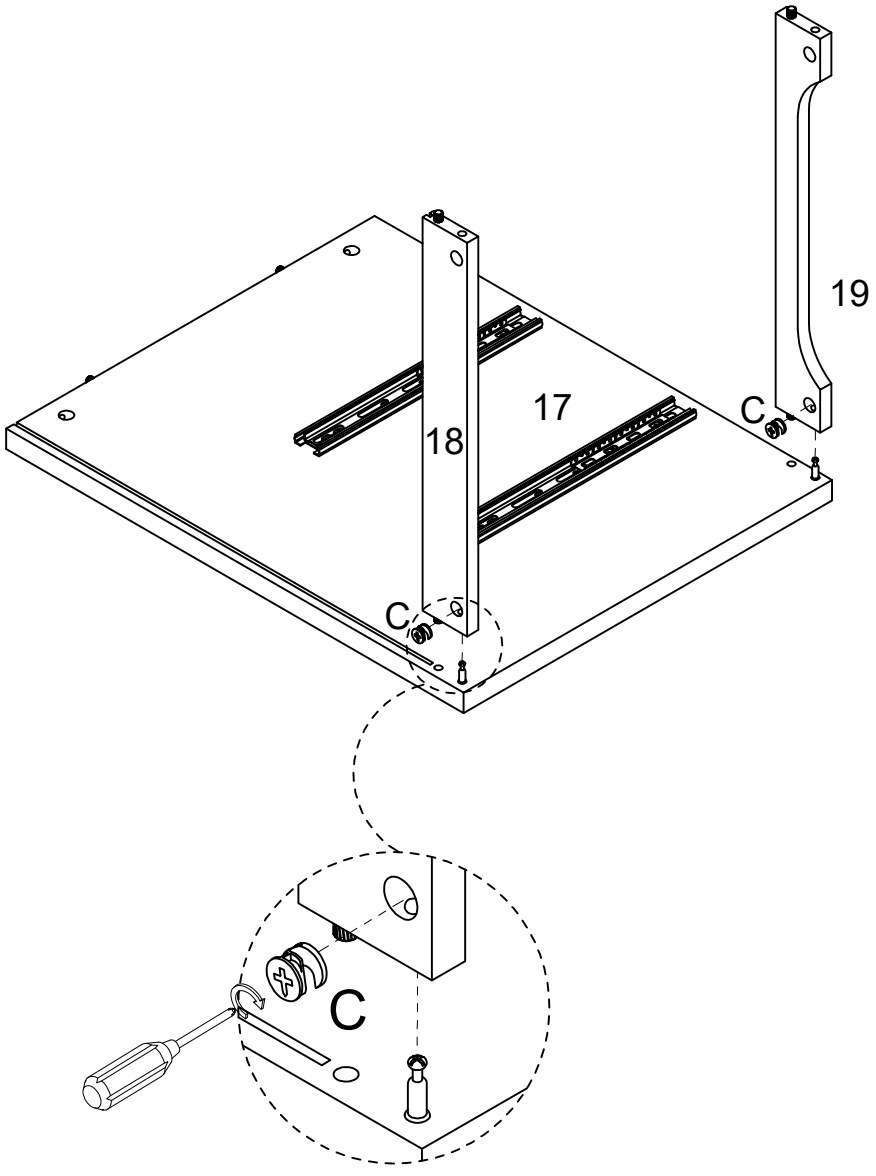

C
X2

Step 12

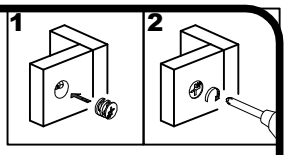

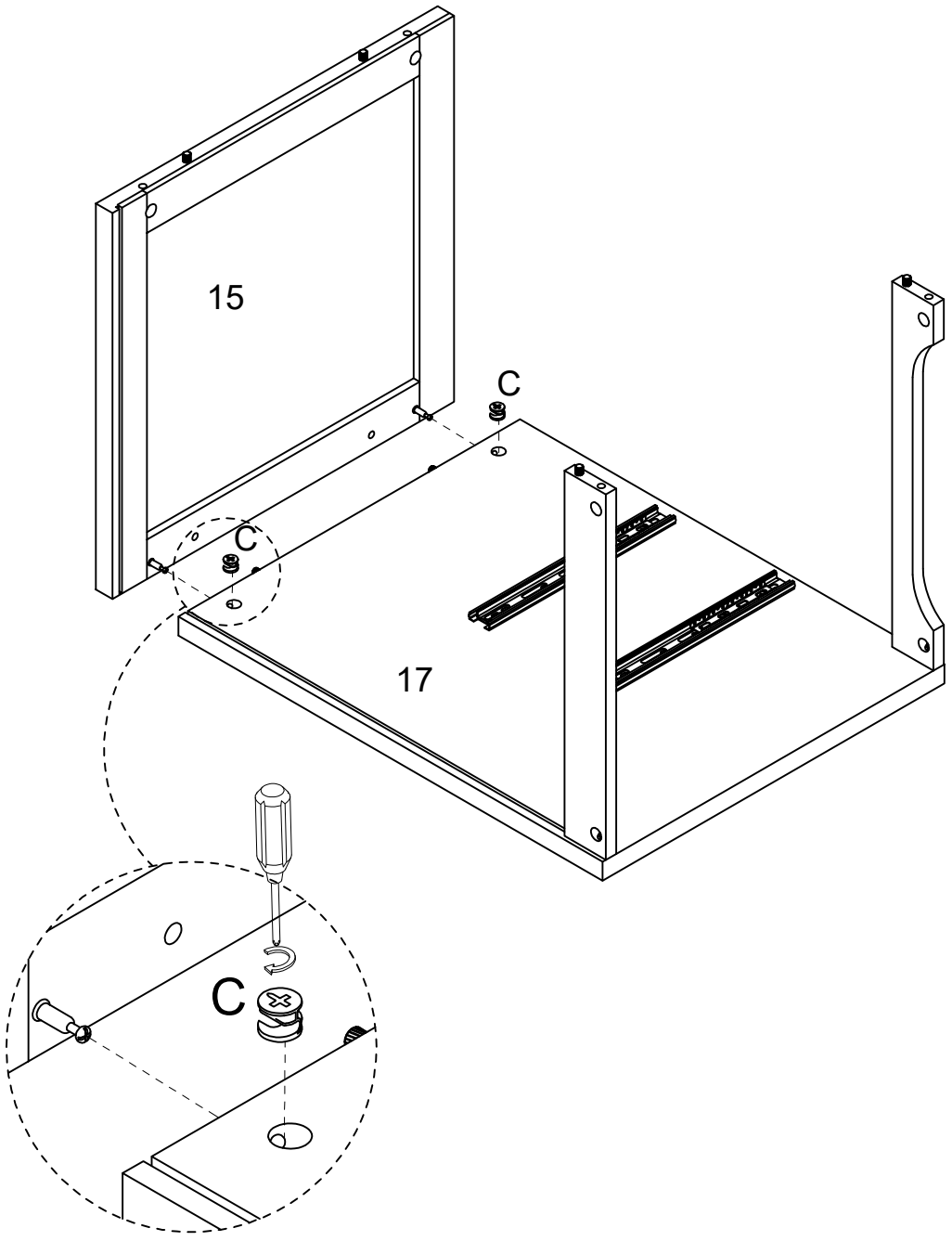

C
X2

Step 13

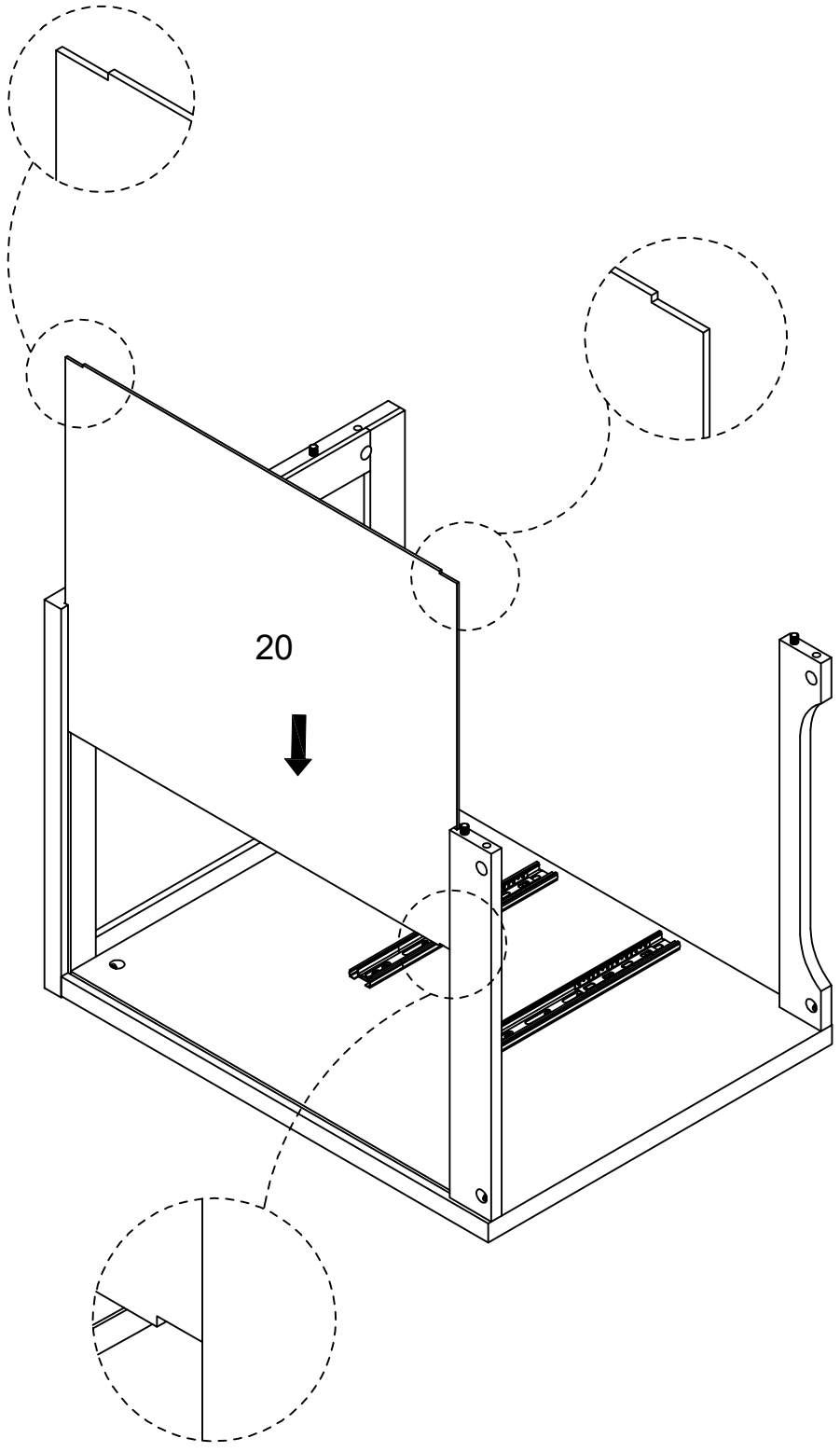

Step 14

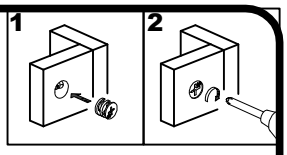

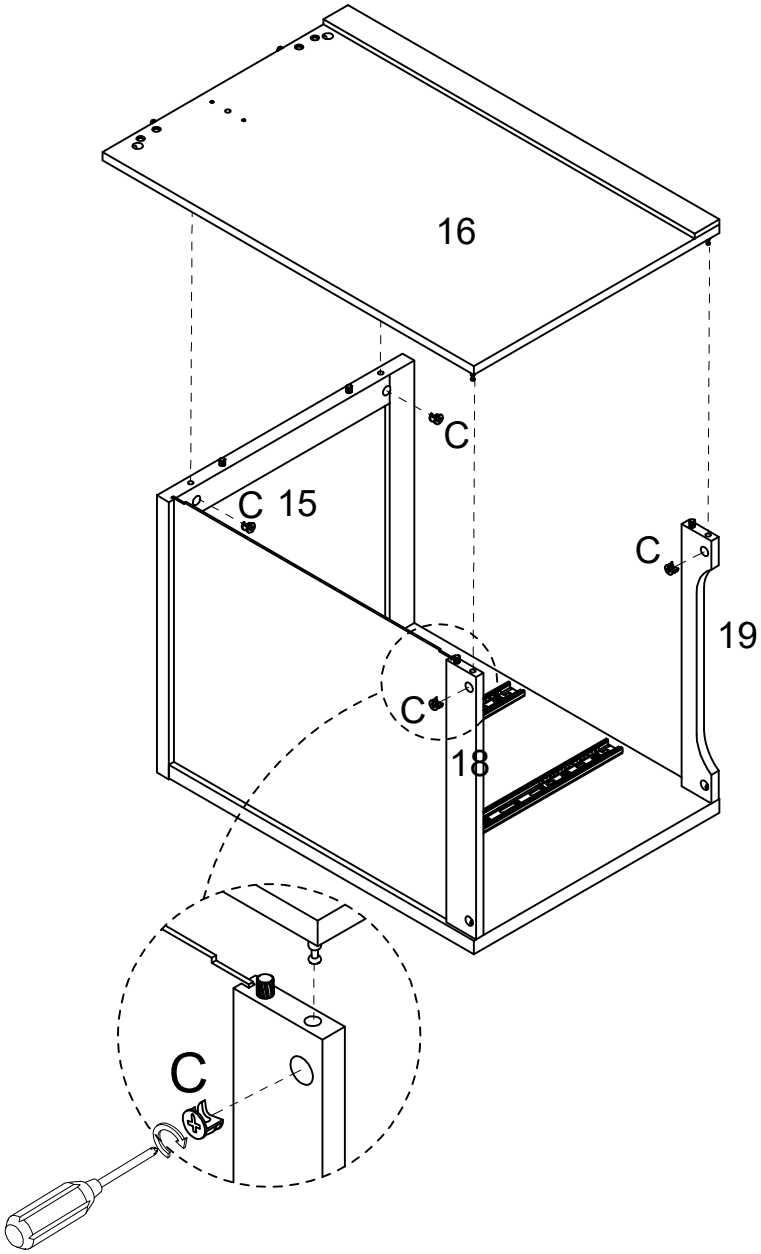

C
X4

Step 15

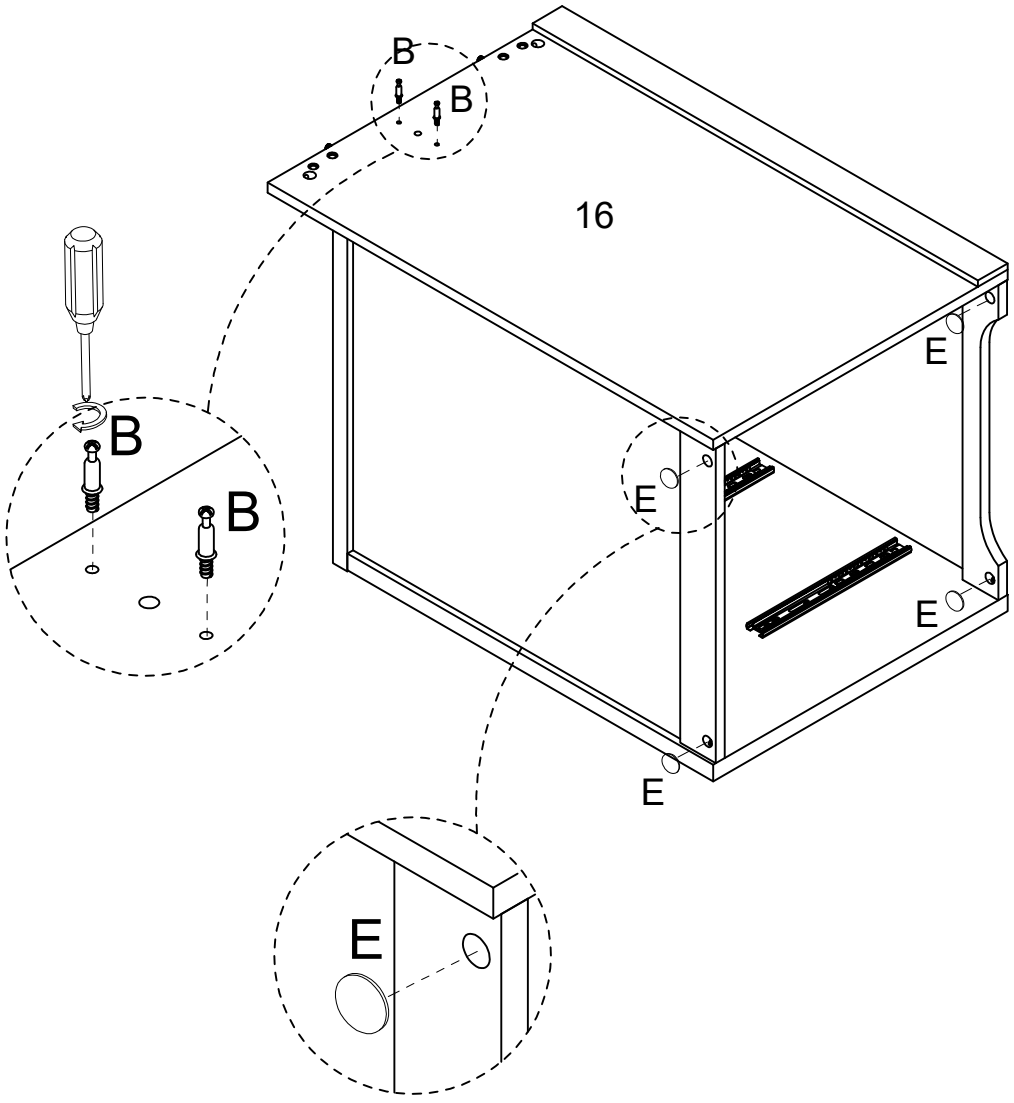

E	B
X8	X2

Step 16

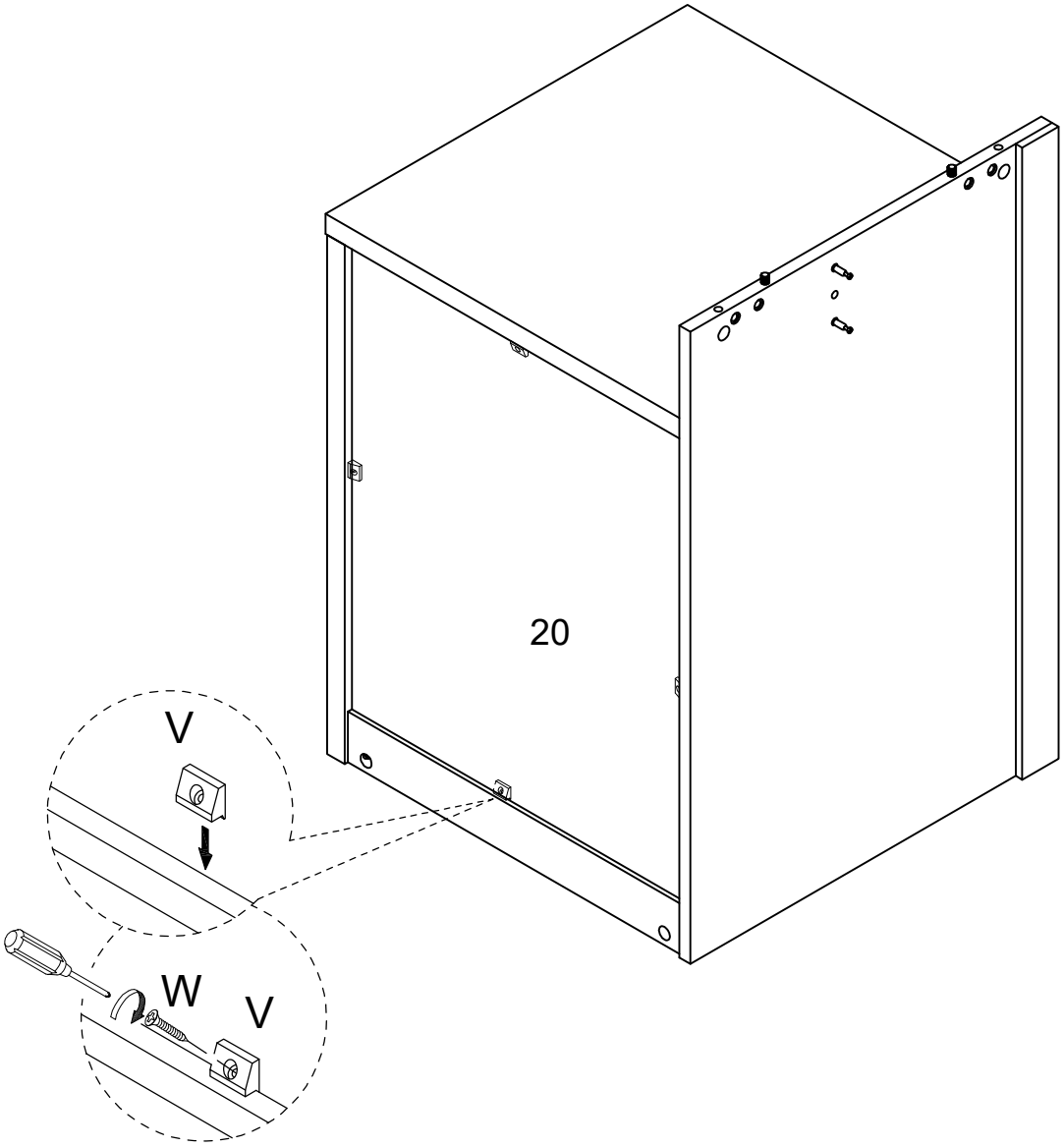

V	W
X4	X4

Step 17

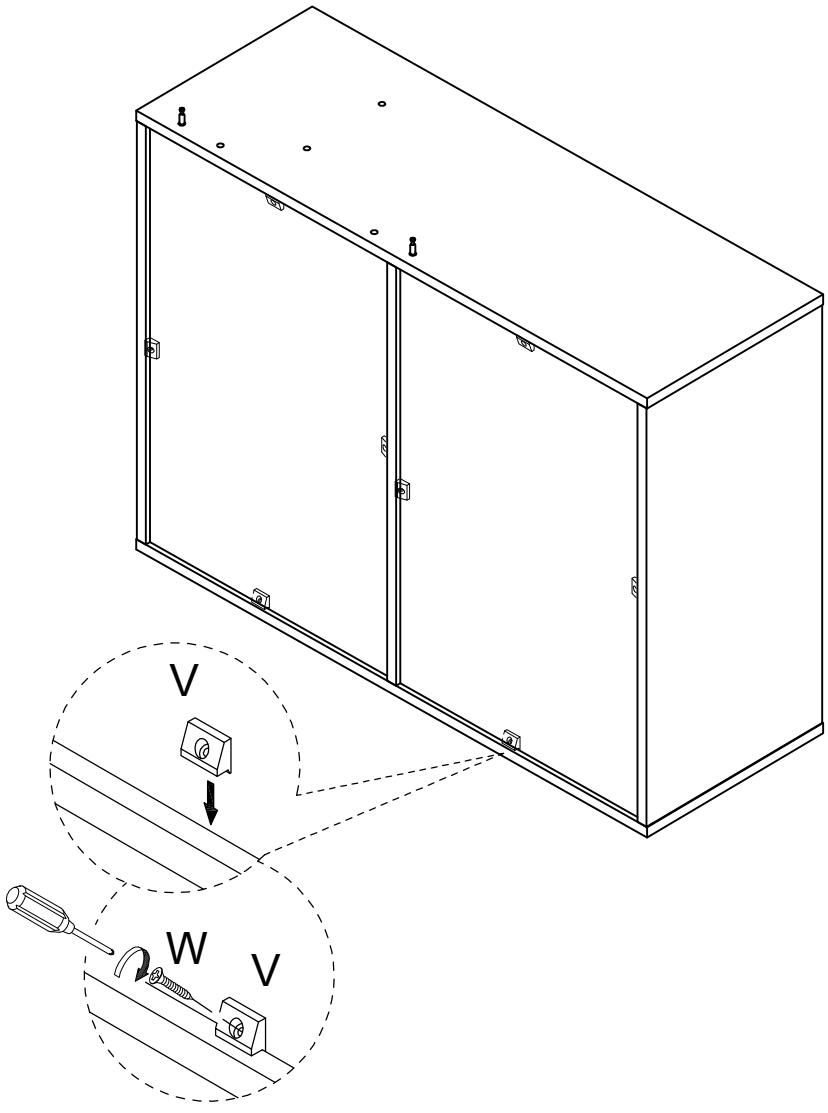

V	W
X8	X8

Step 18

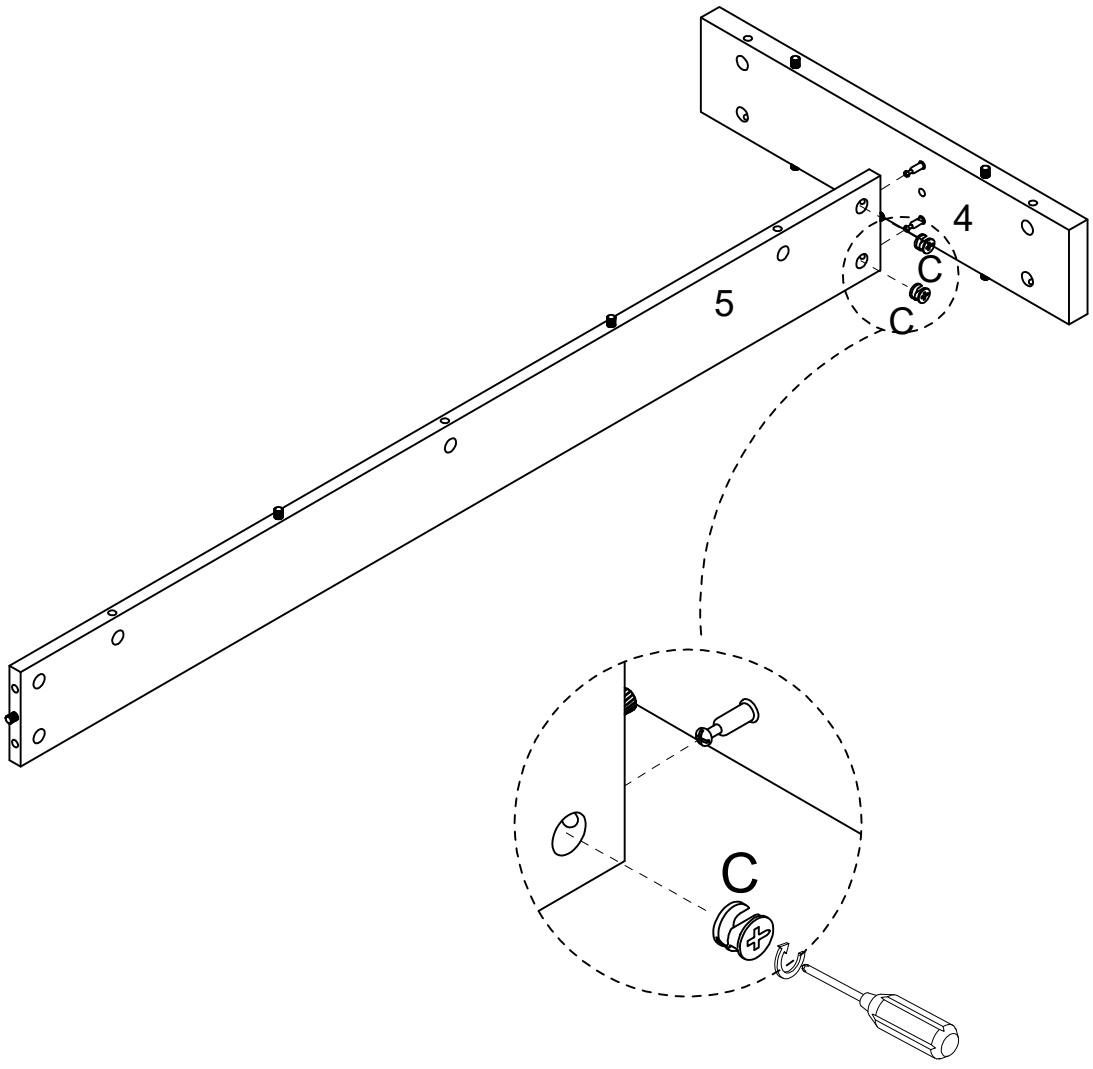

C
X2

Step 19

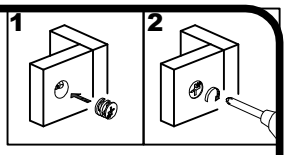

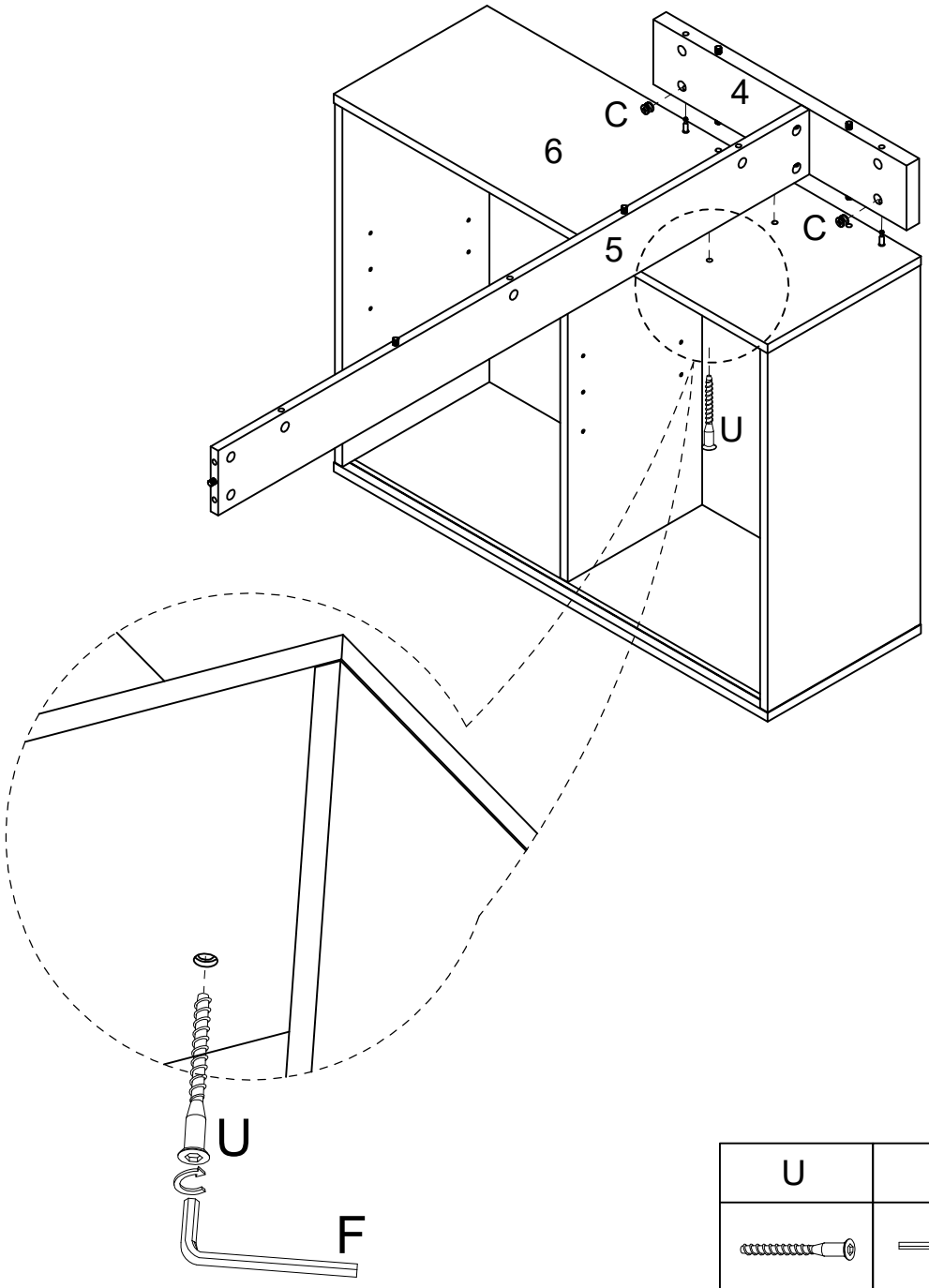

U	F	C
X2	X1	X2

Step 20

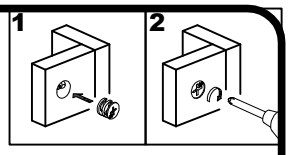

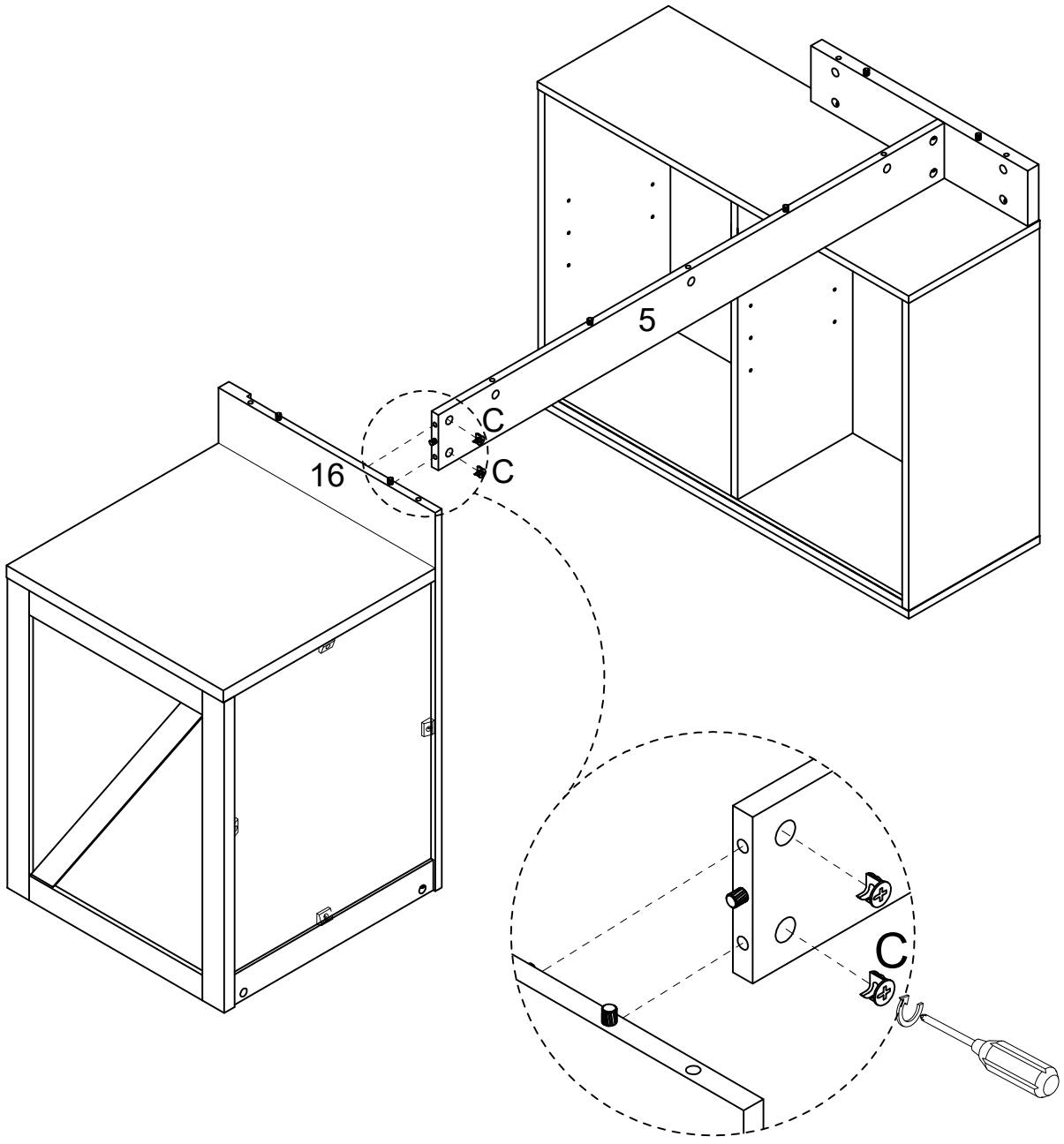

C
X2

Step 21

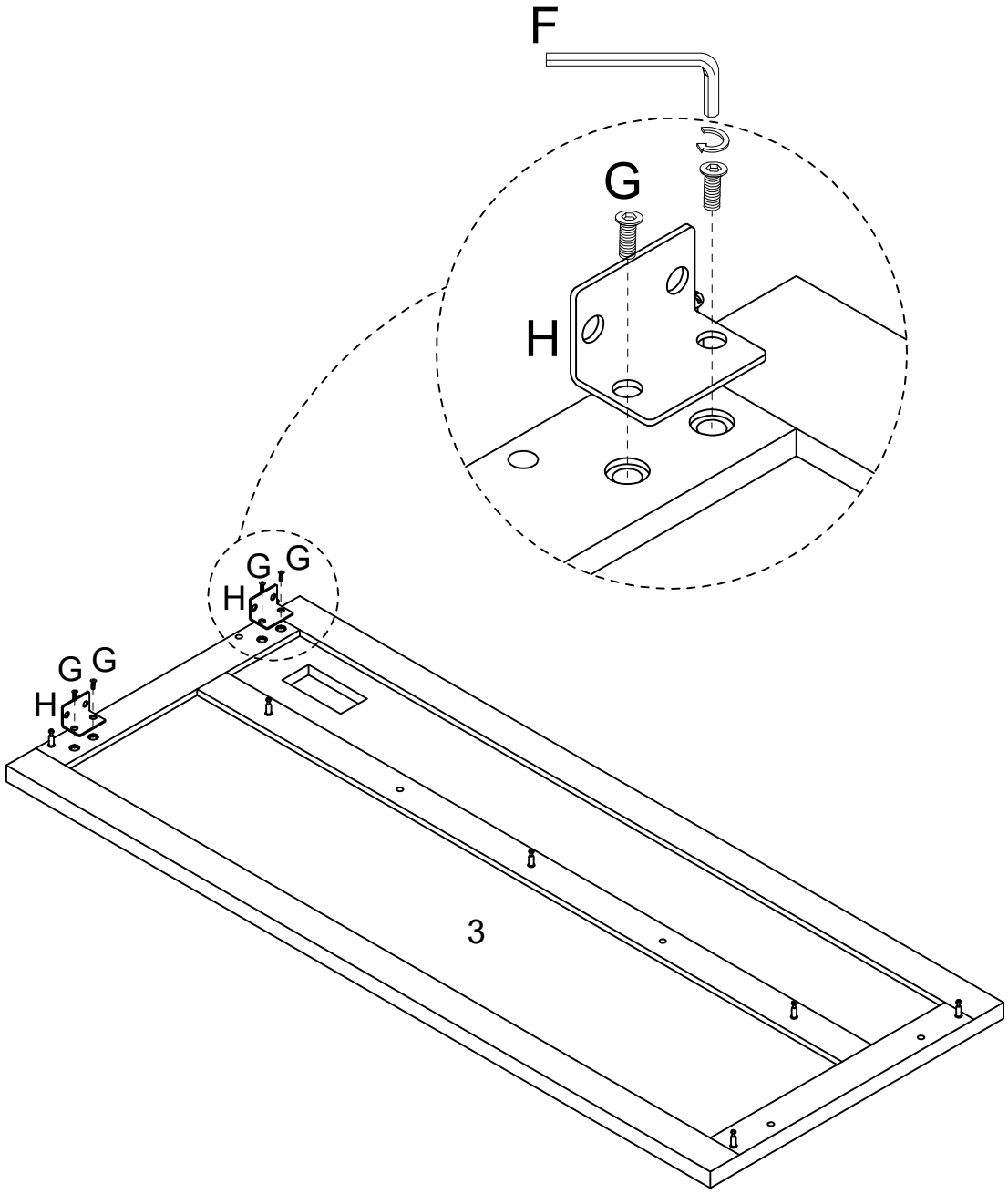

F	G	H
X1	X4	X2

Step 22

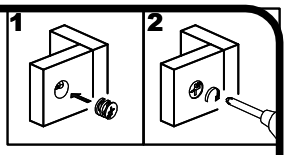

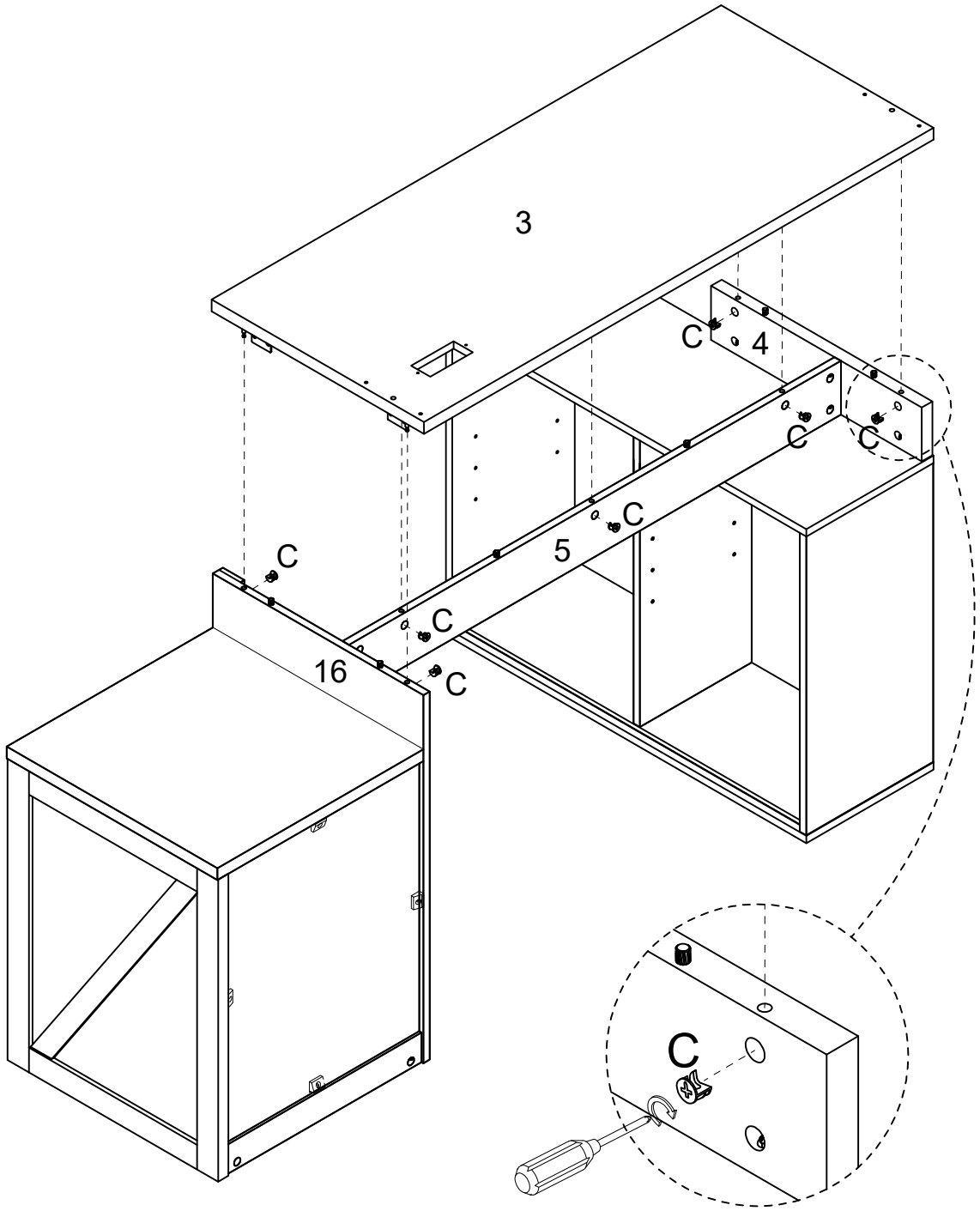

C
X7

Step 23

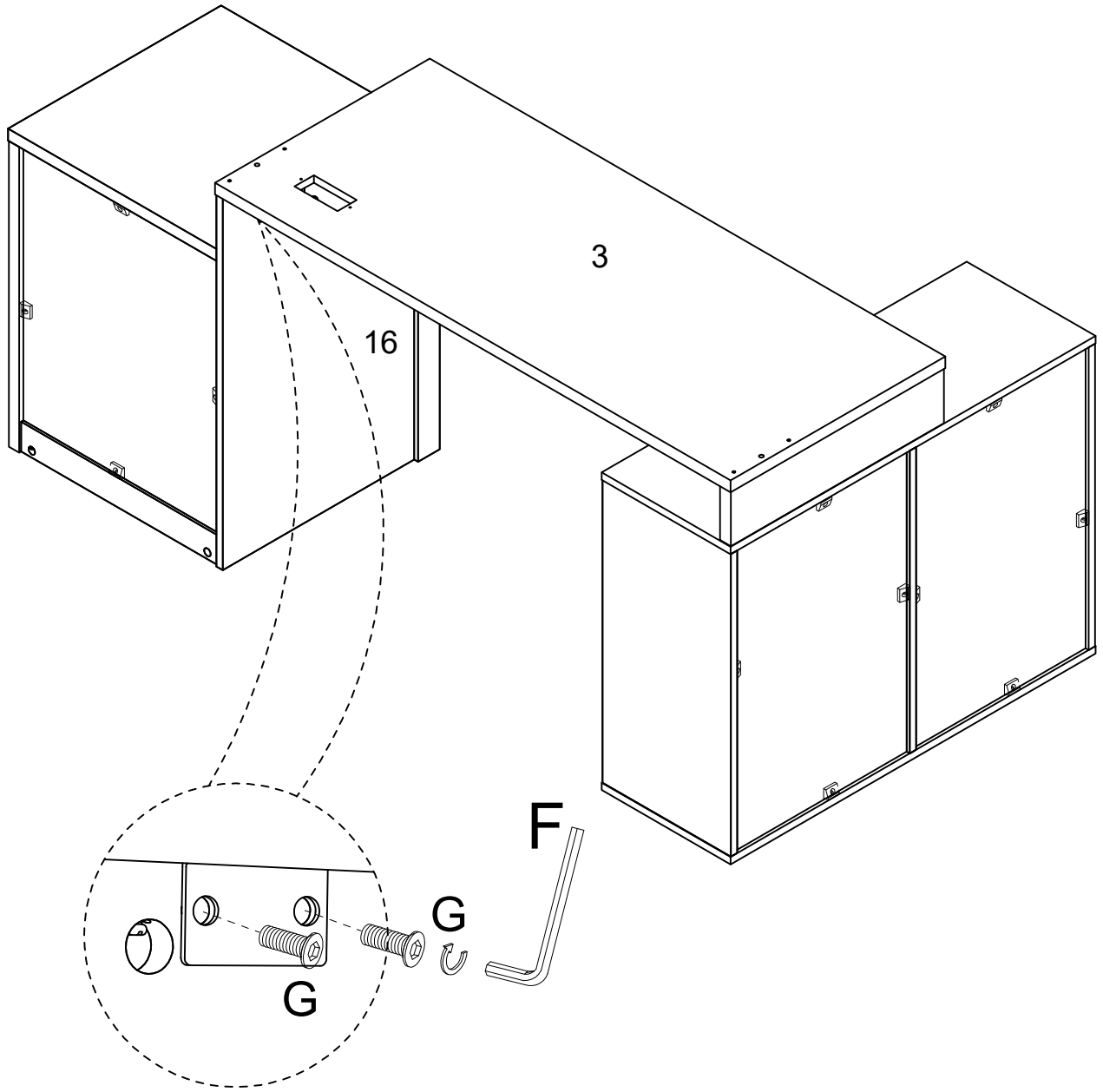

F	G
X1	X4

Step 24

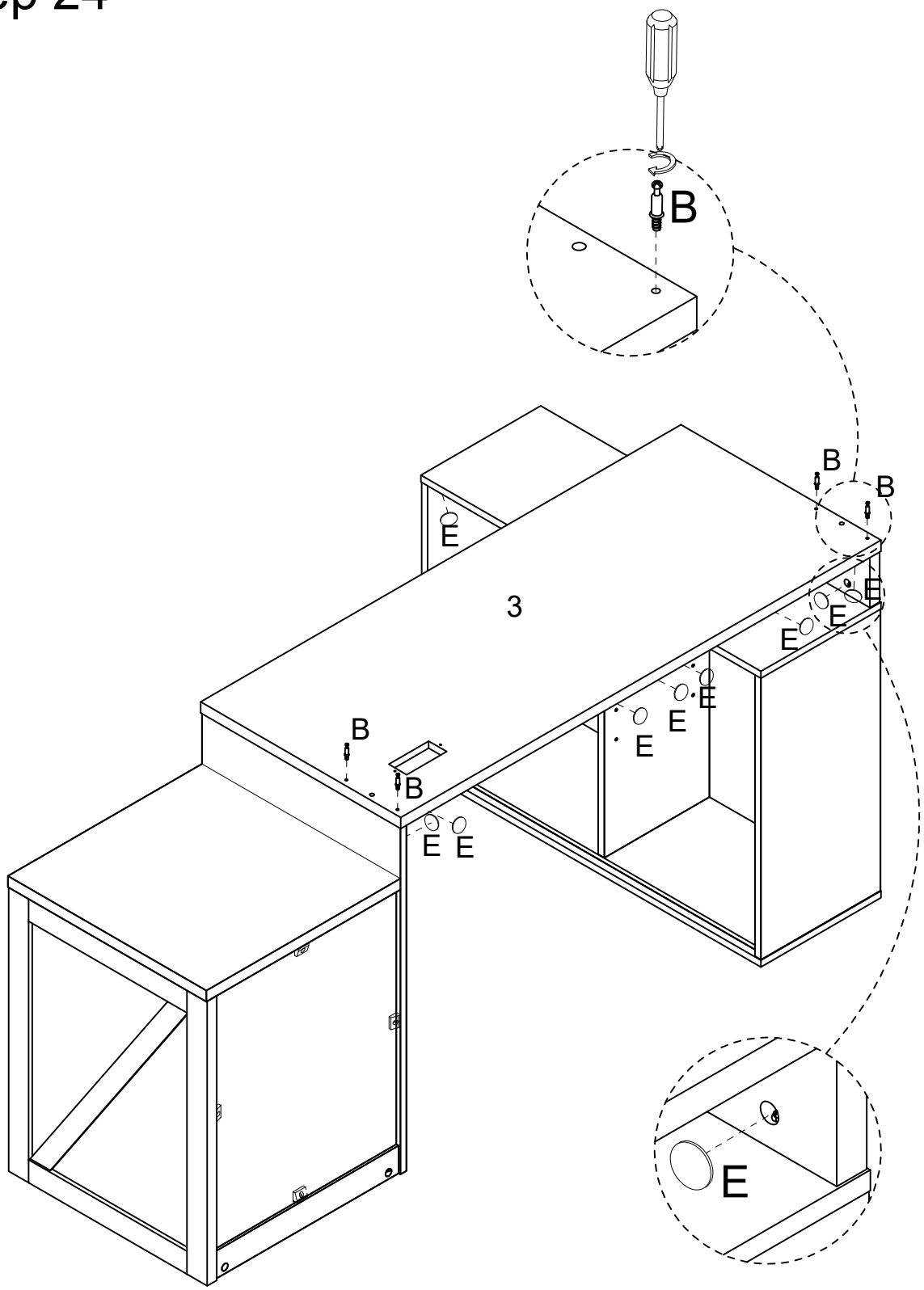

E	B
X19	X4

Step 25

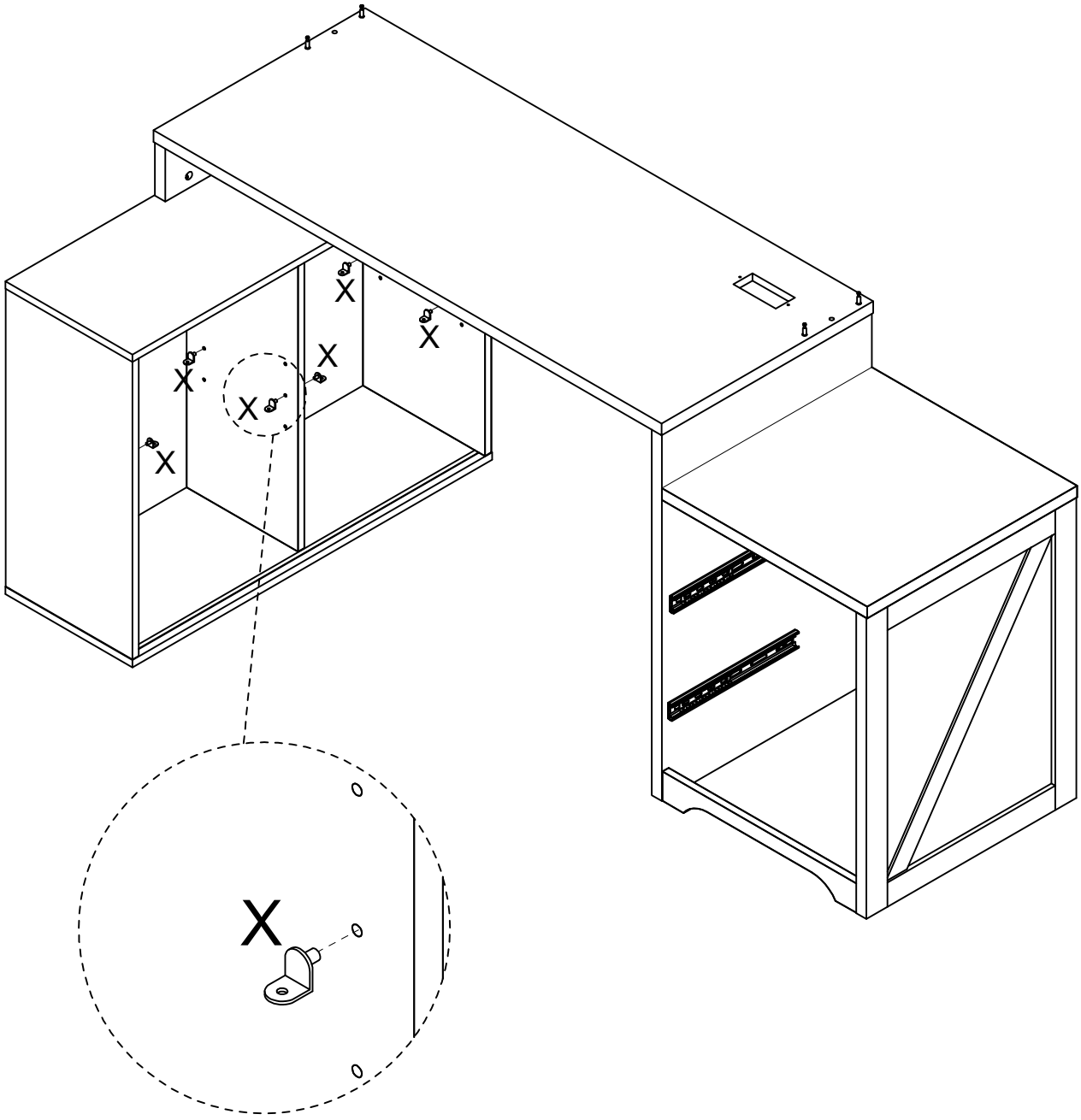

X
X8

Step 26

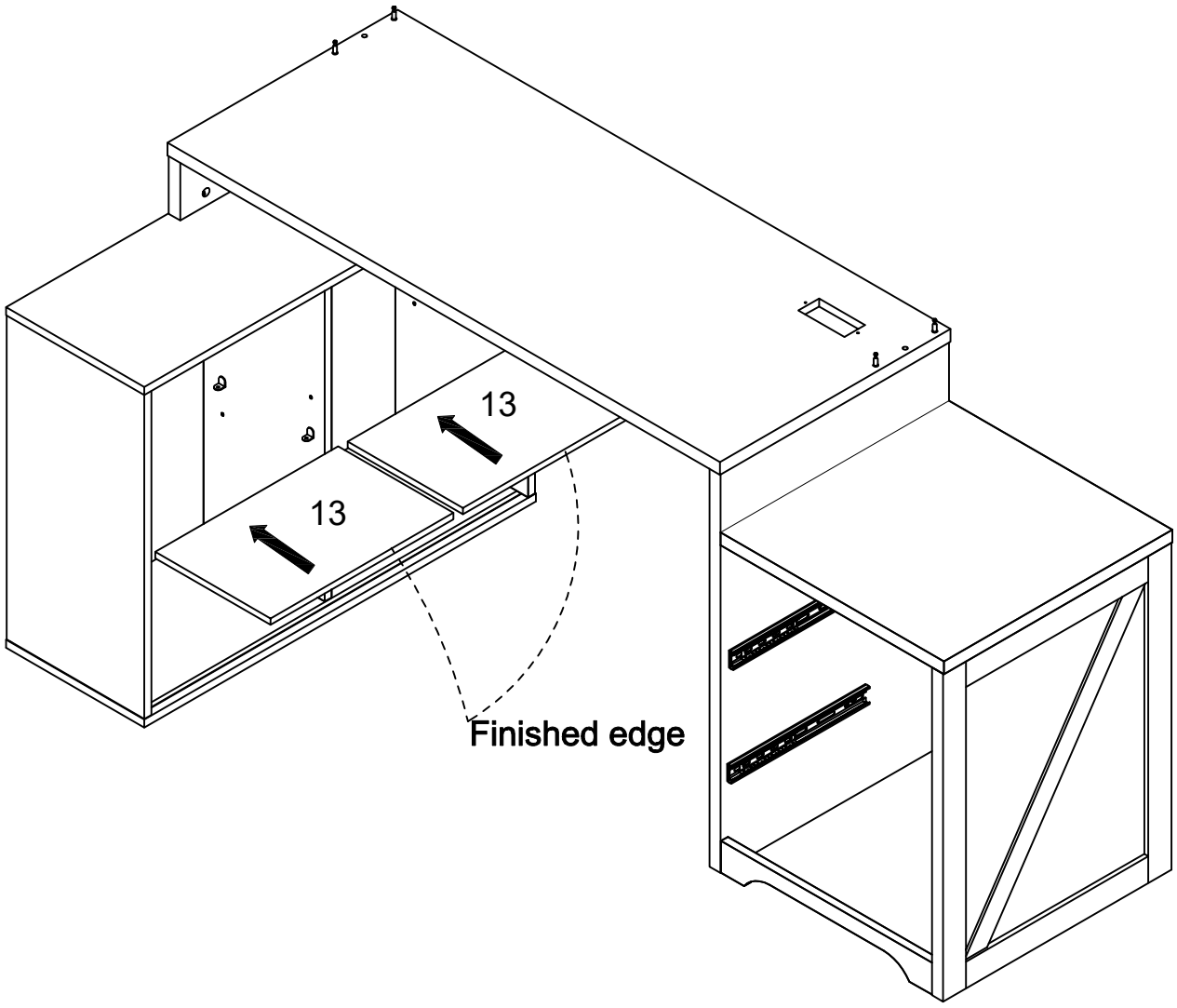

Step 27

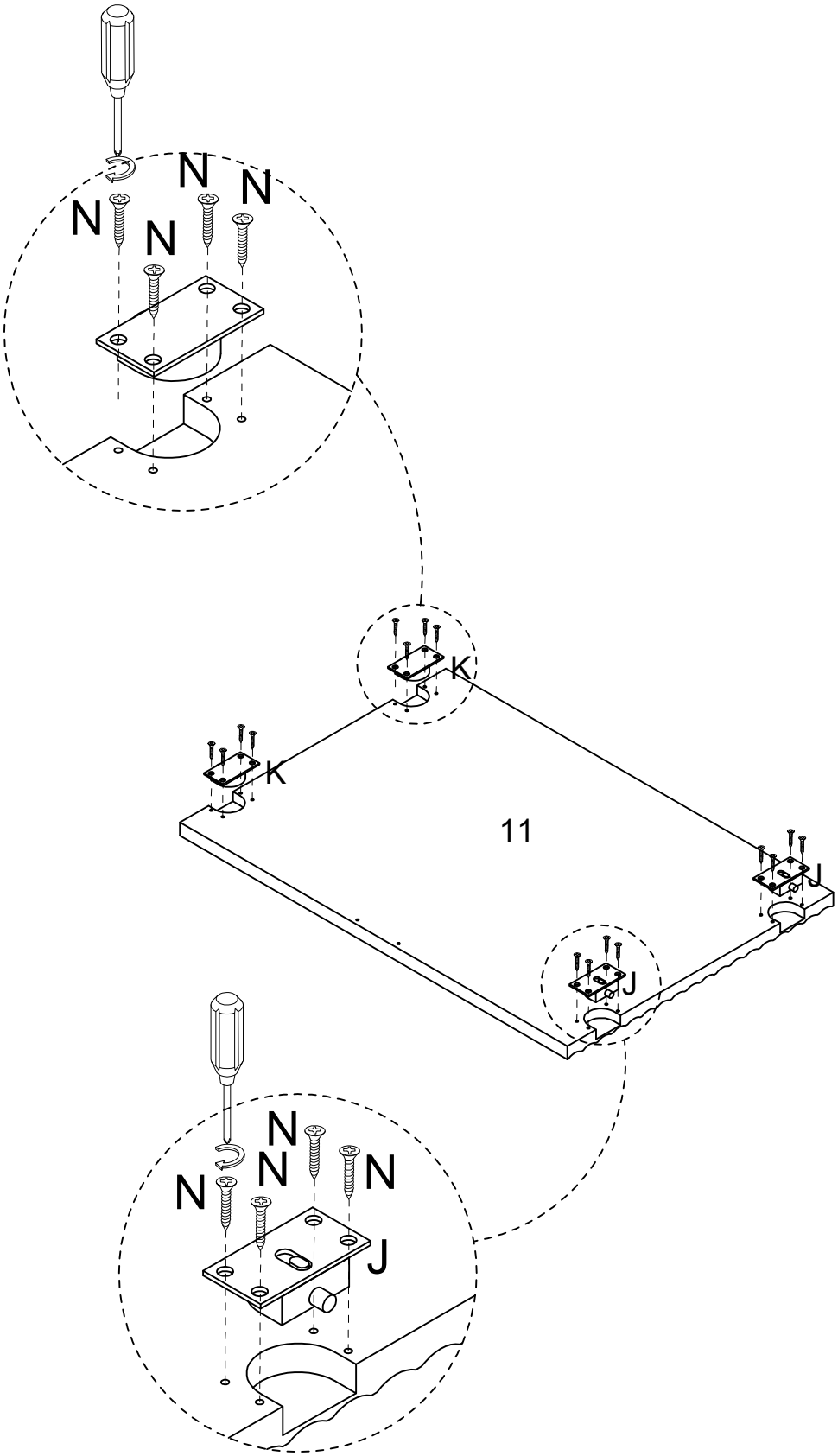

N	K	J
X16	X2	X2

Step 28

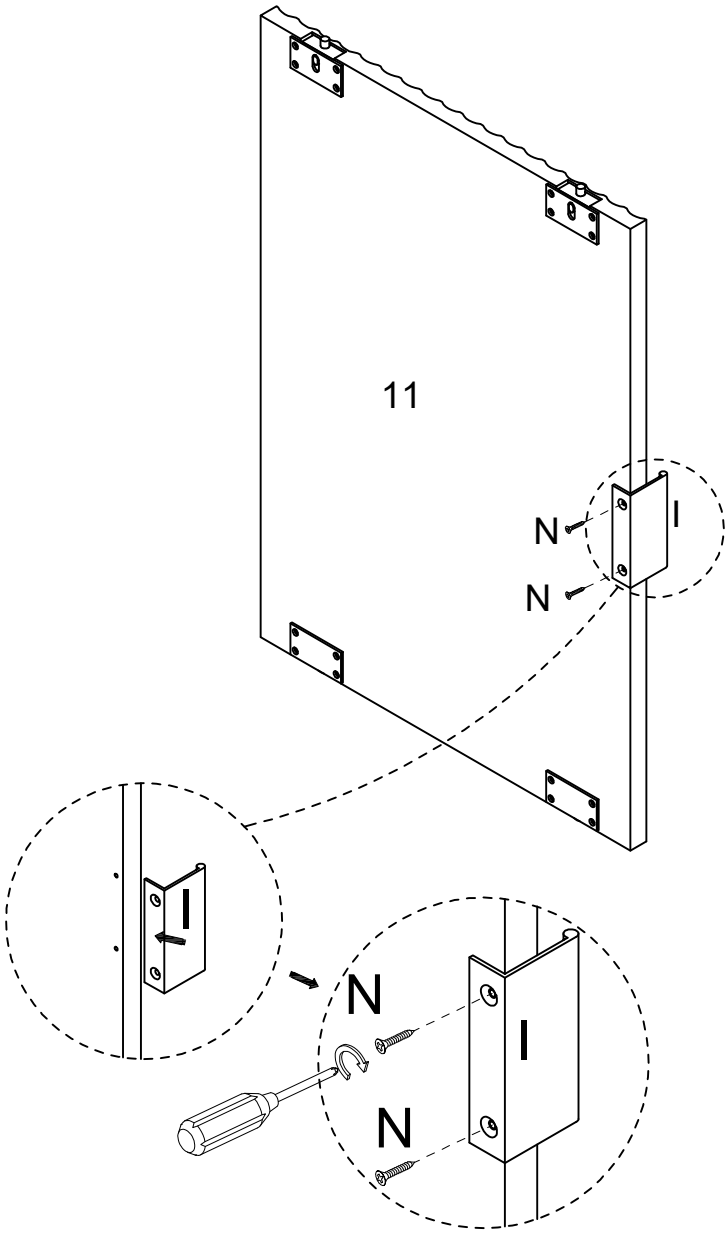

I	N
X1	X2

Step 29

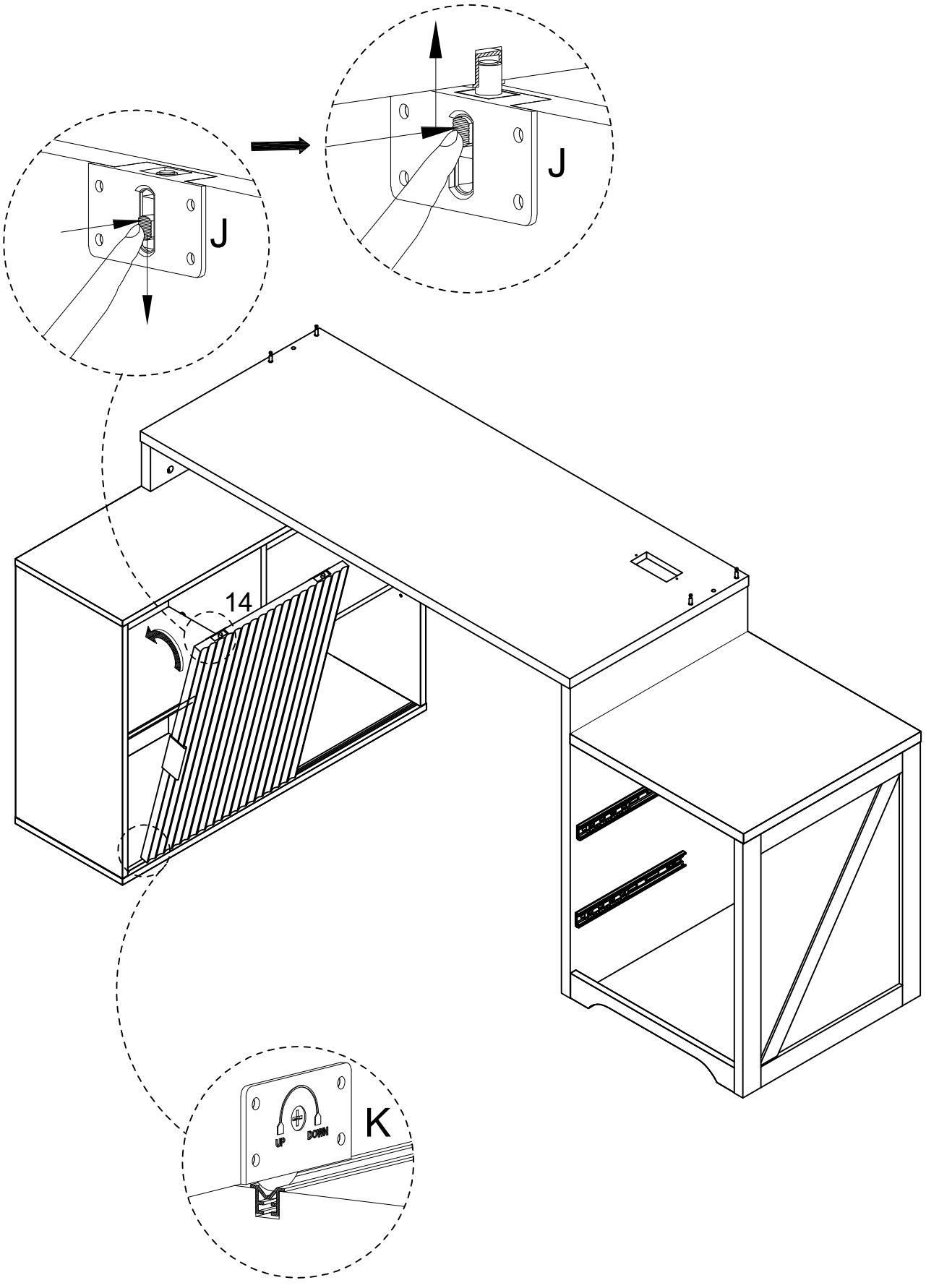

Step 30

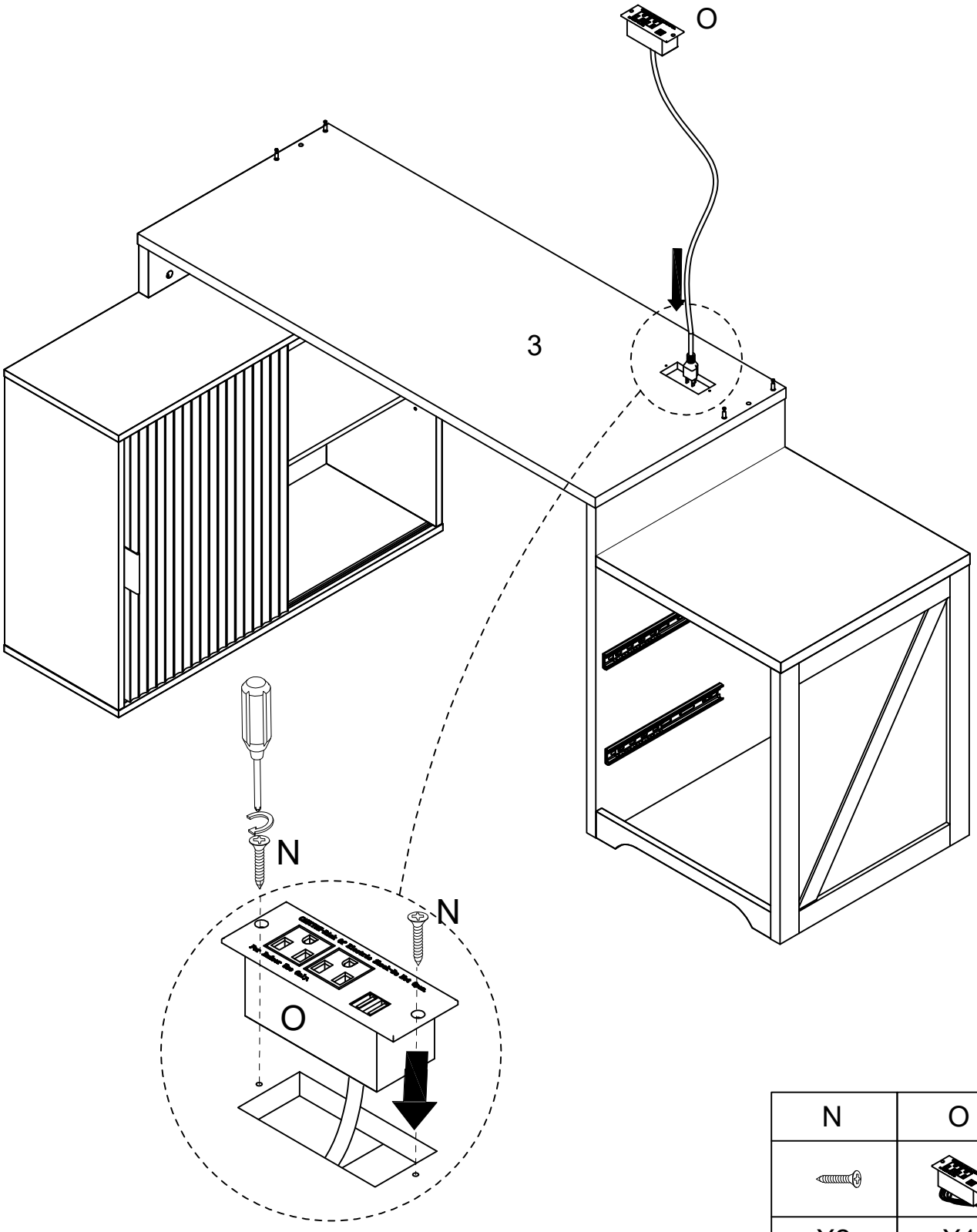

N	O
X2	X1

Step 31

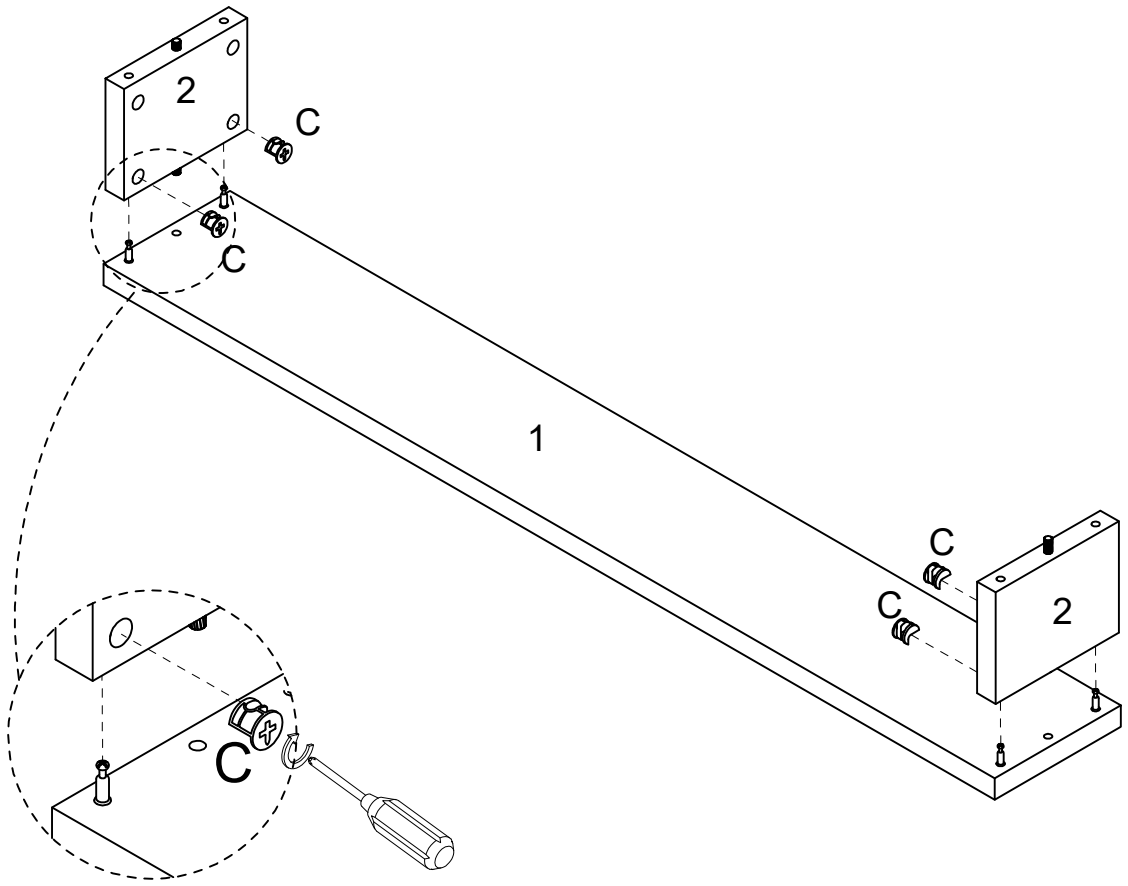

C
X4

Step 32

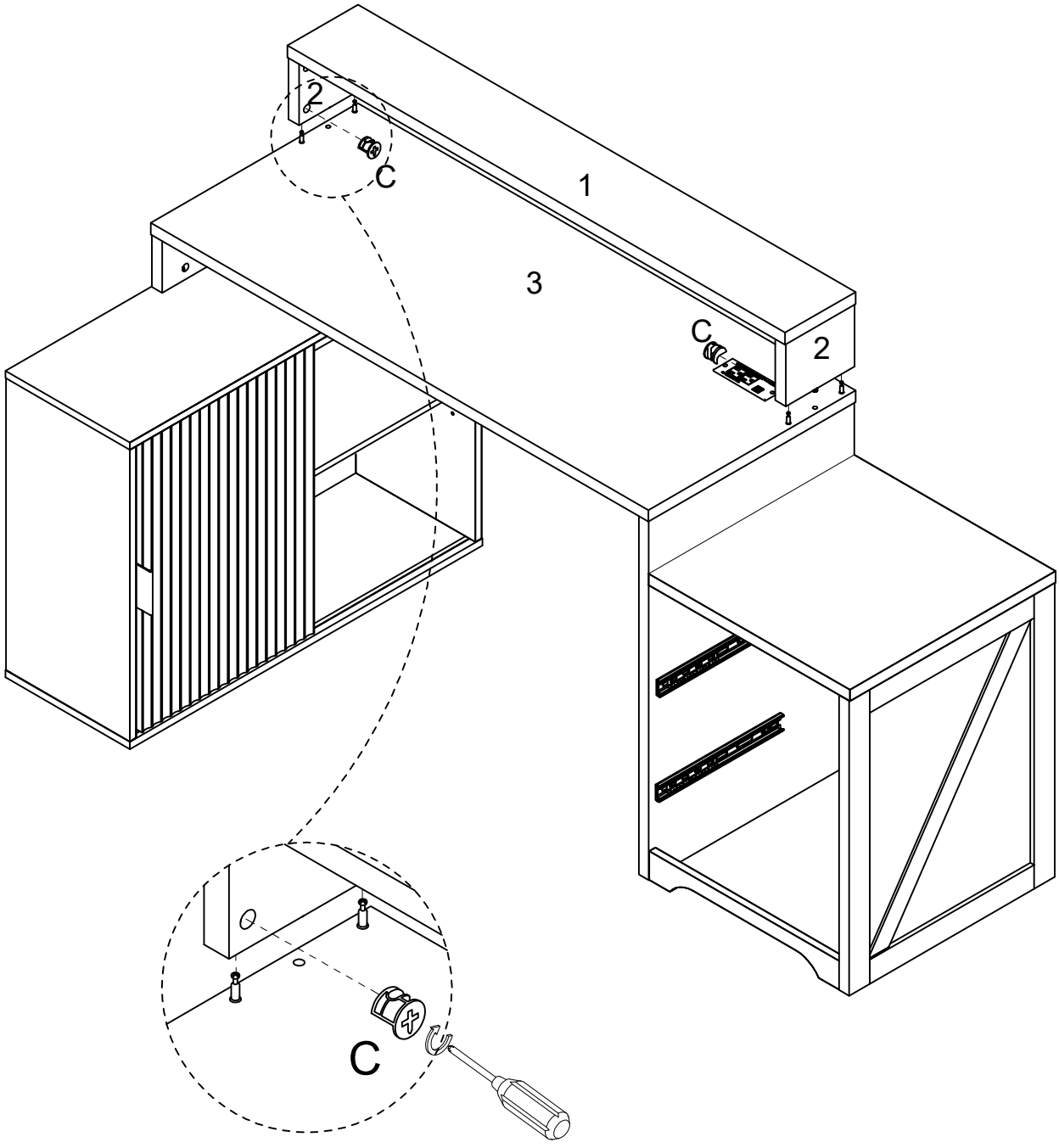

C
X4

Step 33

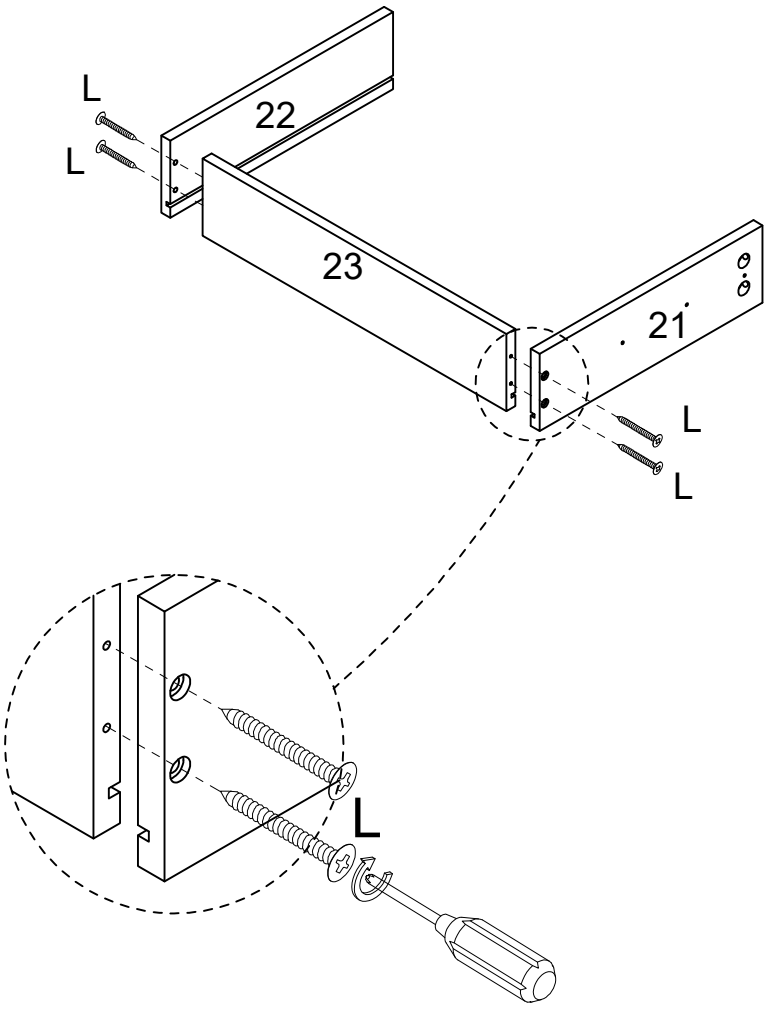

L
X4

Step 34

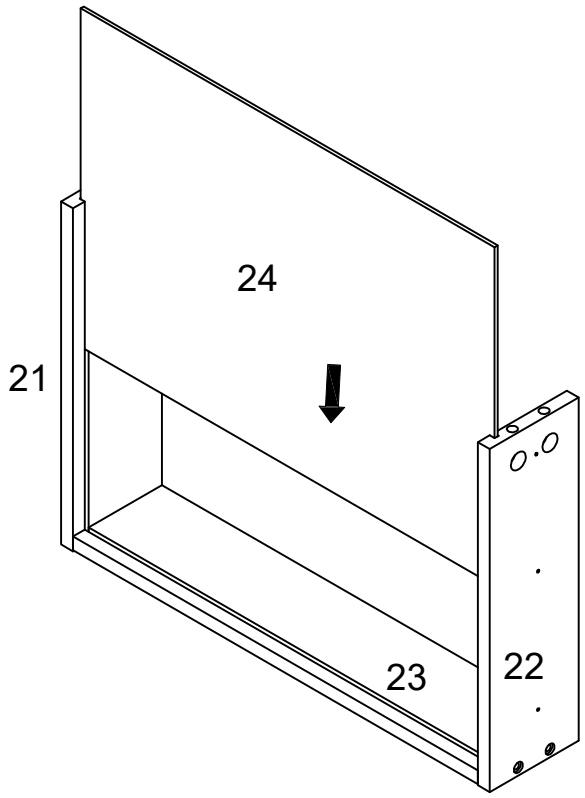

Step 35

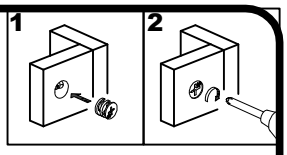

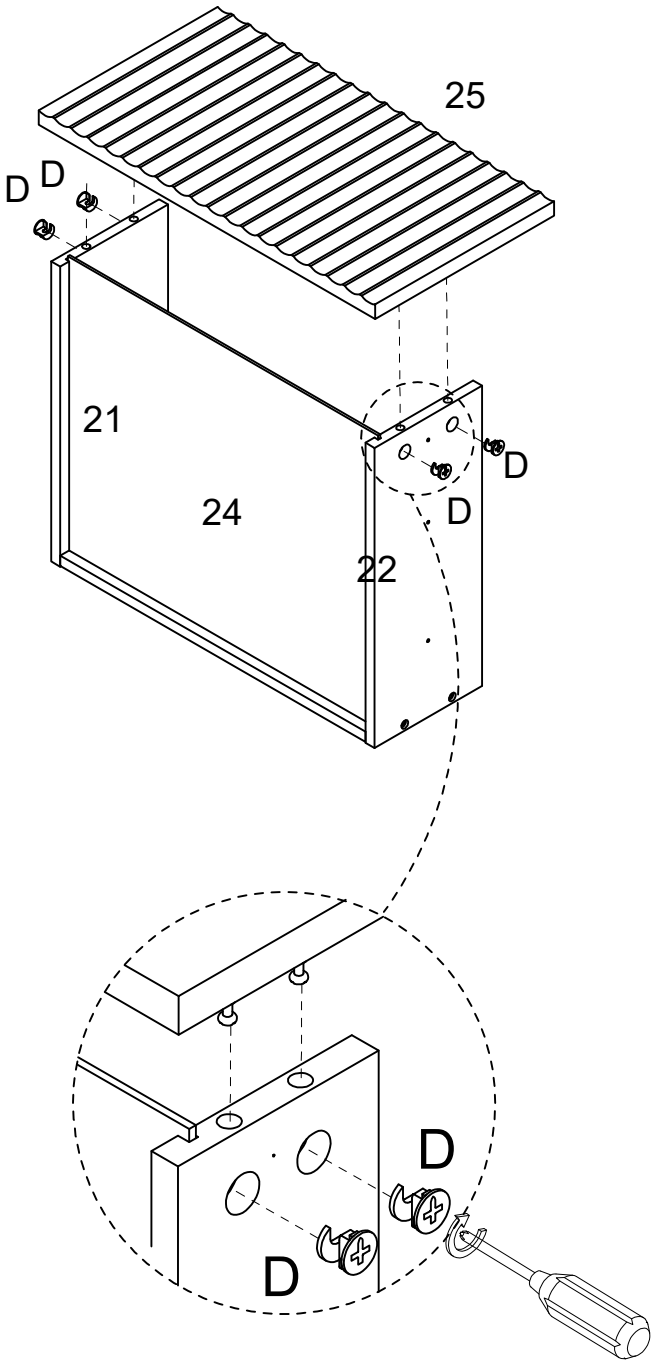

D
X4

Step 36

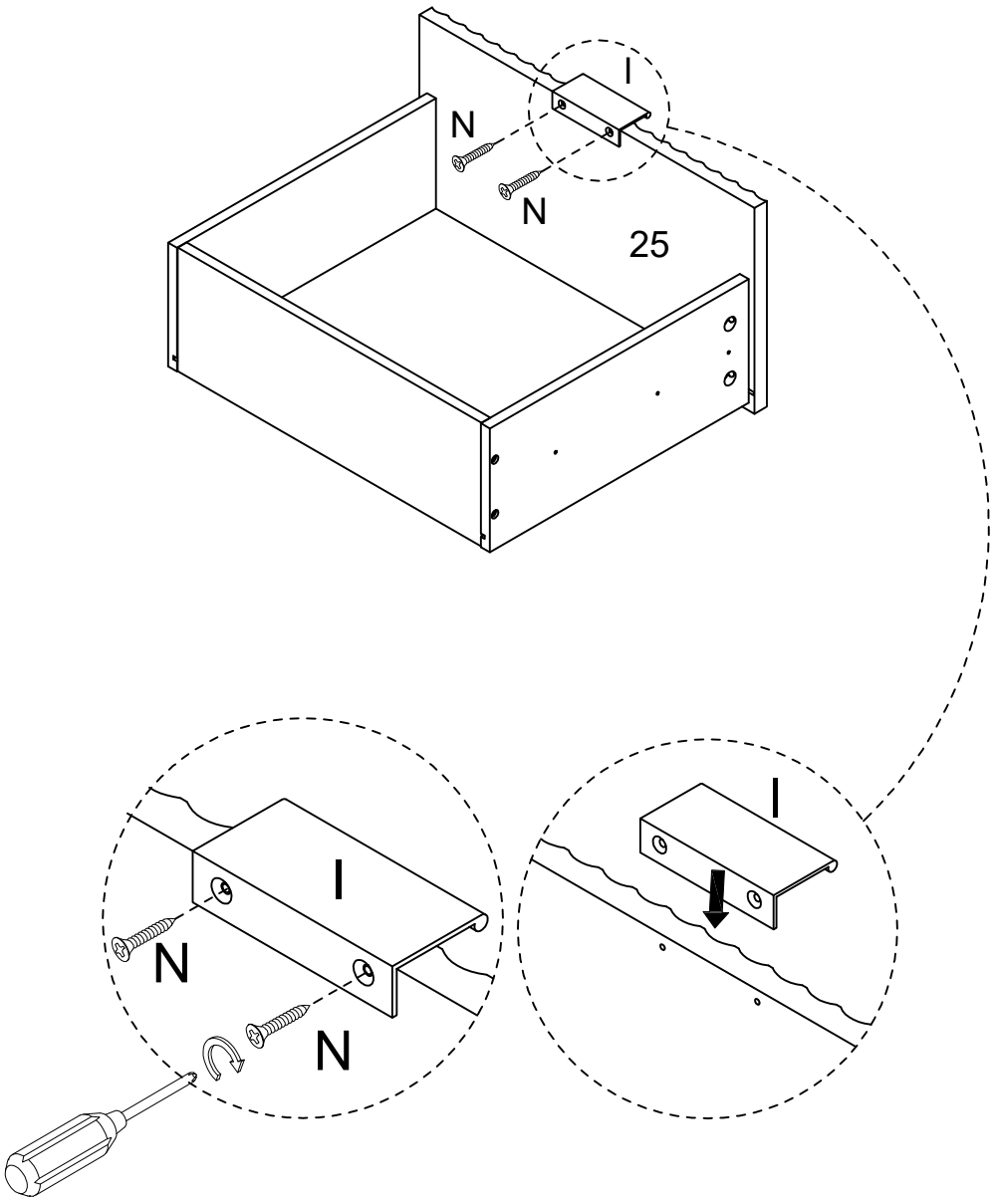

N	I
	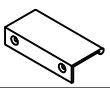
X2	X1

Step 37

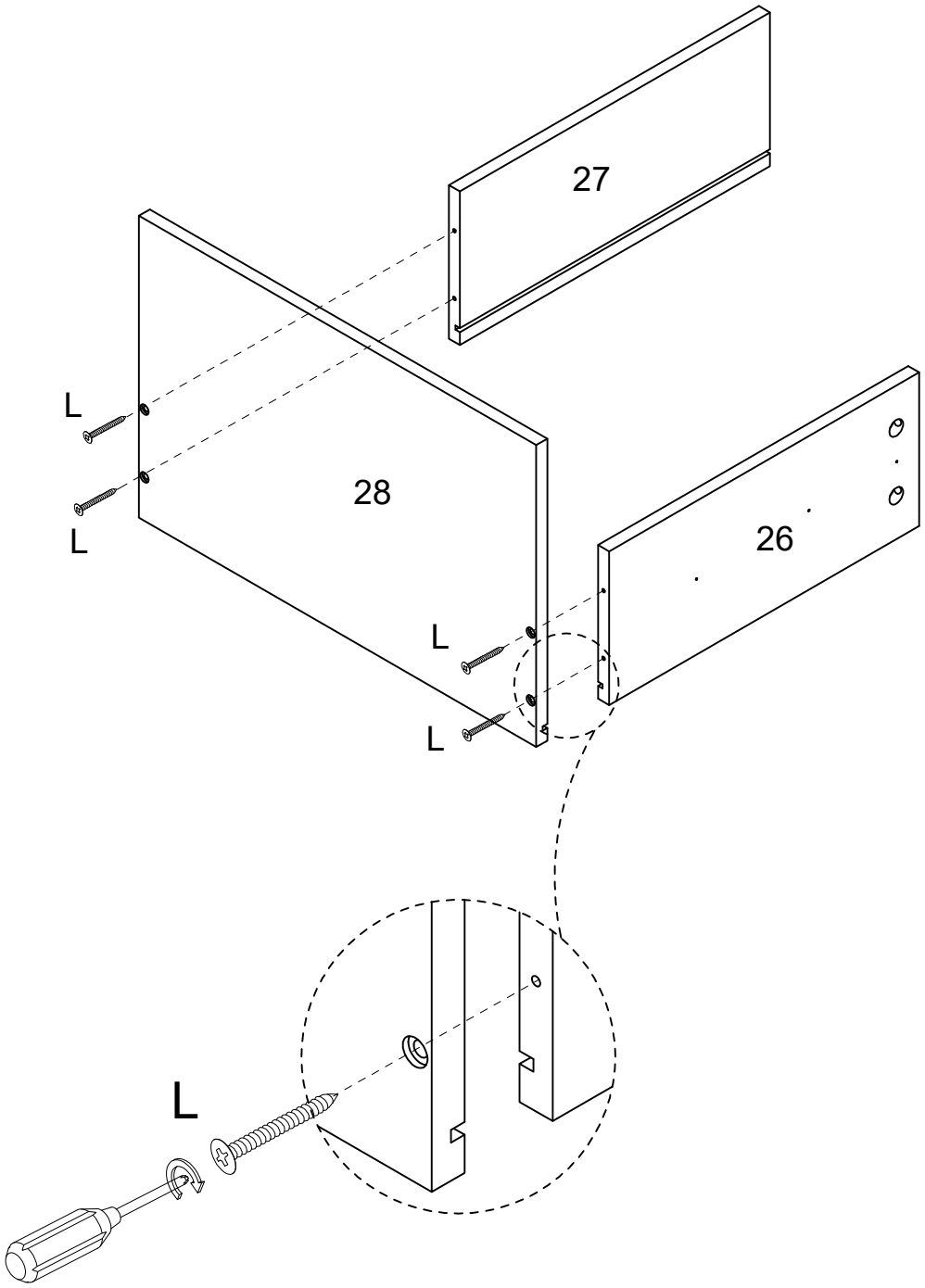

L
X4

Step 38

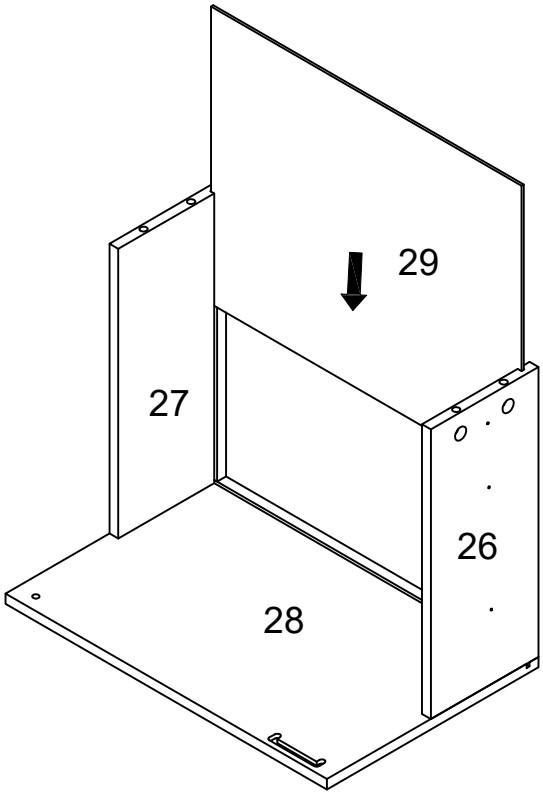

Step 39

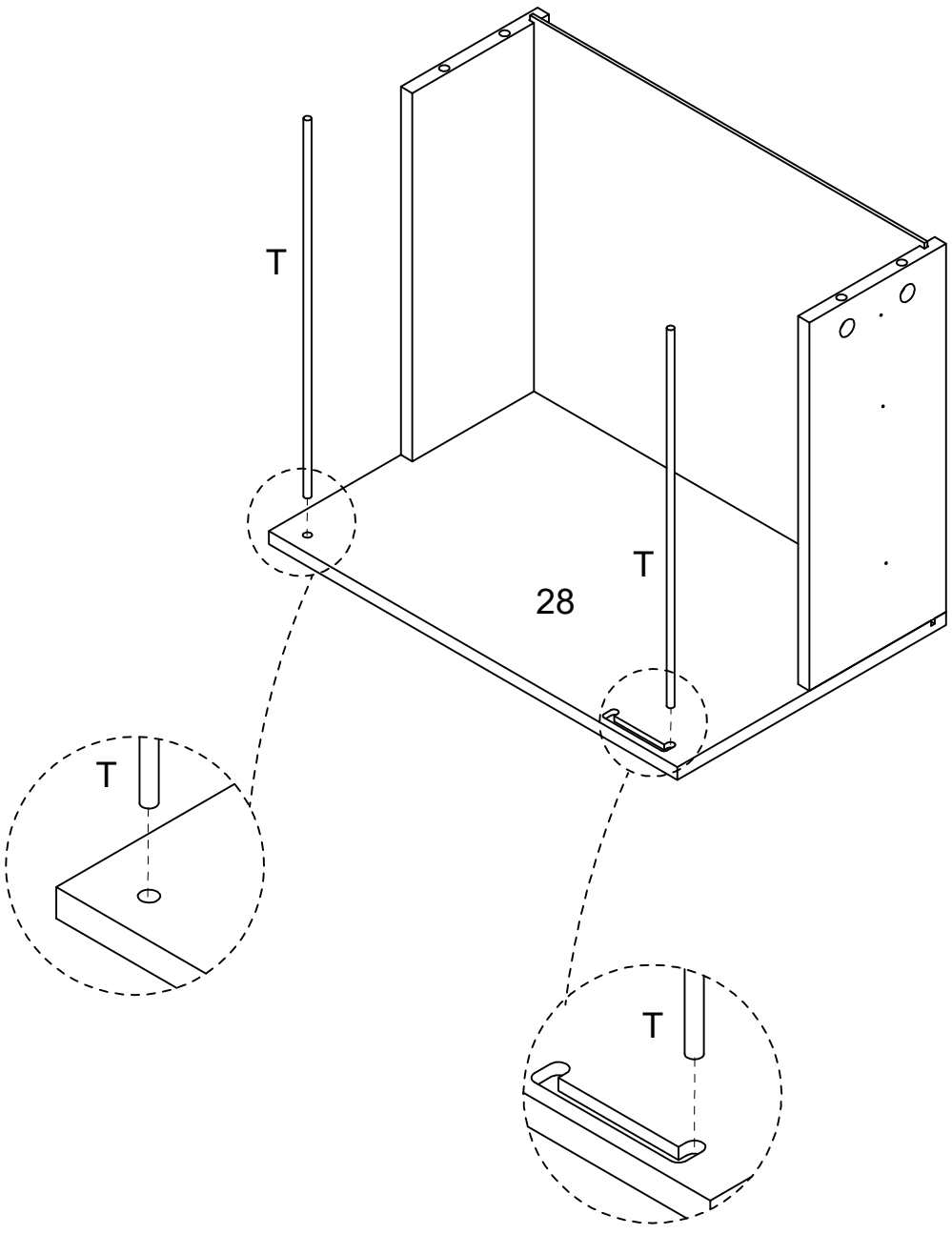

T
X2

Step 40

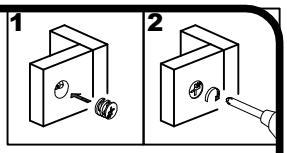

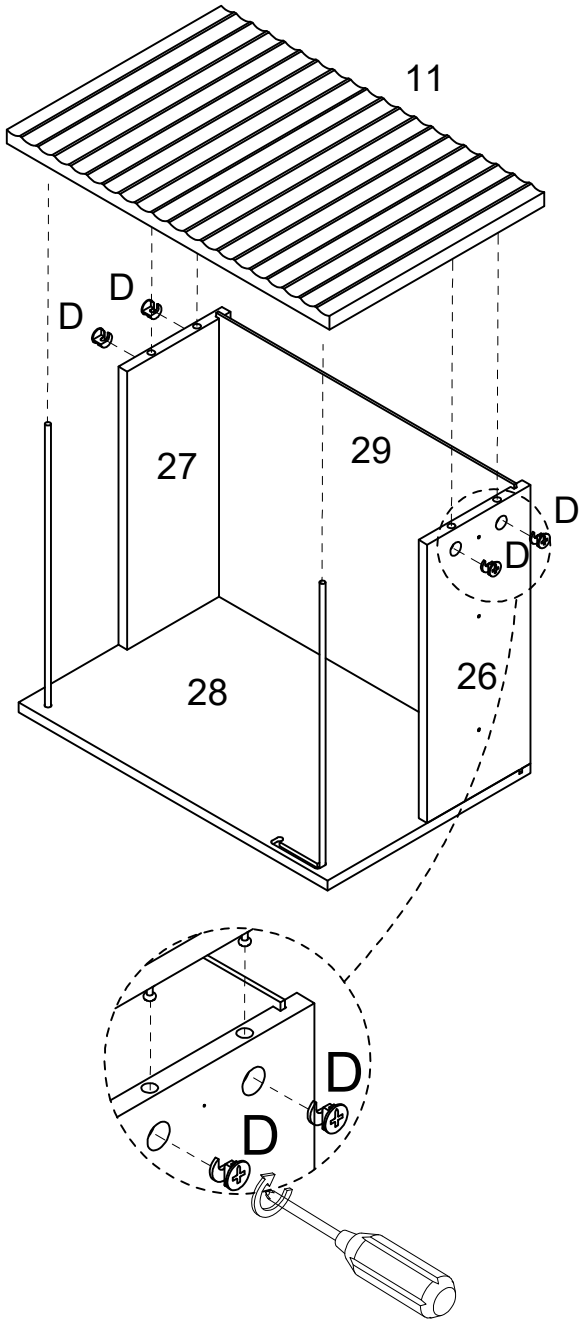

D
X4

Step 41

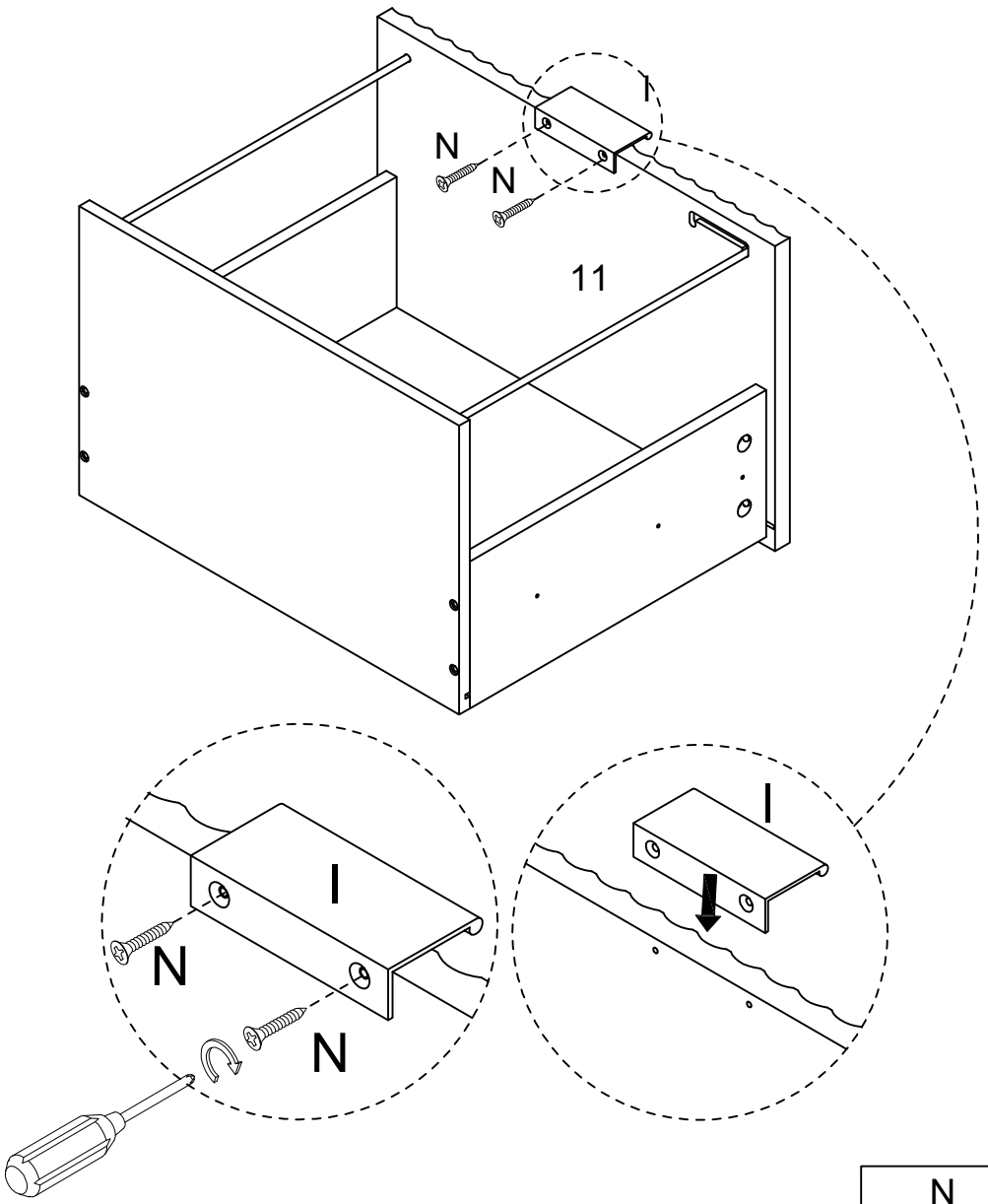

N	I
	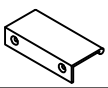
X2	X1

Step 42

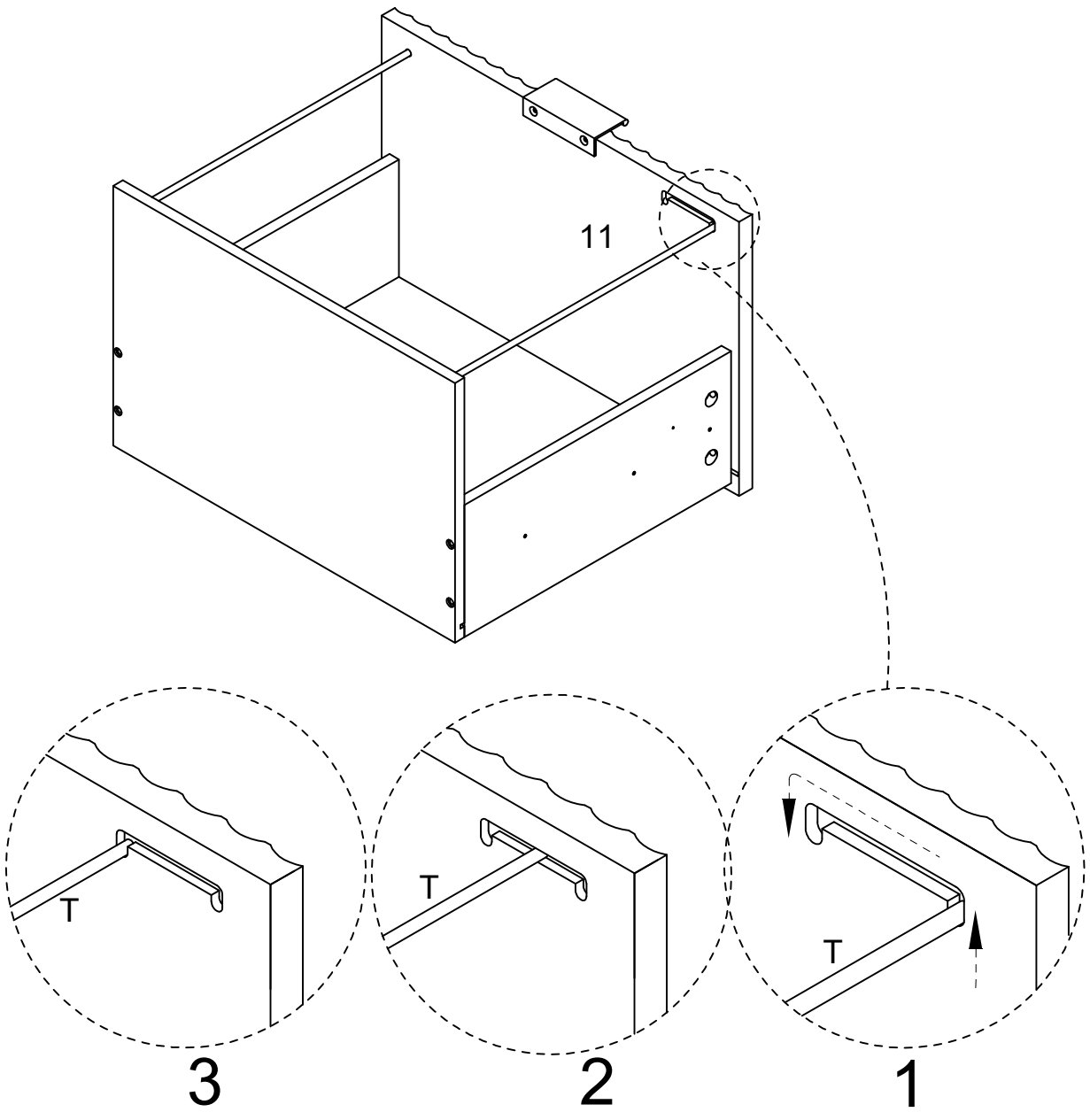

Step 43

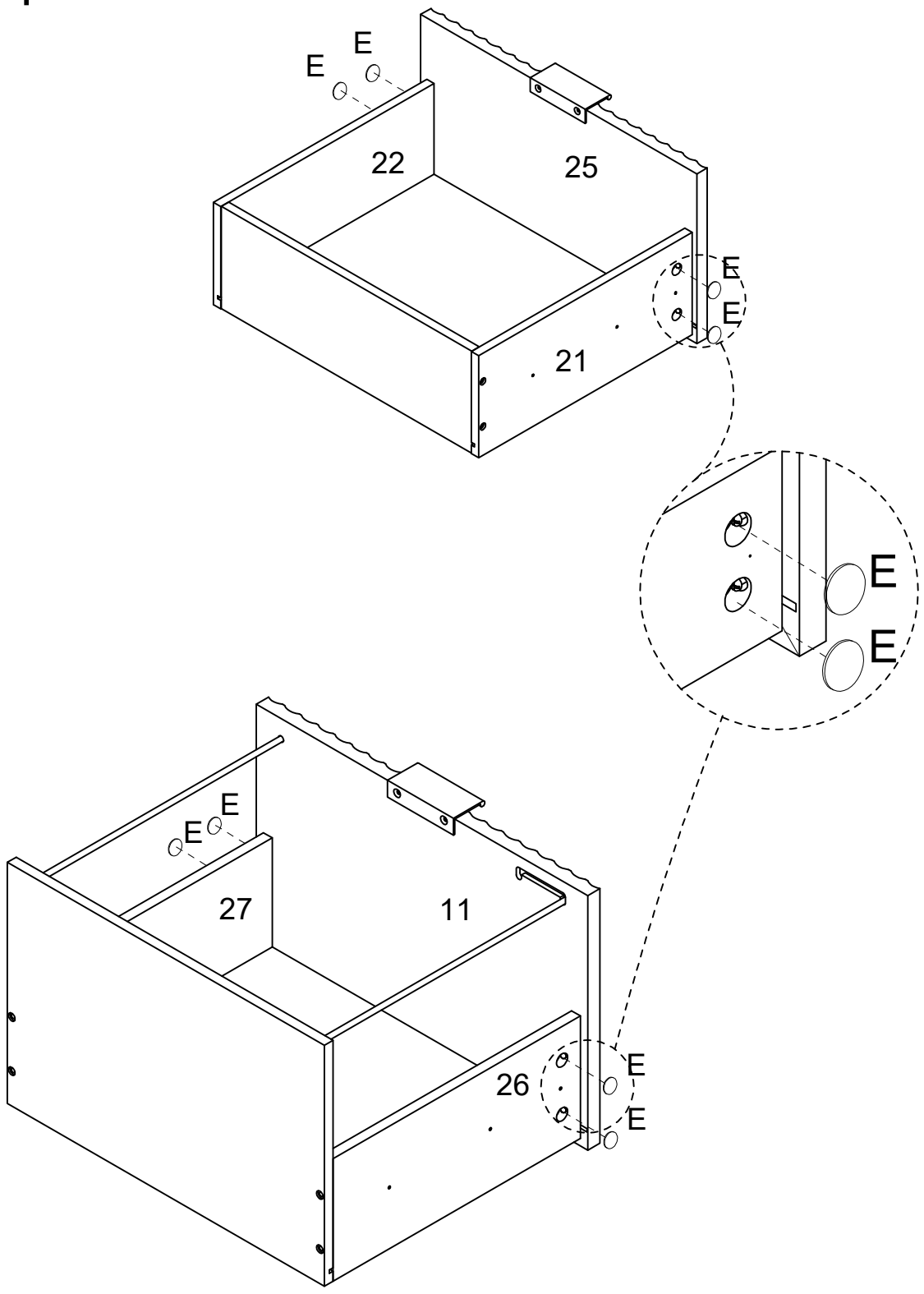

E
⬭
X8

Step 44

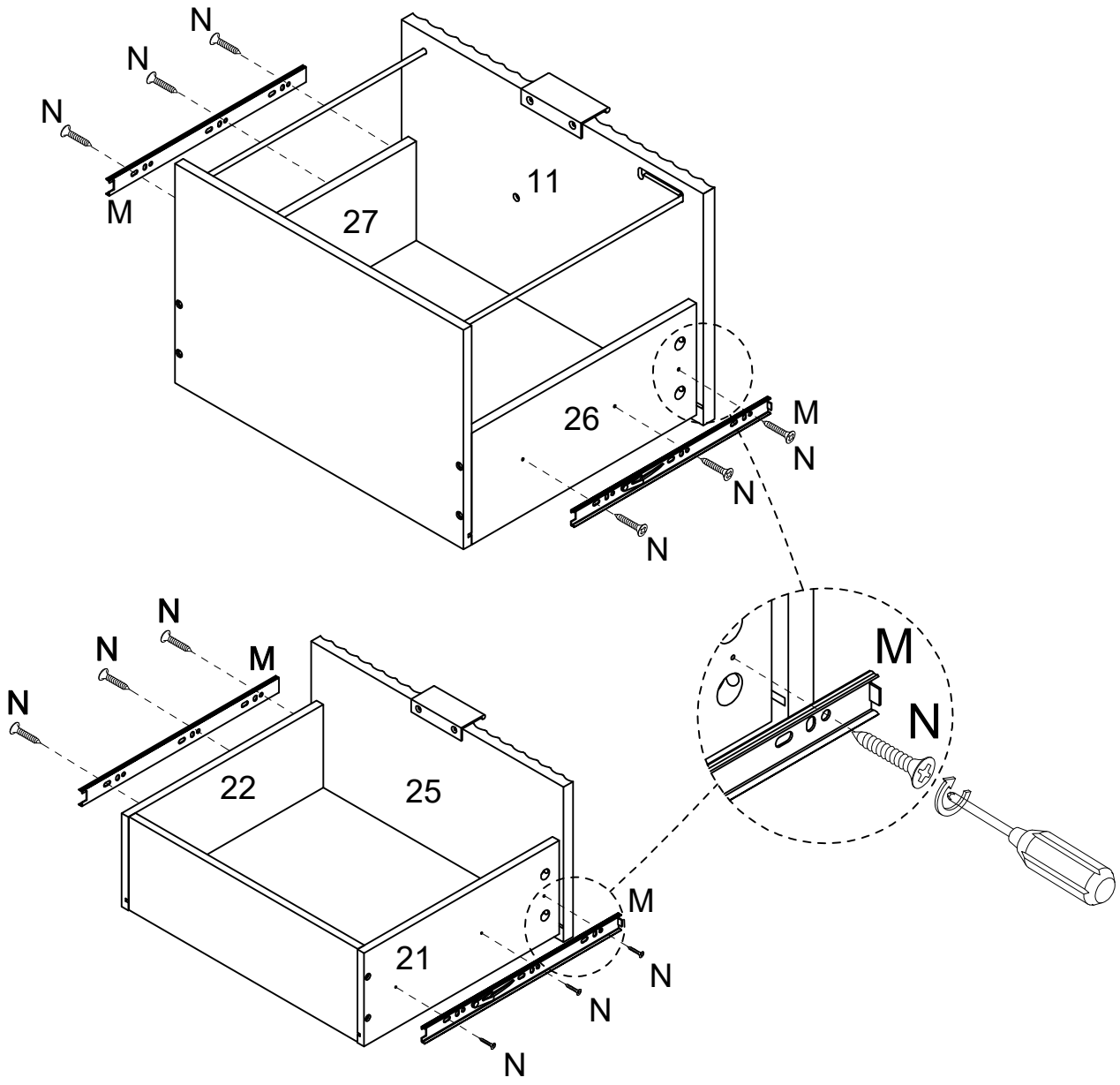

N	M
	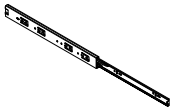
X12	X2

Step 45

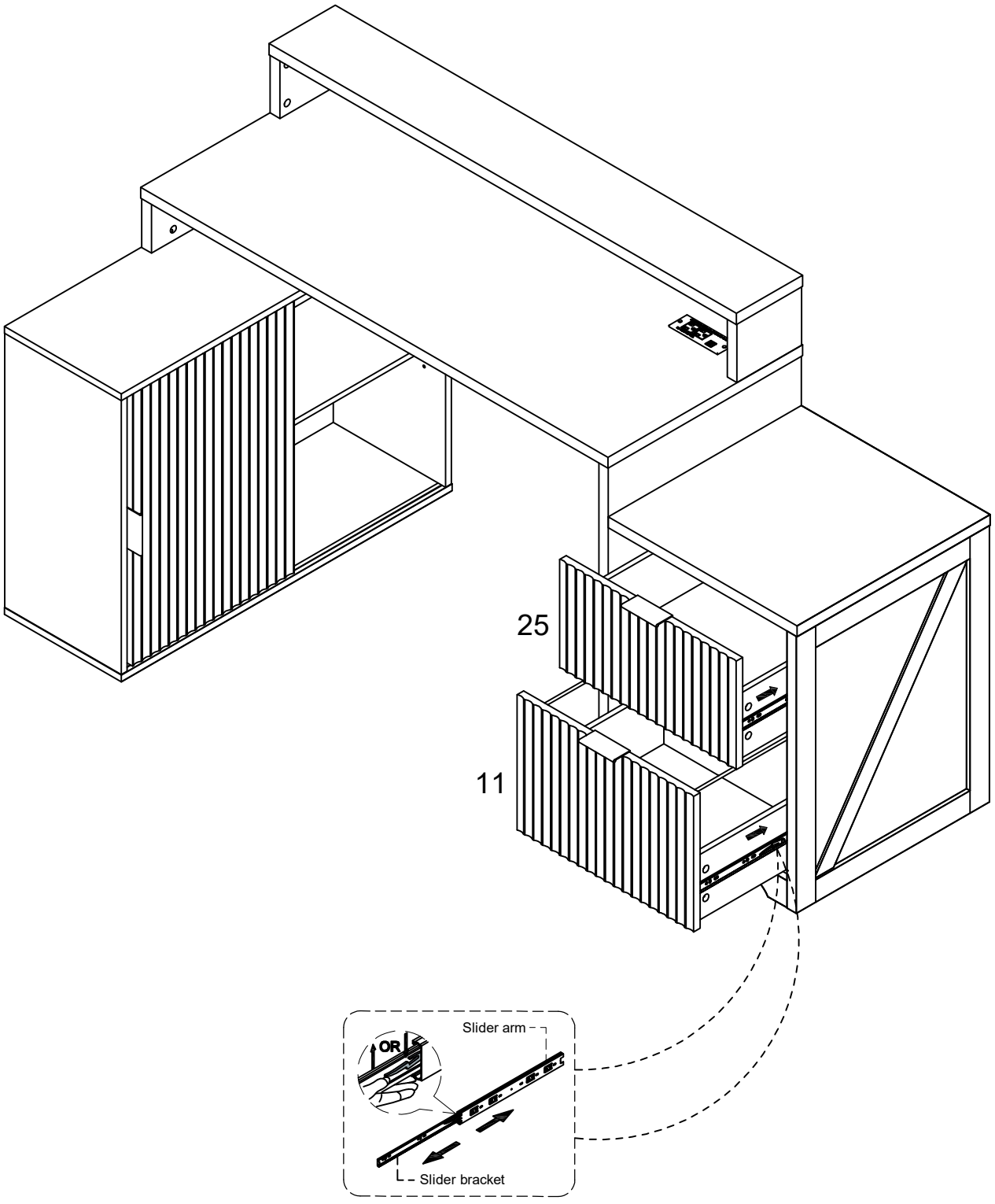

Step 46

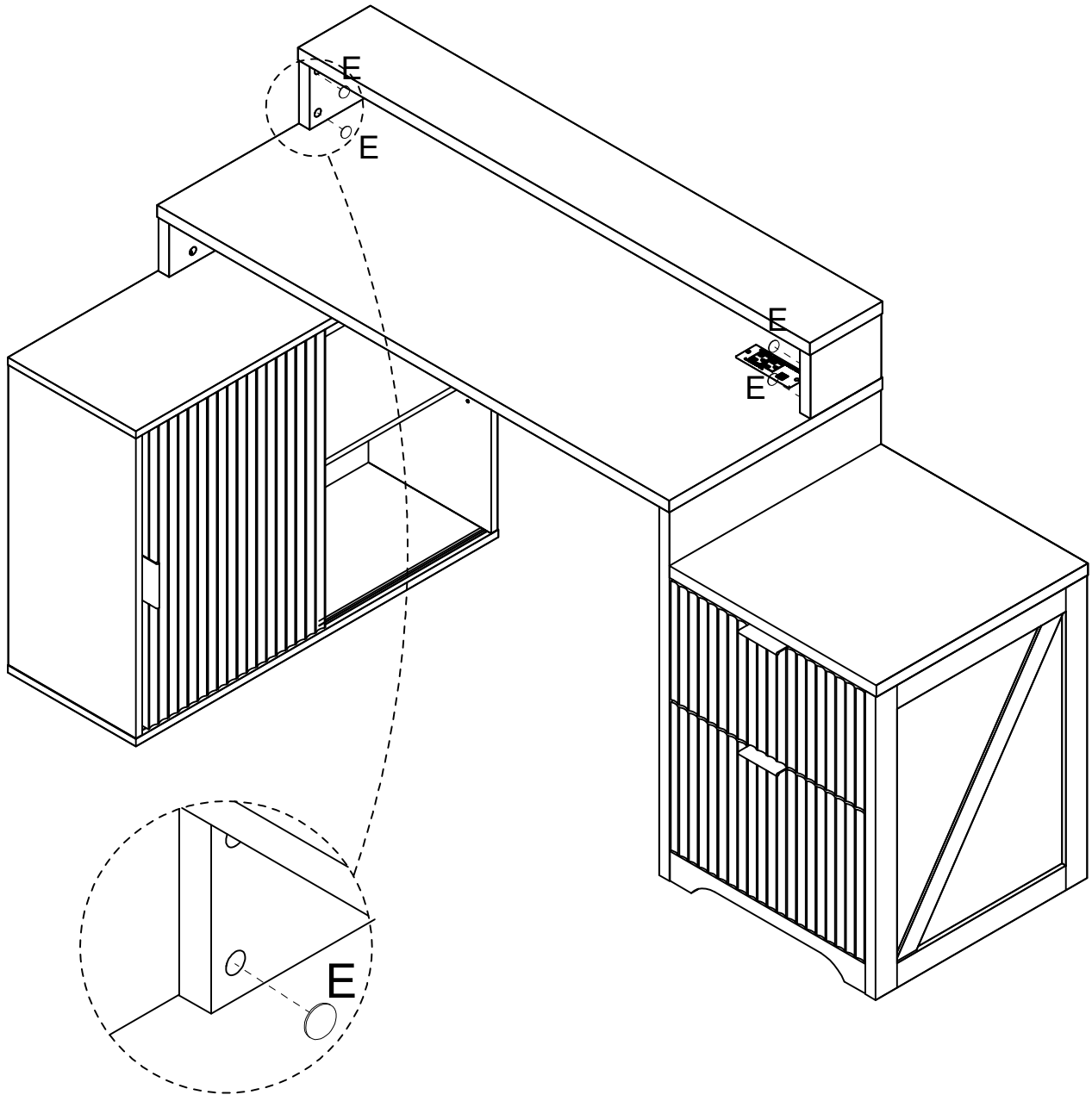

E
⬭
X8
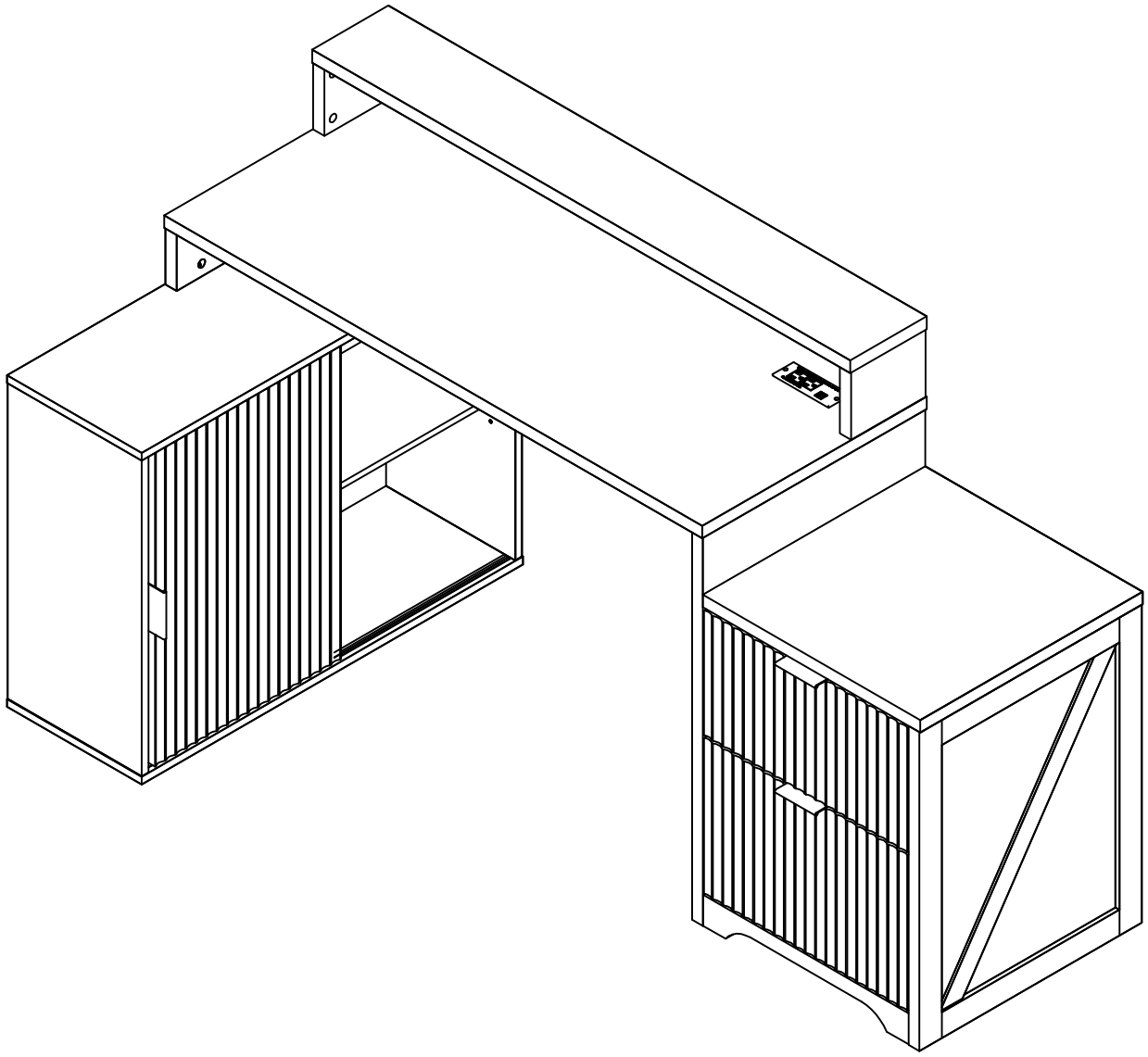
Step 47