Item # : LM037-583D

Assembly Instructions

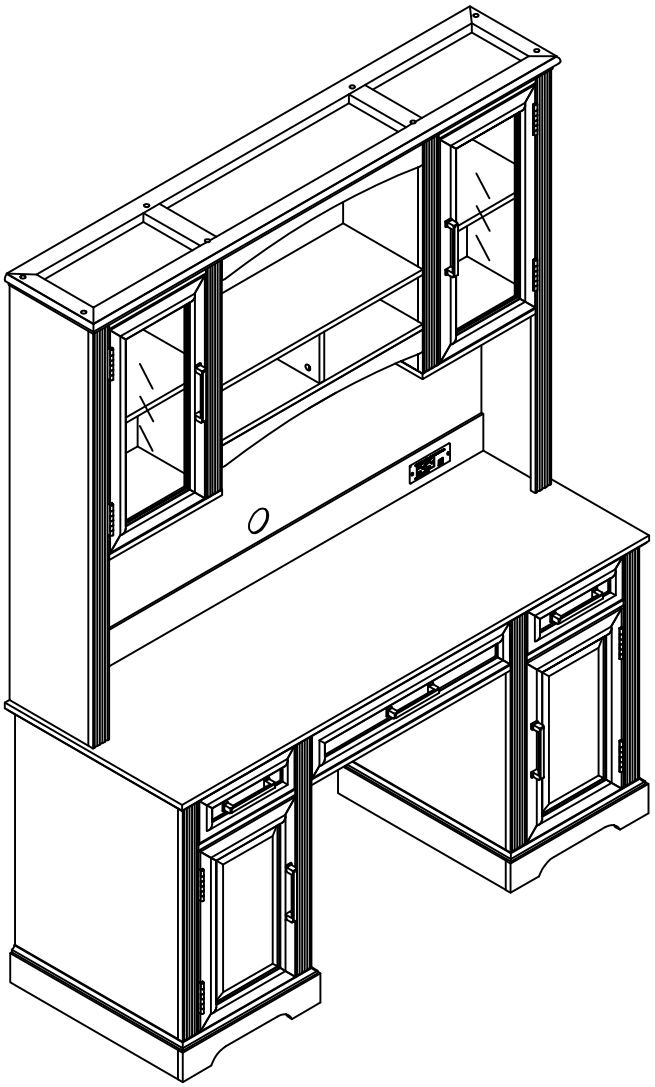

Customer Service E-mail Address: LINGMU1703583851@163.com

NOTE: There are two packages A and B for thisitem. Please wait patiently if you only receive one for now

Revsied 20/10/2023

General Assembly Guidelines

Ⅰ. Ensure that all parts and hardware are available before beginning assembly.

Ⅱ. Follow each step carefully to ensure the proper assembly of this product.

Ⅲ. Two people are recommended for ease in the assembly of this product.

Ⅳ. The three main types of hardware used to assemble this product are : wood dowels , screws and bolts.

Ⅴ. The provided glue is to secure wood dowels in place . When first inserting dowels , locate the appropriate hole for the dowel , place a small amount of glue in the hole and insert the dowel . Wipe away excess glue immediately.

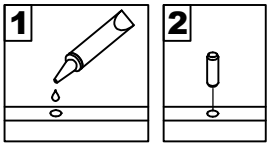

In future assembly steps when dowels are necessary to attach assembly parts together , place a small amount of glue on the end of the dowel before attaching parts together . Wipe away excess glue immediately.

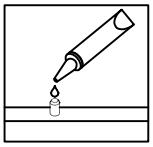

Ⅵ. A Phillips head screwdriver is required for the assembly of this product .

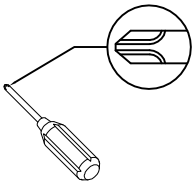

Ⅶ. Power tools should not be used to assemble this product .

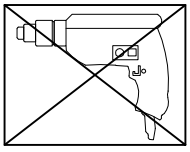

Ⅷ. Concealed hinges are three-way adjustable.

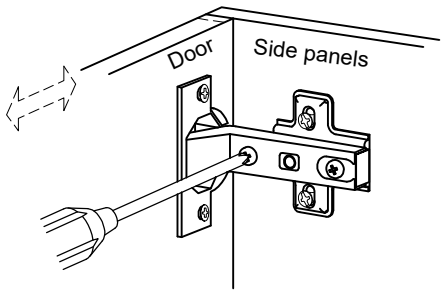

Horizontal
by screw adjustment

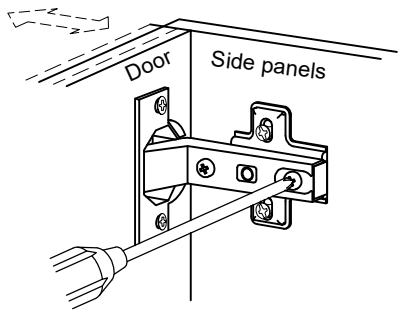

In-and-Out
by loosening the hinge-arm mounting screw or via cam adjustment

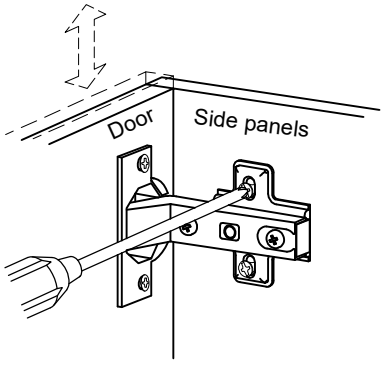

Vertical
Via slots in the mounting plate or via cam adjustment

Parts List

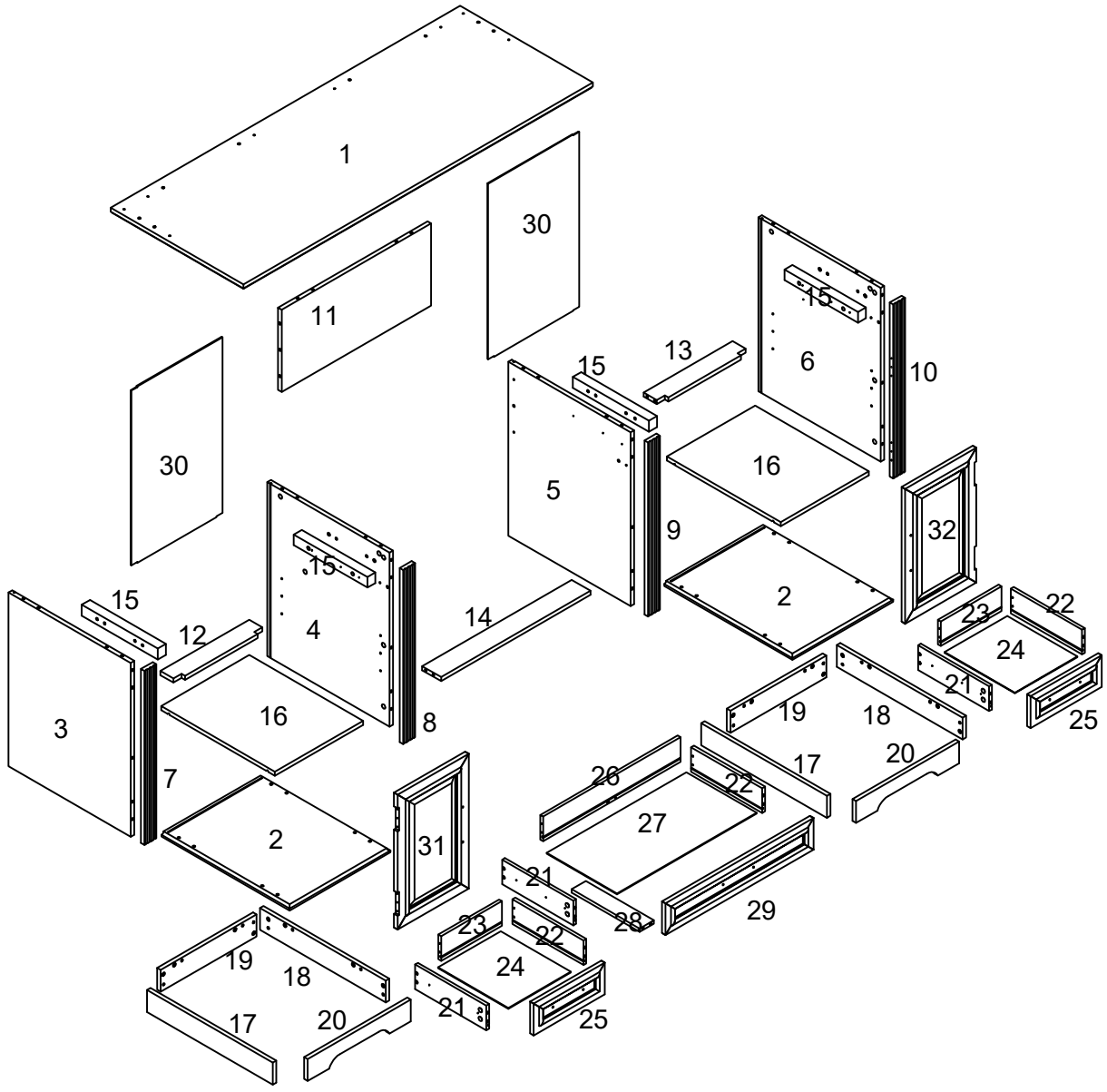
1
30
11
30
15
13
6
10
15
5
16
9
32
15
4
14
2
15
12
23
22
24
3
16
8
21
19
18
25
7
17
20
26
22
27
2
31
21
28
29
23
22
24
19
18
21
25
17
20

Parts List

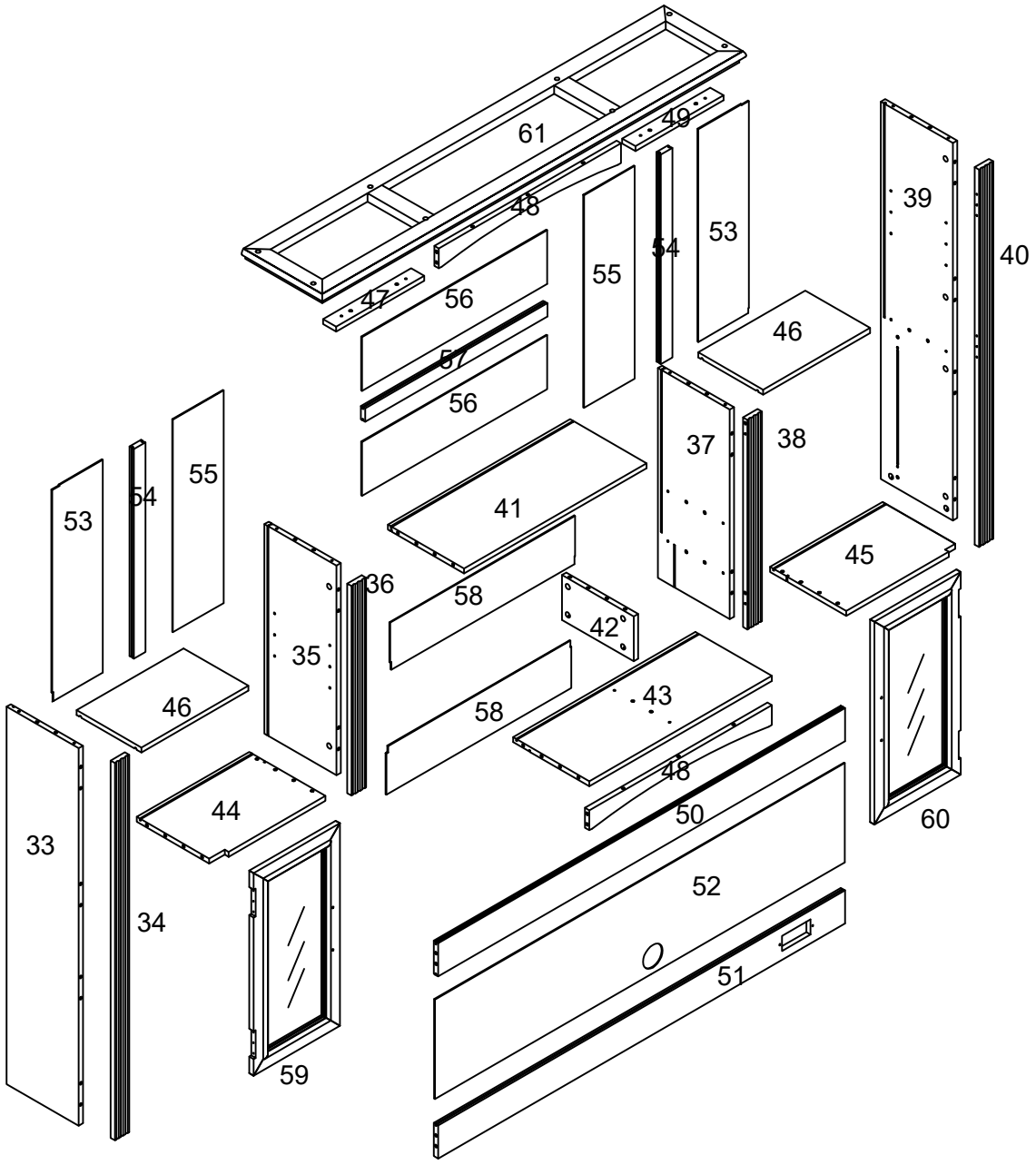
61
49
48
47
56
55
54
53
39
40
46
57
56
37
38
41
53
54
55
45
36
58
42
35
46
58
43
48
50
60
44
33
52
34
51
59

Hardware List

A		Ø8x30mm	Wooden dowel	106	pcs
B	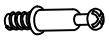	Ø6x32mm	Cam lock	93	pcs
C		Ø15x11mm	Cam lock	80	pcs
D		Ø15x9mm	Cam lock	13	pcs
E		Ø30mm	Sticker	93	pcs
F	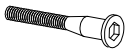	Ø6x50mm	Bolt	20	pcs
G		M 4	Hex Key	2	pc
H		M6*12mm	Screw	48	pcs
I			Angular Code	24	pcs
J			Hold hands	7	pcs
K		Ø4x9mm	Screw	6	pcs
L		Ø4x19mm	Screw	8	pcs
M		Ø8x5x16mm	Shelf support pin	16	pcs
N			Bolt	4	pcs
O		Ø3x15mm	Screw	8	pcs
P			Door stopper	4	pcs
Q			Hinge	8	pcs
R		Ø3.5x15mm	Screw	64	pcs
S		Ø4x32mm	Screw	13	pcs

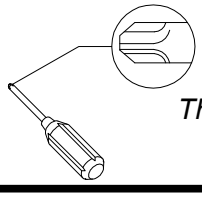

Philips head screwdriver required for assembly
(not included)

The hardware quantities listed above are required for proper assembly.
Some extra hardware may also have been included.

Hardware List

T		Ø3x17mm	Screw	40 pcs
U			Plastic wedge	40 pcs
V		Ø3x12mm	Screw	36 pcs
W		Individually packed	Drawer slider	3 pcs
X			Small White Glue	2 pcs
Y		Ø8x20mm	Wooden dowel	4 pcs
Z		M6*35mm	Screw	8 pcs
AA		M6*13	gaskets	8 pcs
BB			Electric socket	1 pc
CC		Ø3x12mm	Screw	2 pcs
DD		Ø4x25mm	Screw	4 pcs

Breakdown of total quantity of A-packaging hardware and B-packaging hardware

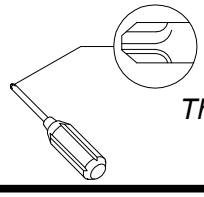

Philips head screwdriver required for assembly (not included)

The hardware quantities listed above are required for proper assembly. Some extra hardware may also have been included.

Step 1

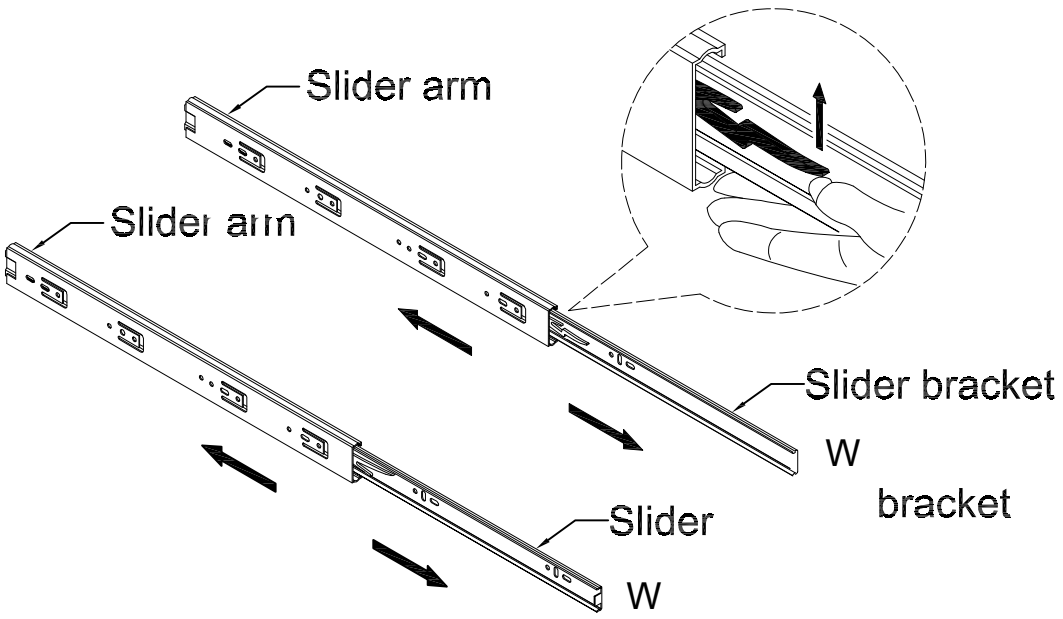

Put slider bracket into slider arm as per diagram.

Step 2

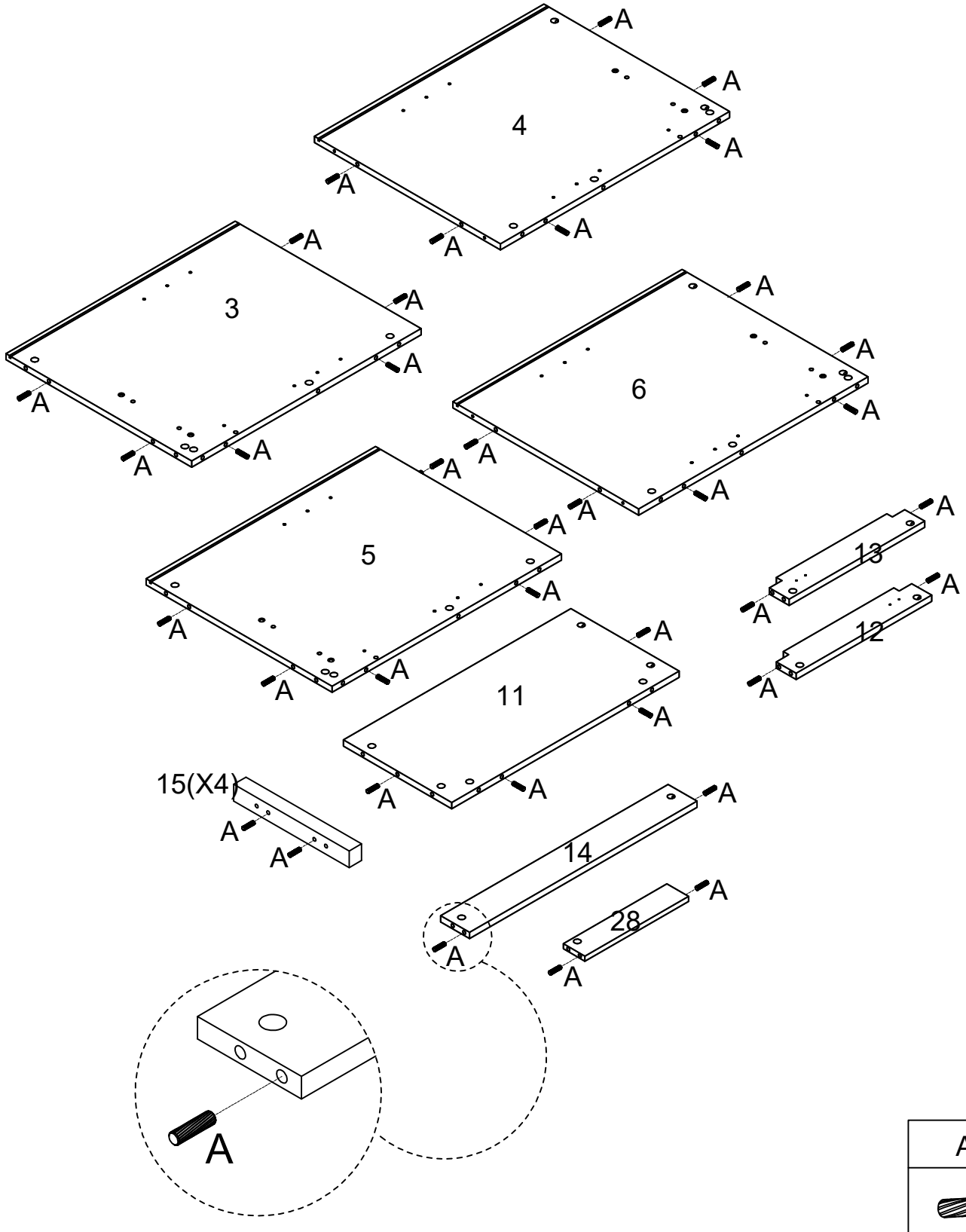

A
X44

Step 3

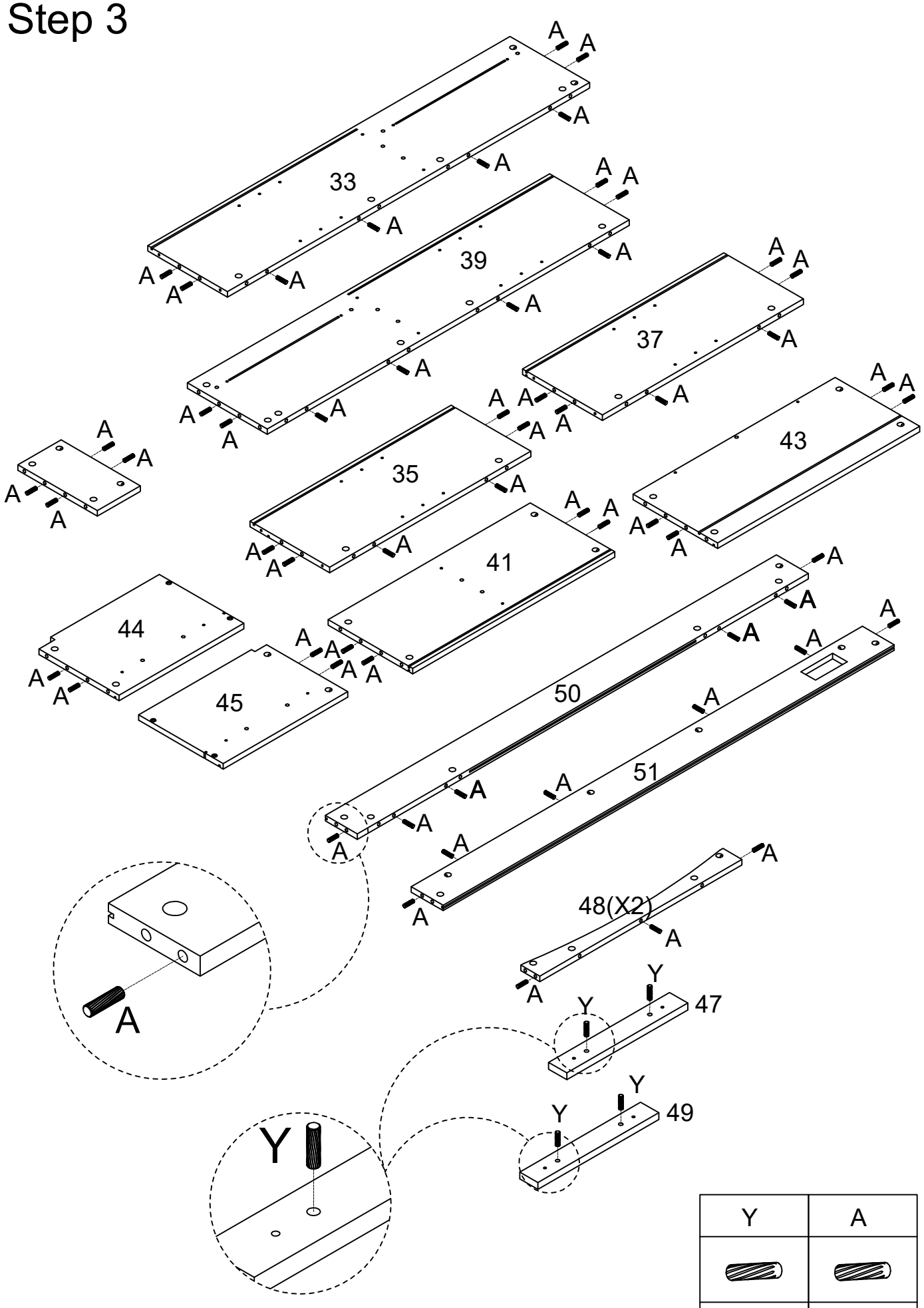

Y	A
X4	X62

Step 4

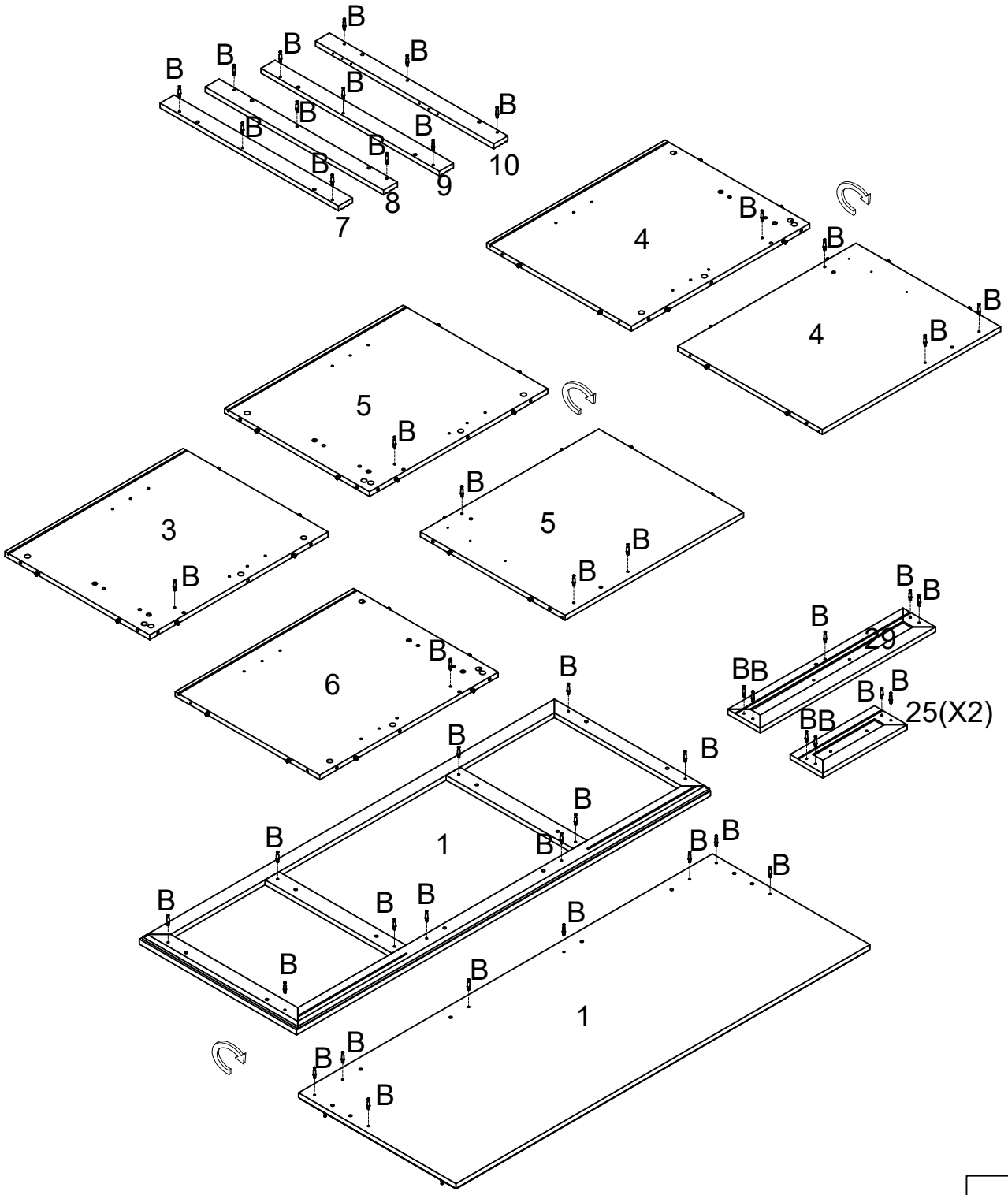

B
X53

Step 5

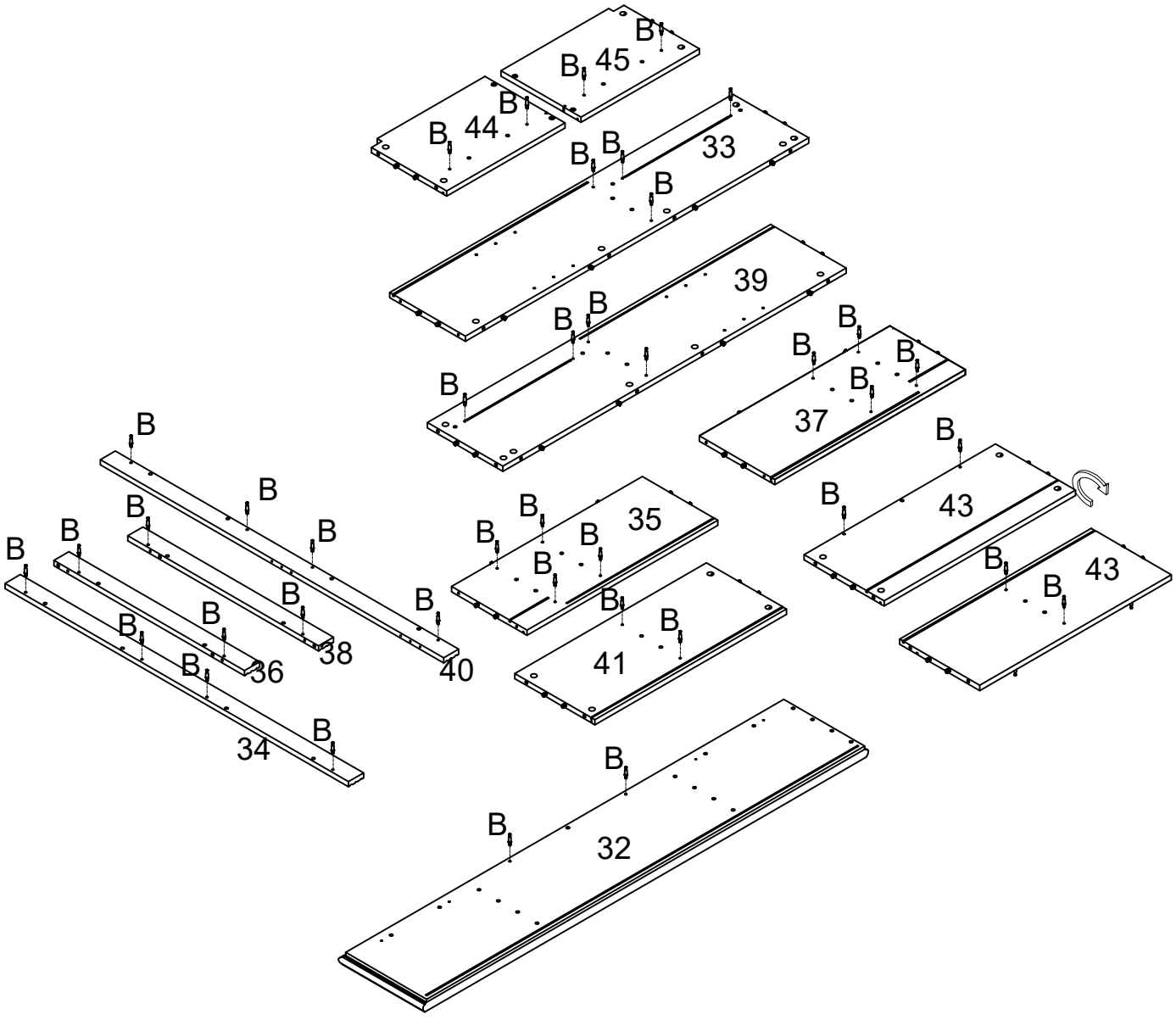

B
X40

Step 6

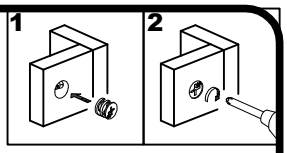

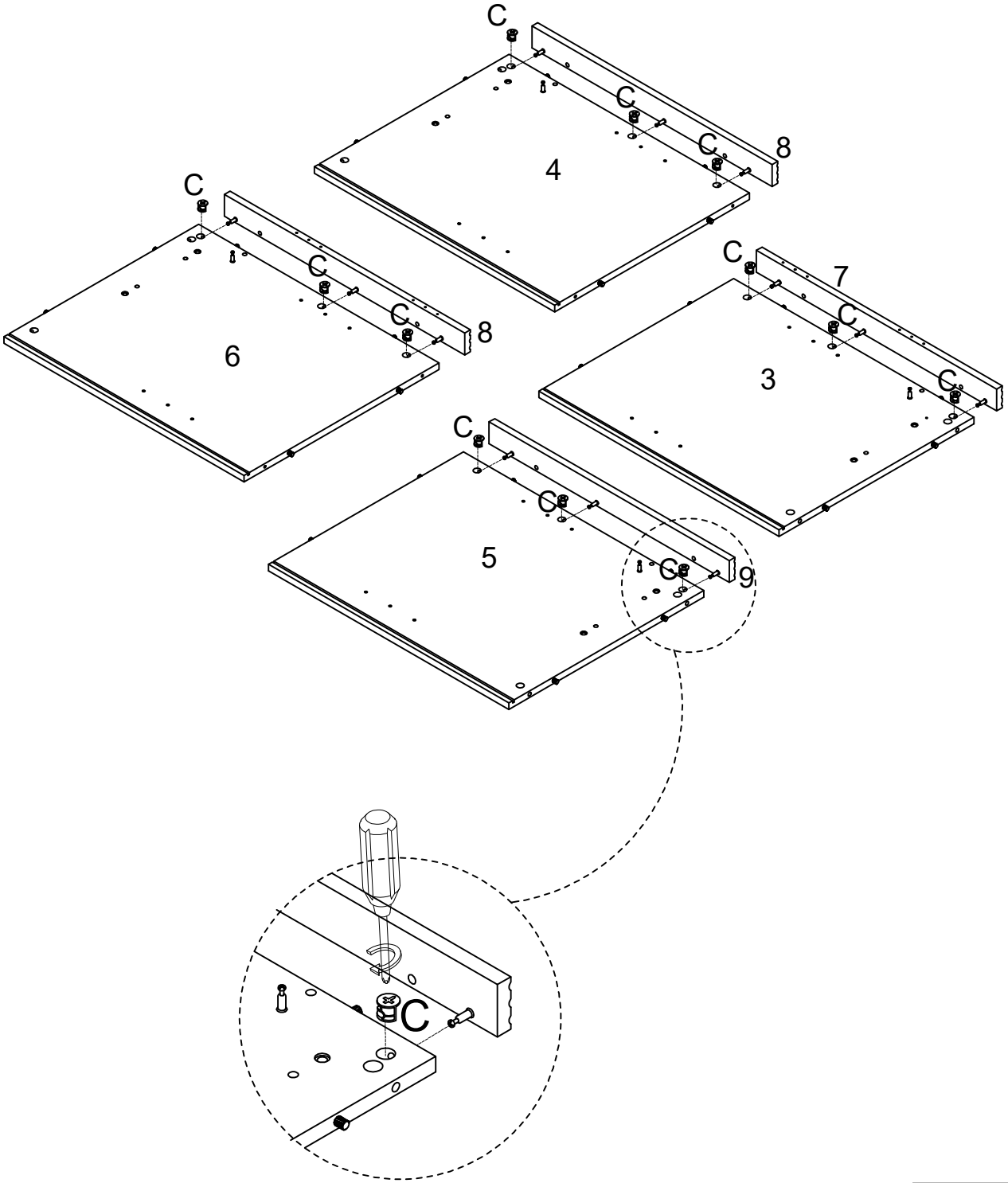

C
X12

Step7

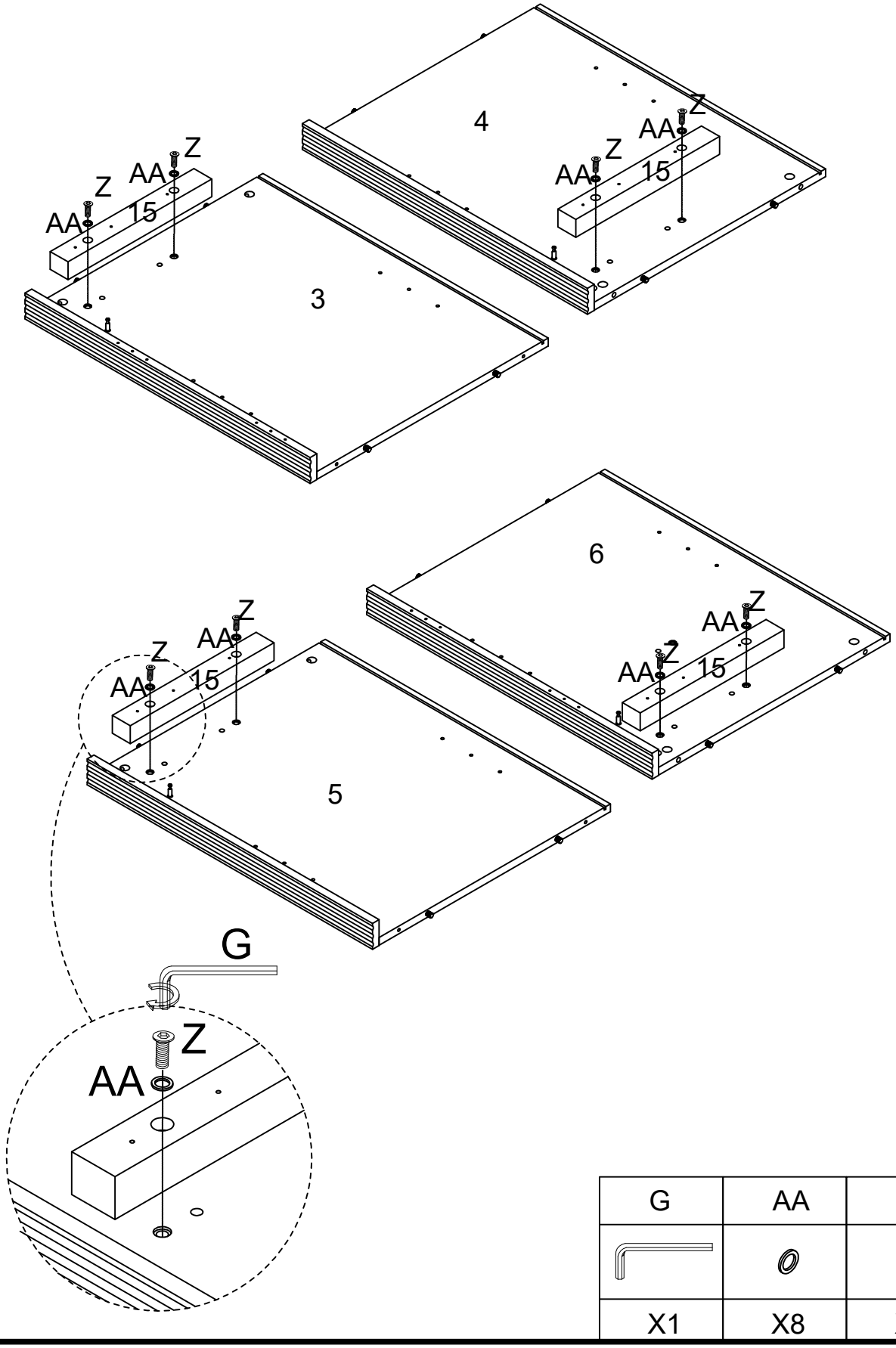

G	AA	Z
X1	X8	X8

Step 8

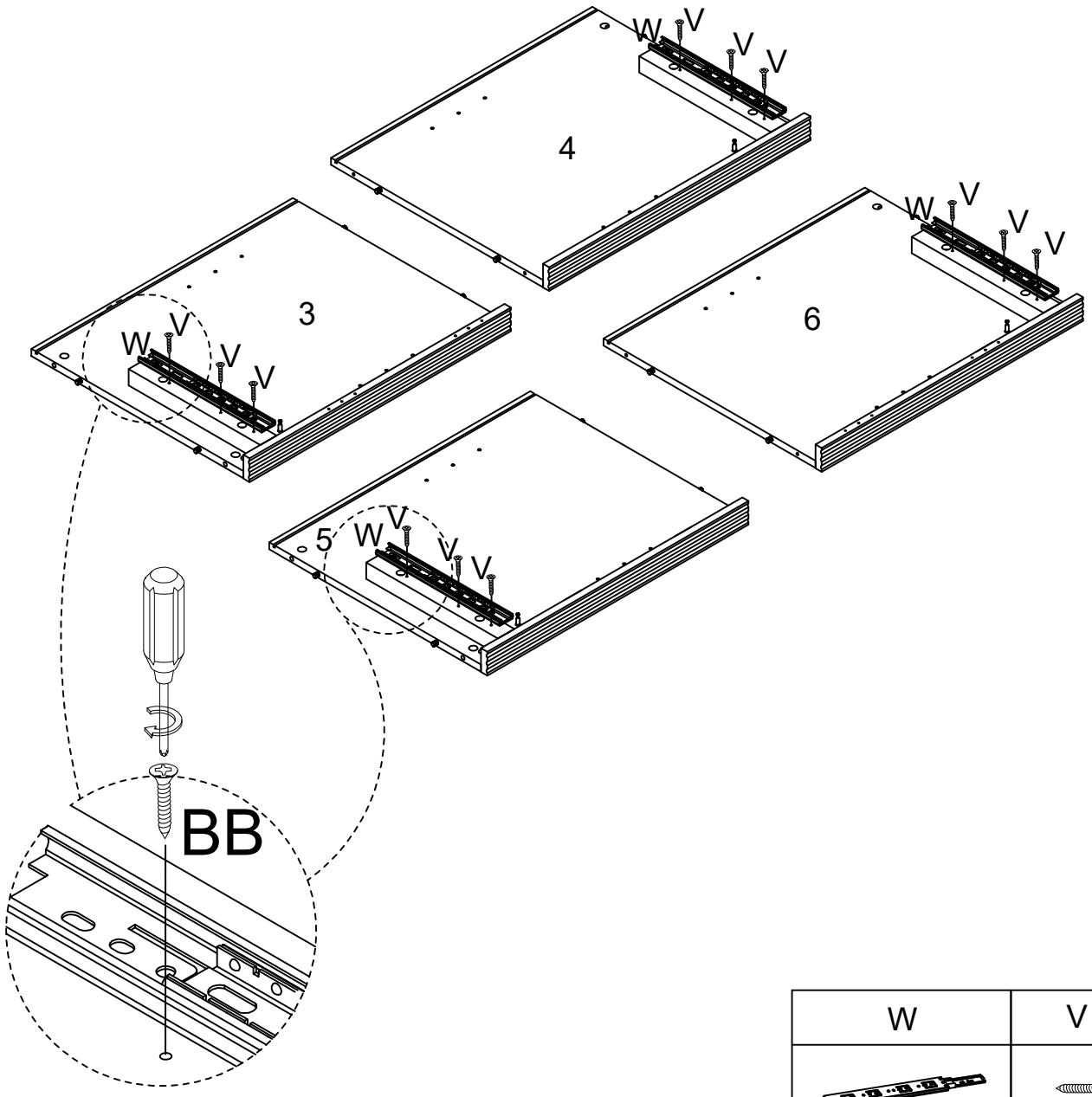

W	V
X2	X12

Step 9

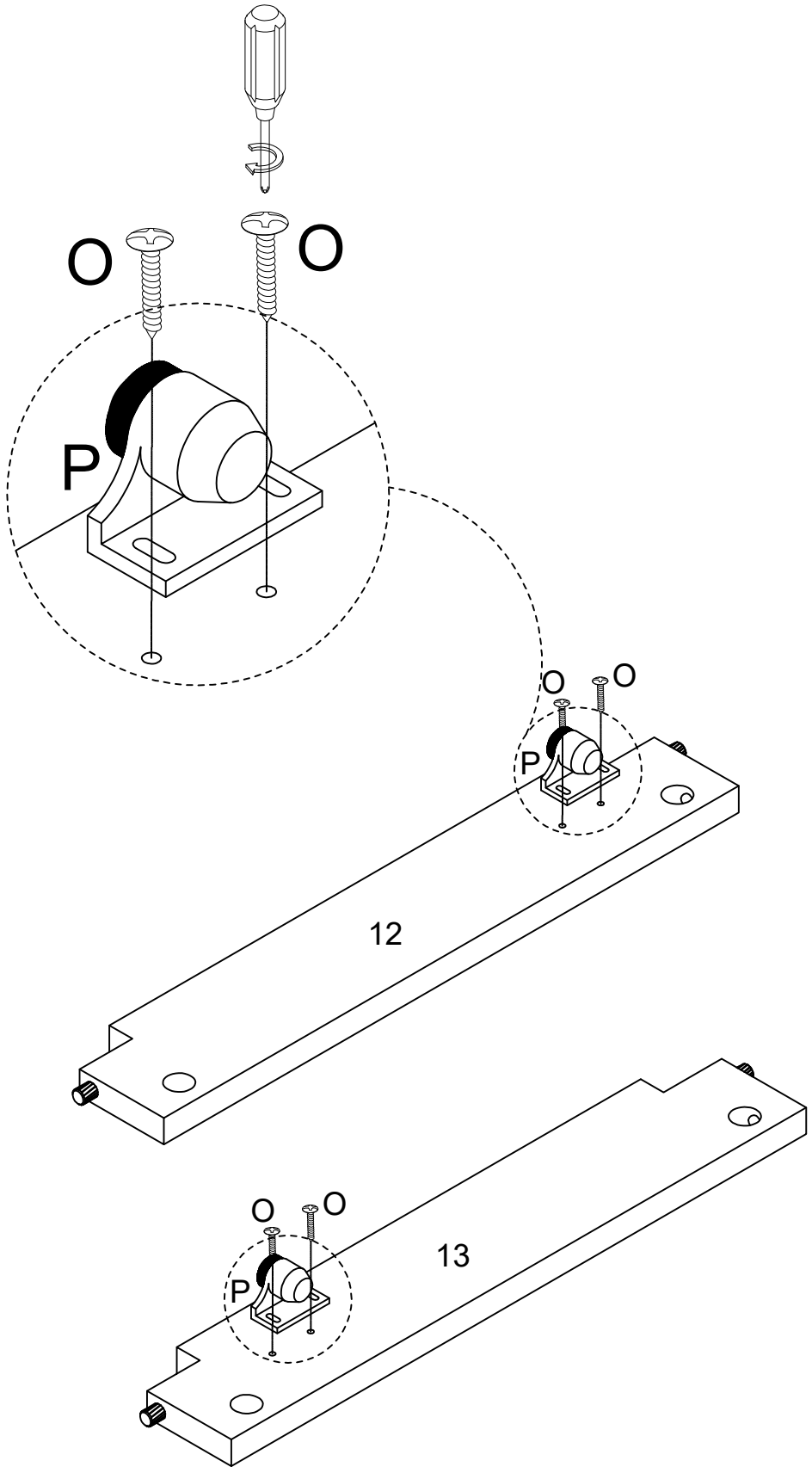

P	O
X2	X4

Step 10

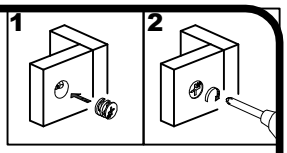

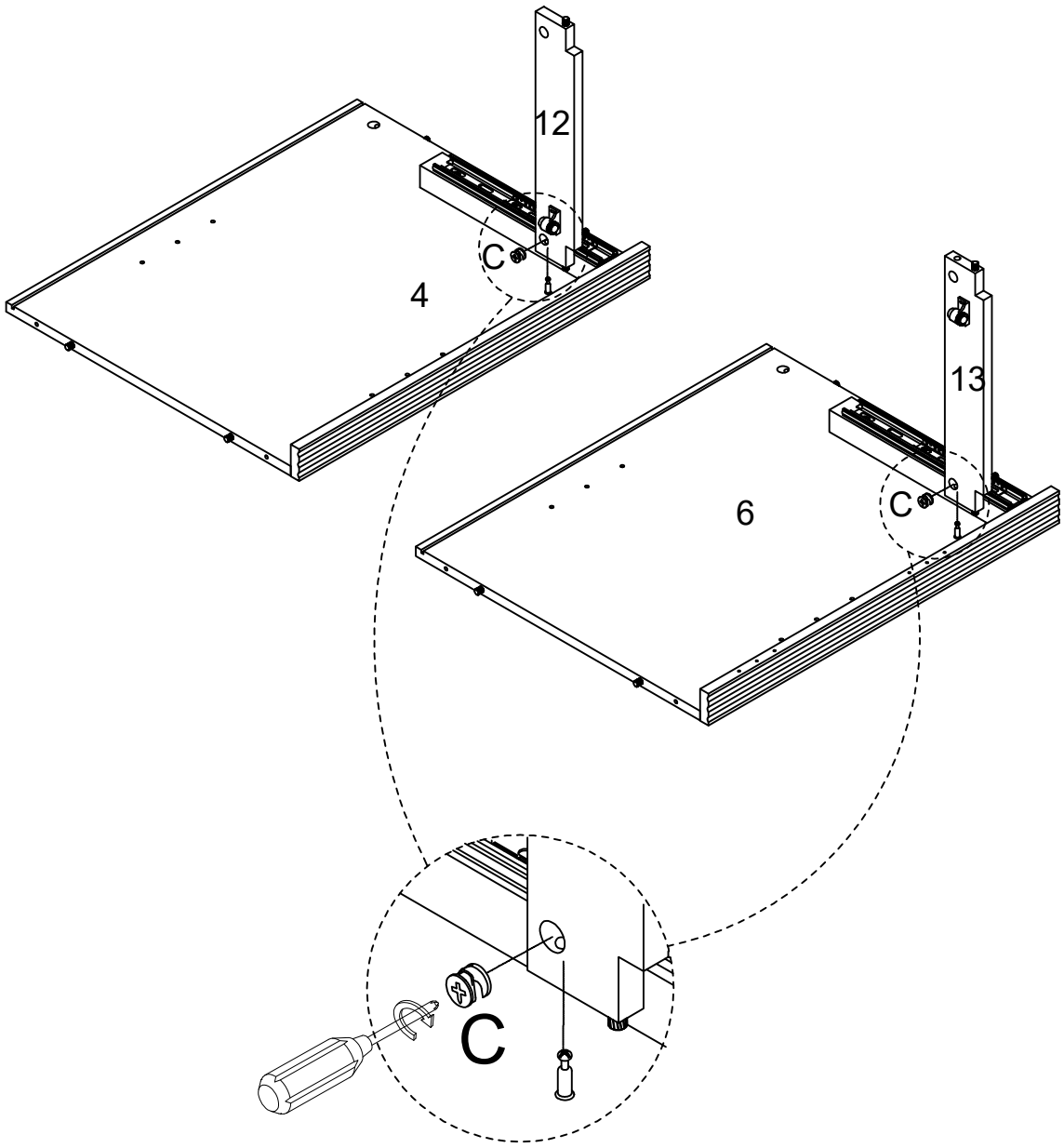

C
X2

Step 11

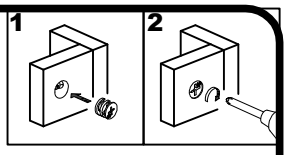

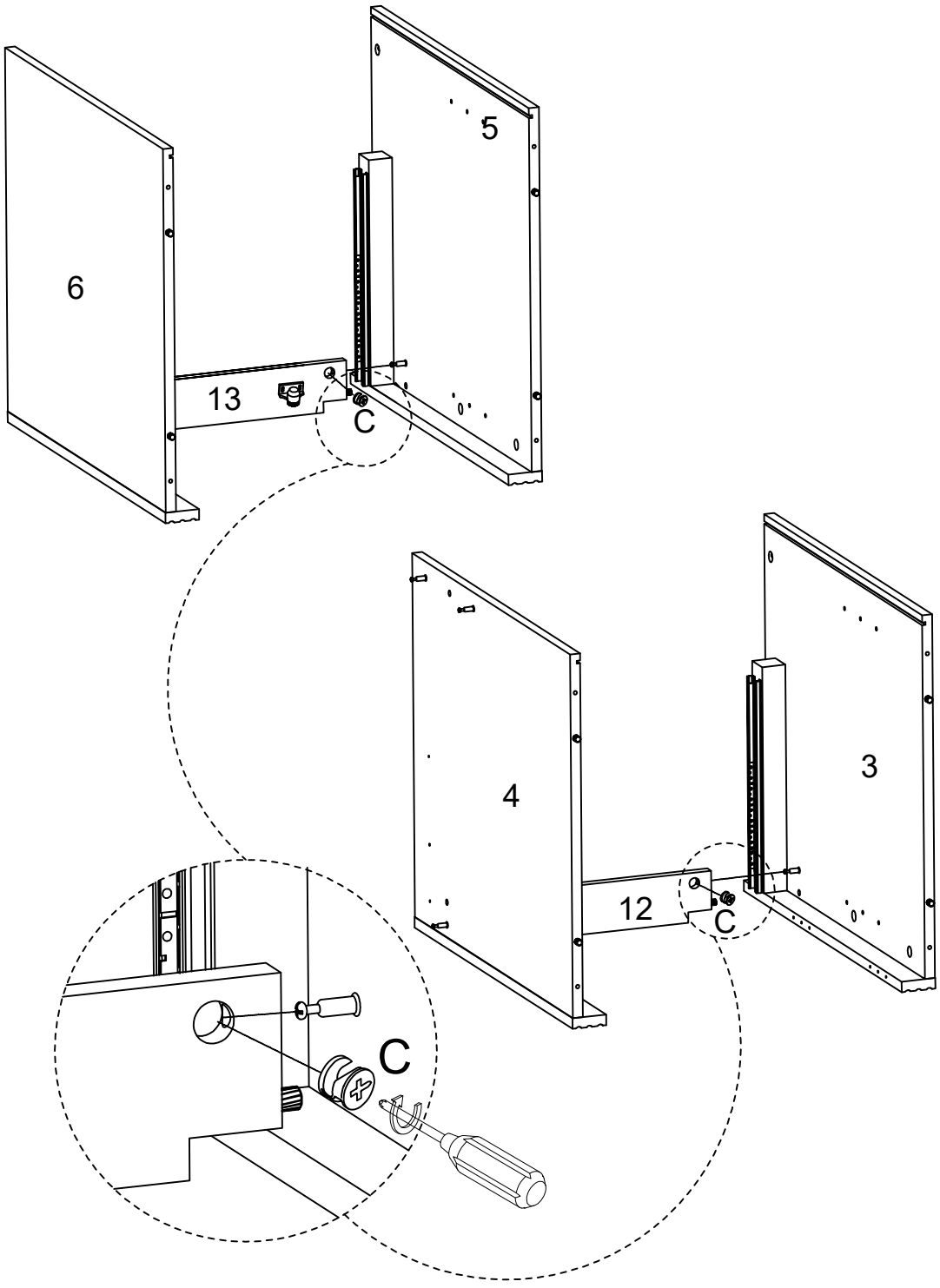

C
X2

Step 12

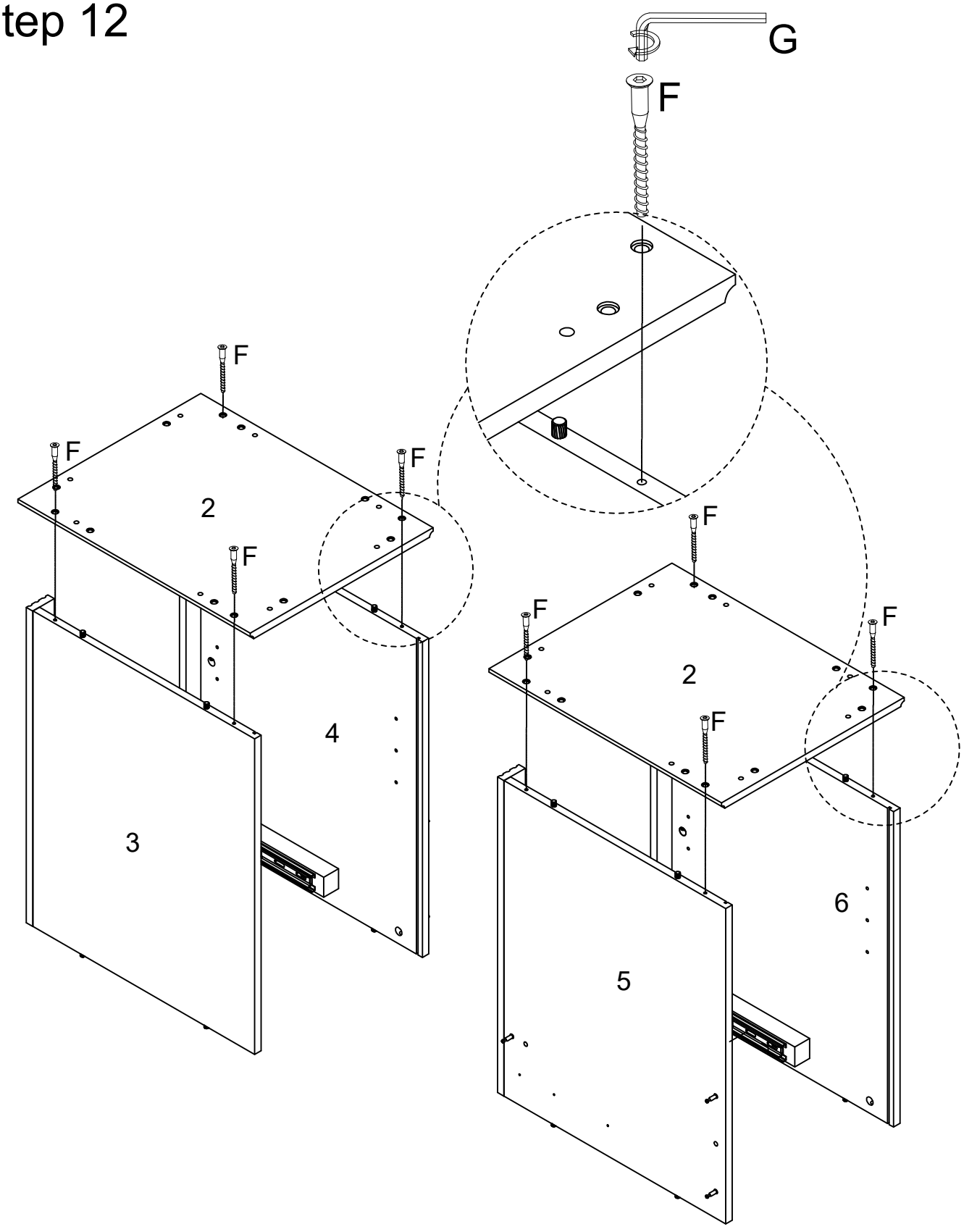

G	F
X1	X8

Step 13

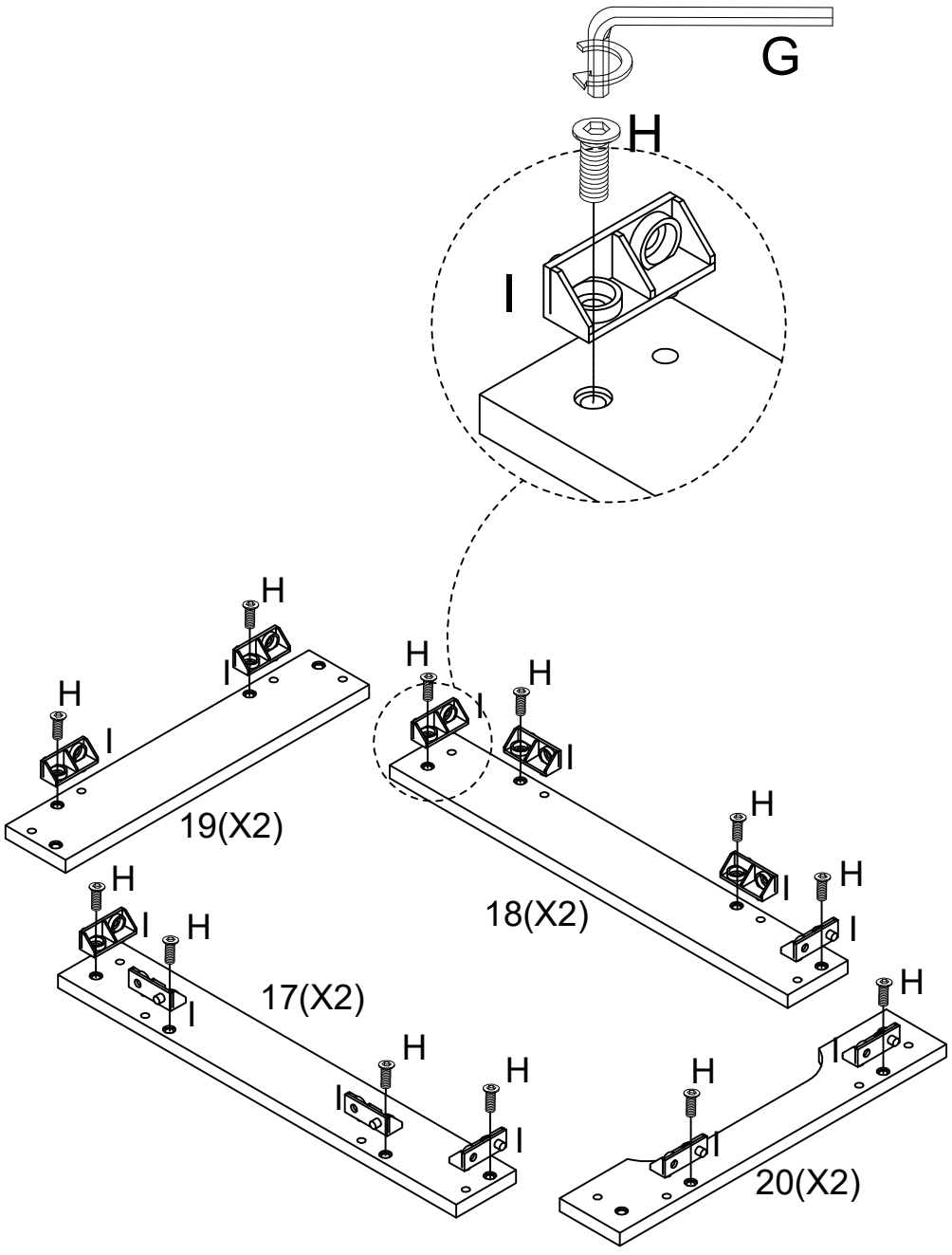

G	I	H
X1	X24	X24

Step 14

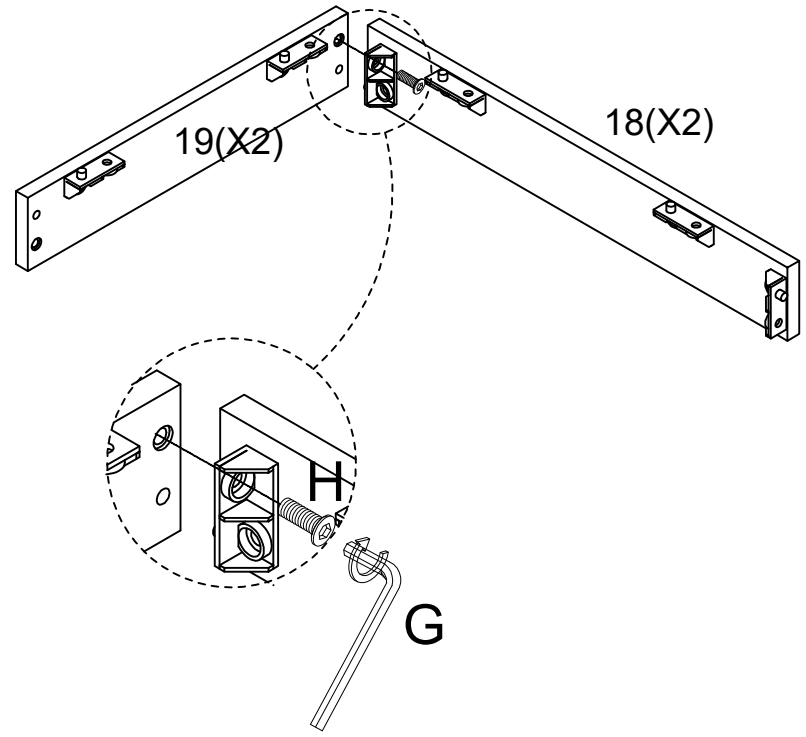

G	H
X1	X2

Step 15

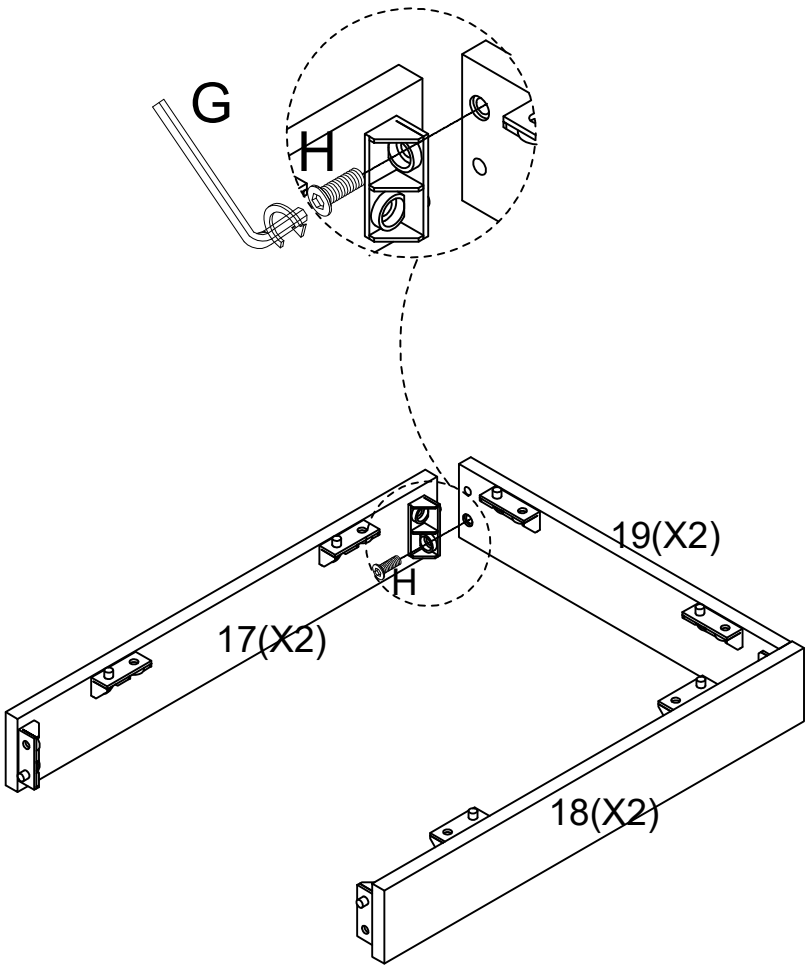

G	H
X1	X2

Step 16

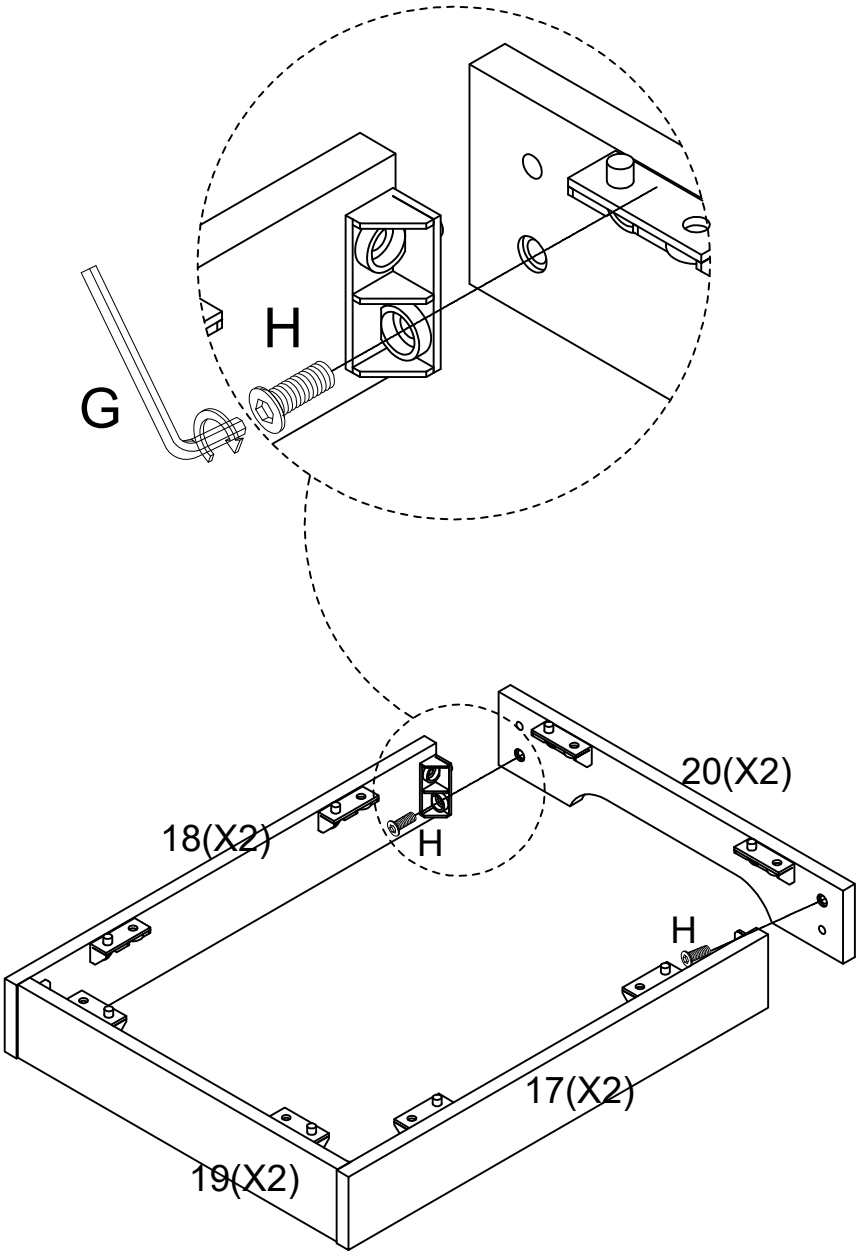

G	H
X1	X4

Step 17

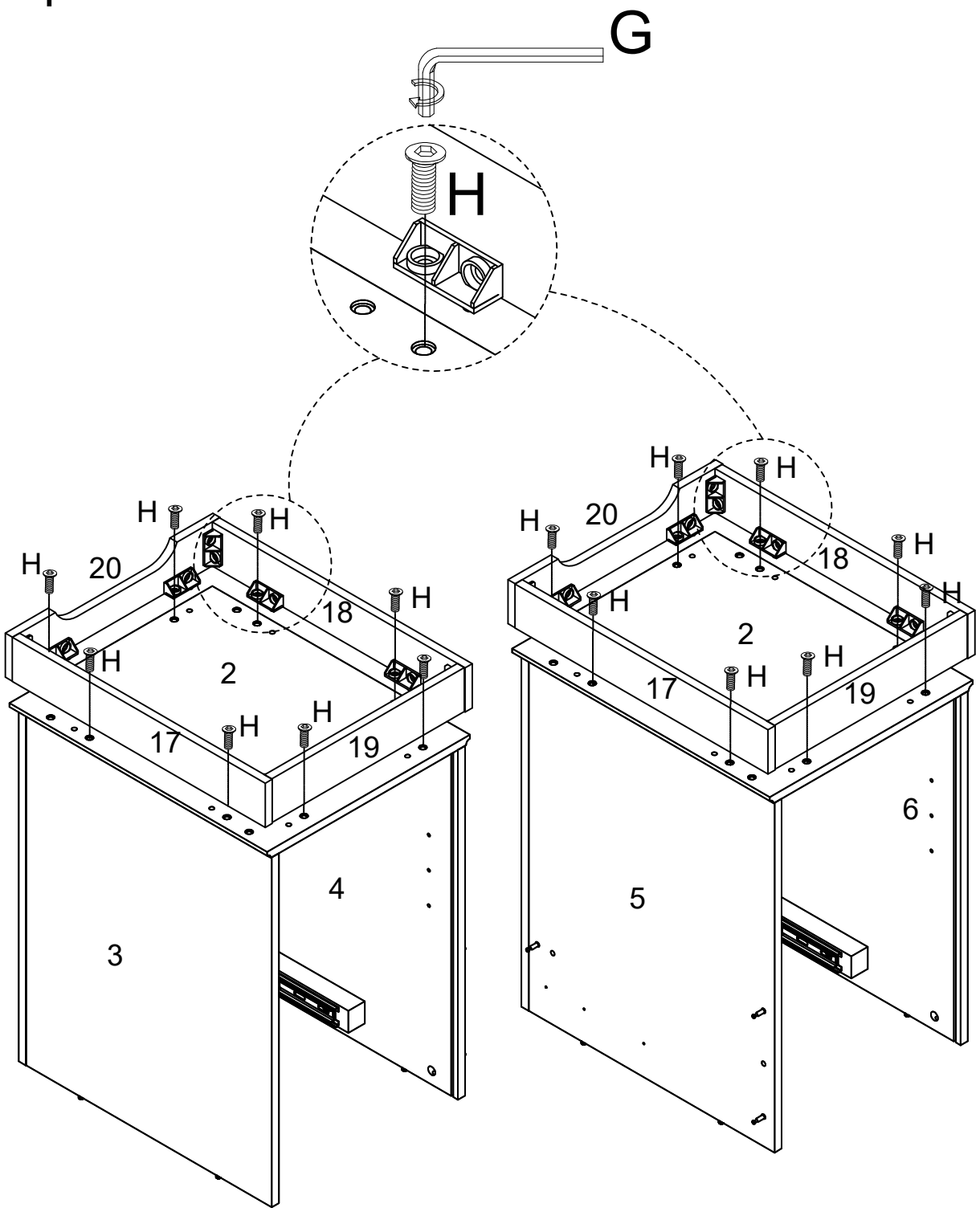

G	H
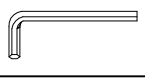	
X1	X16

Step 18

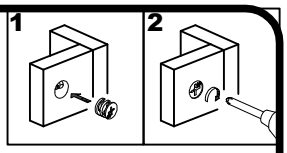

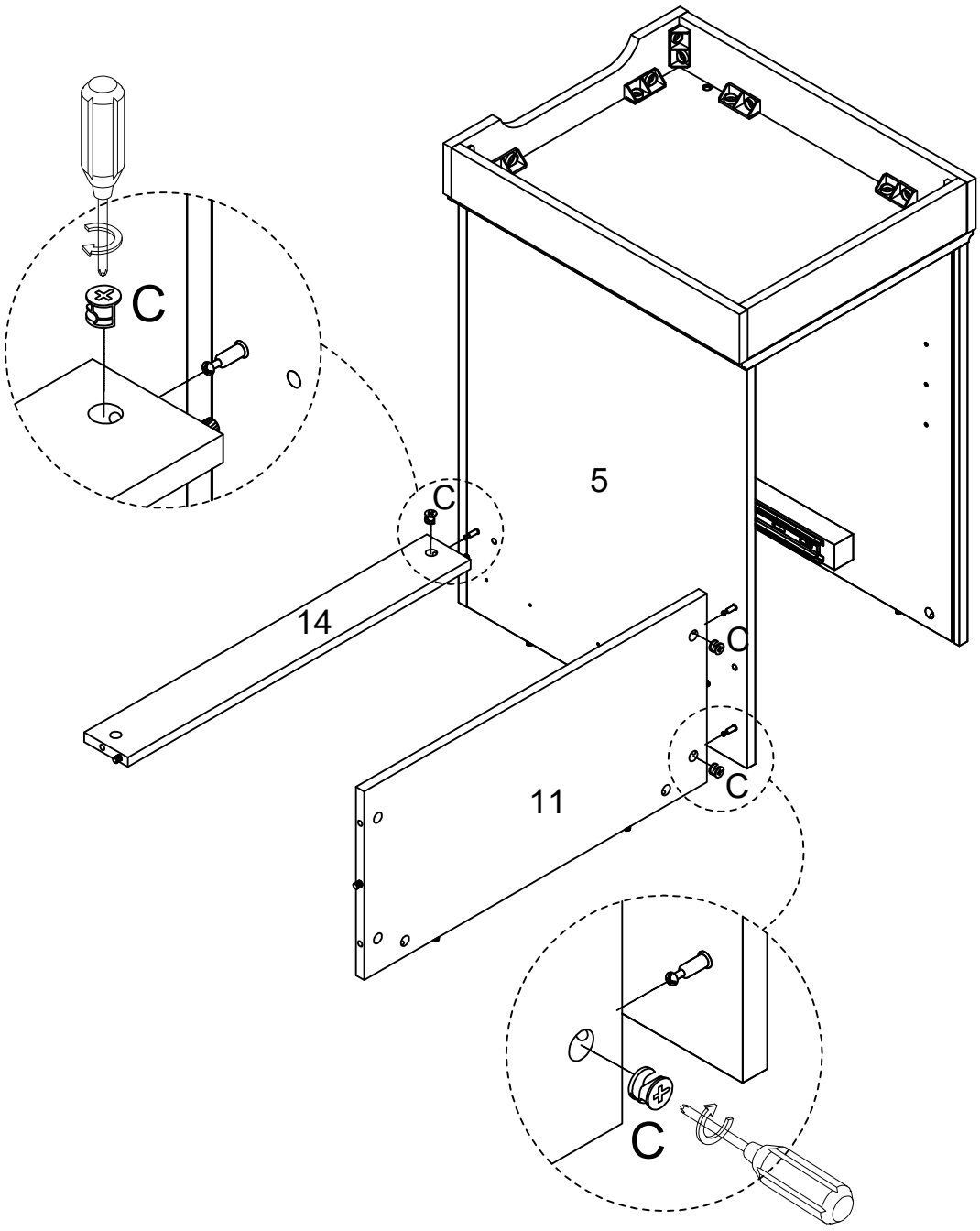

C
X3

Step 19

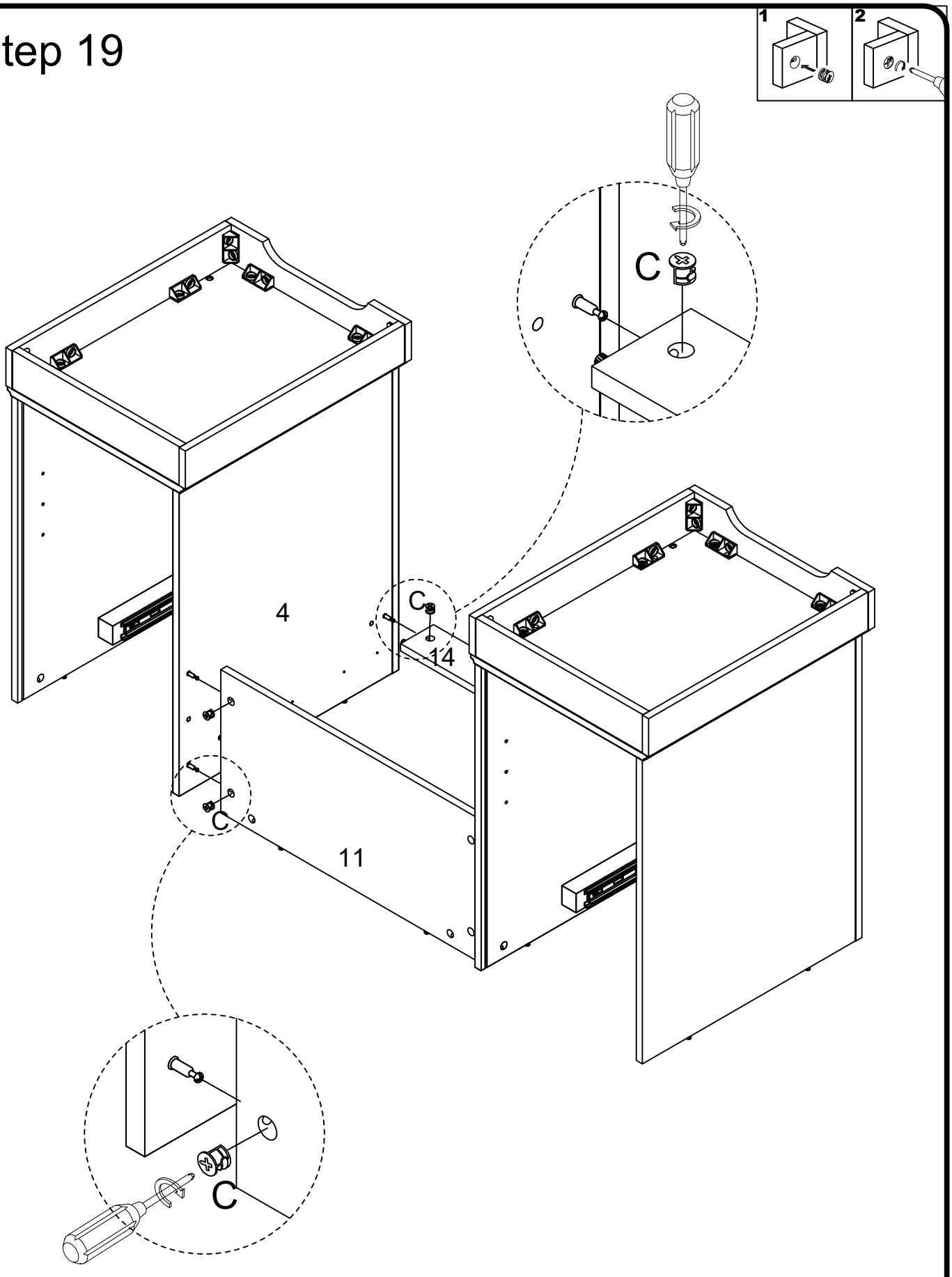

C
X3

Step 20

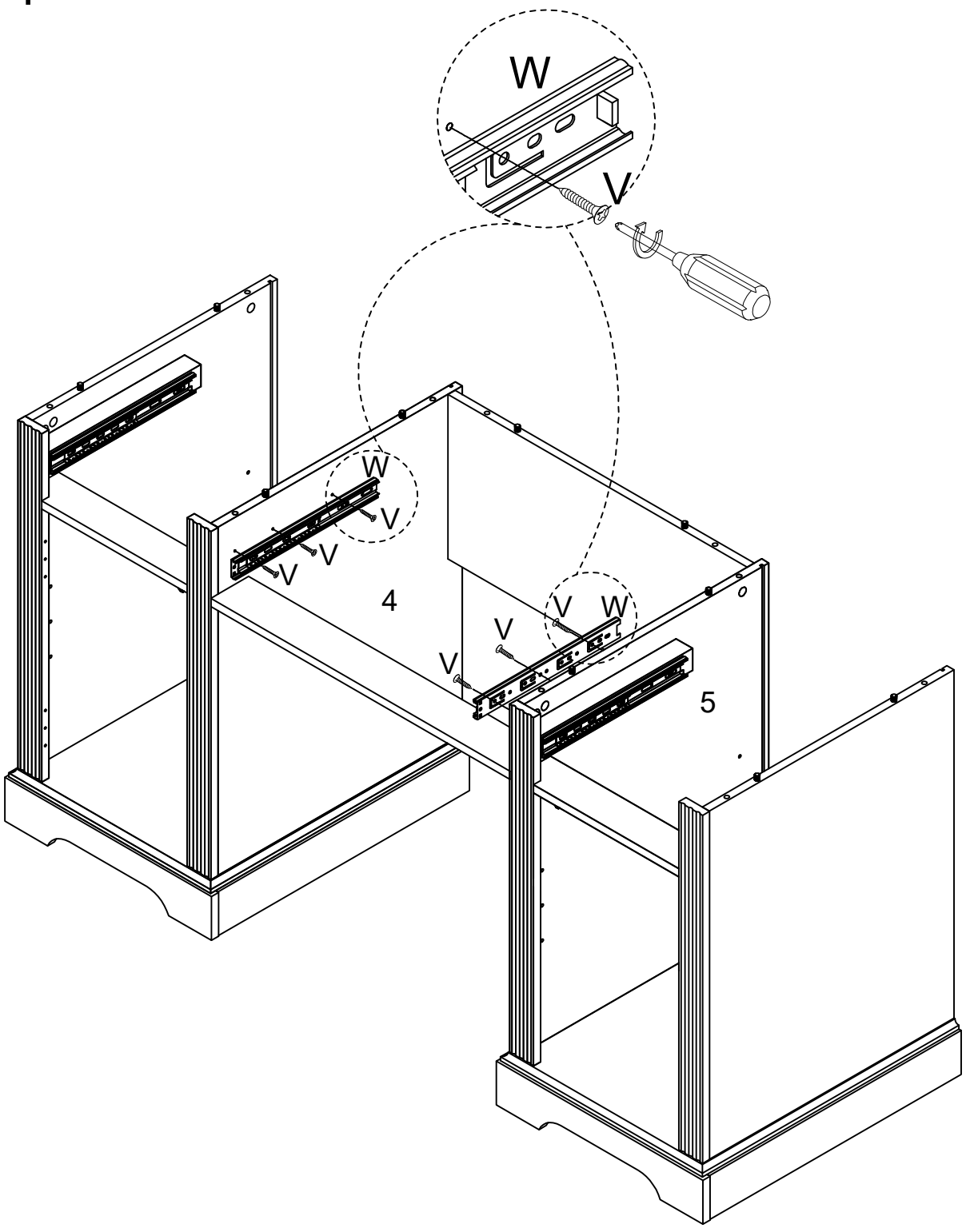

W	V
X1	X6

Step 21

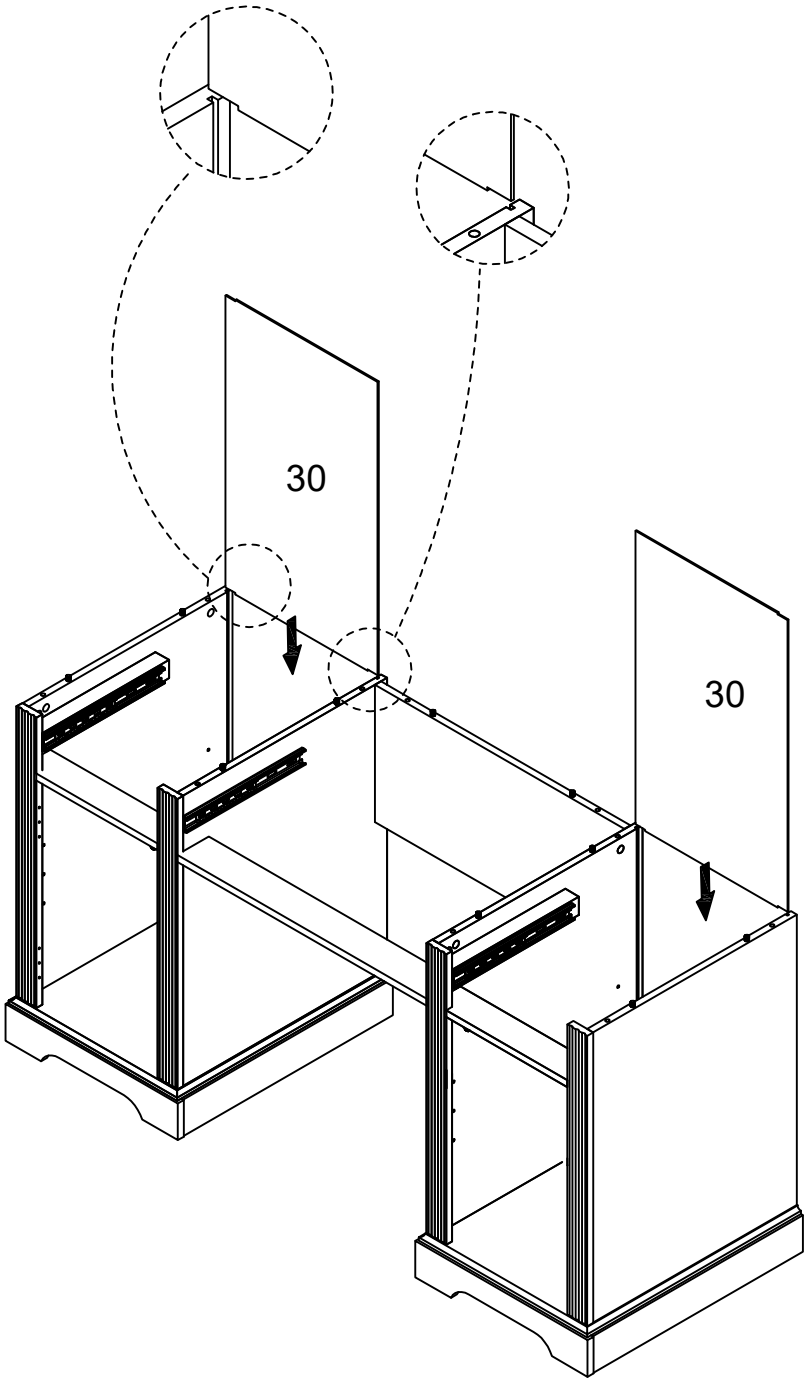

Step 22

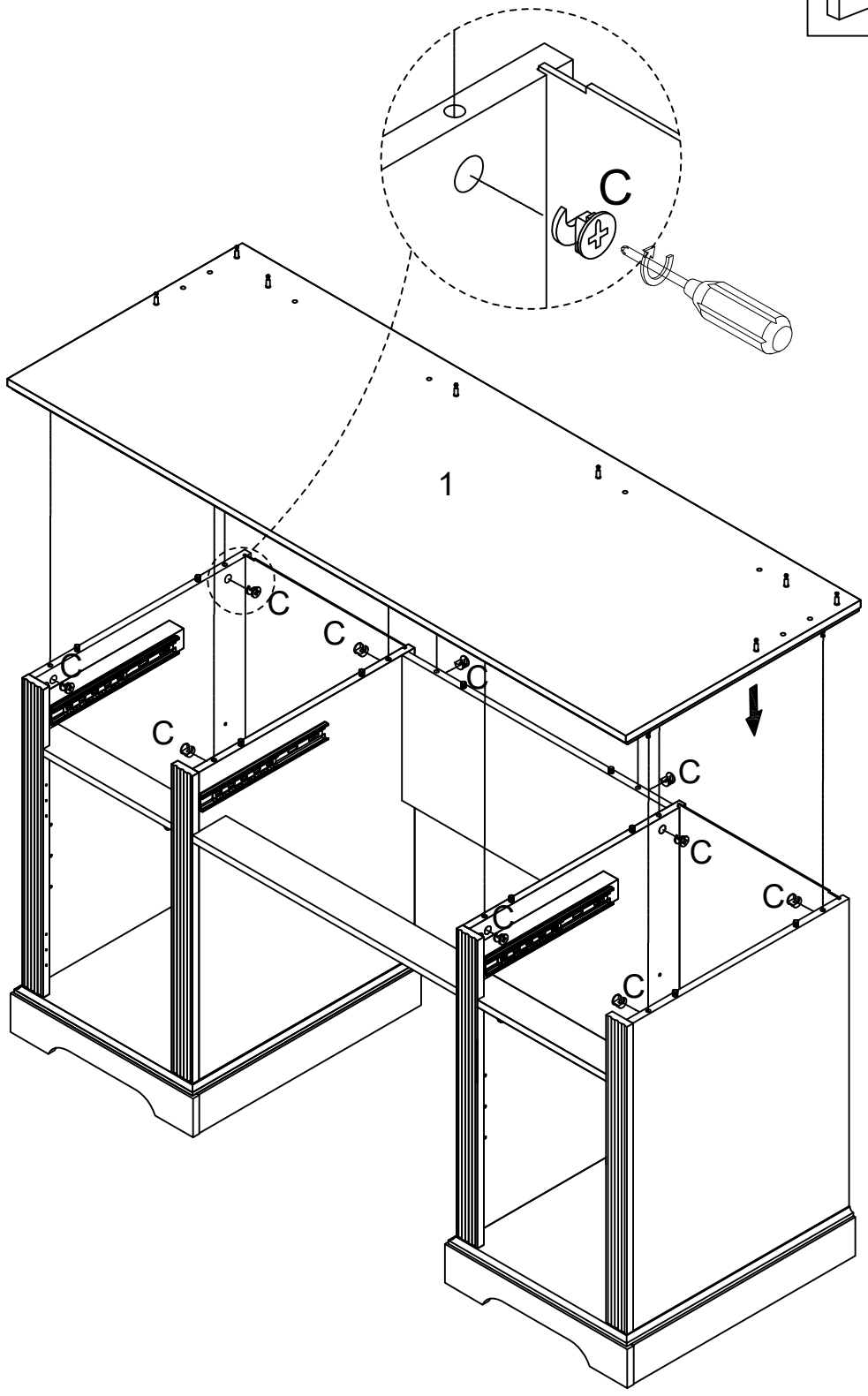

C
X10

Step 23

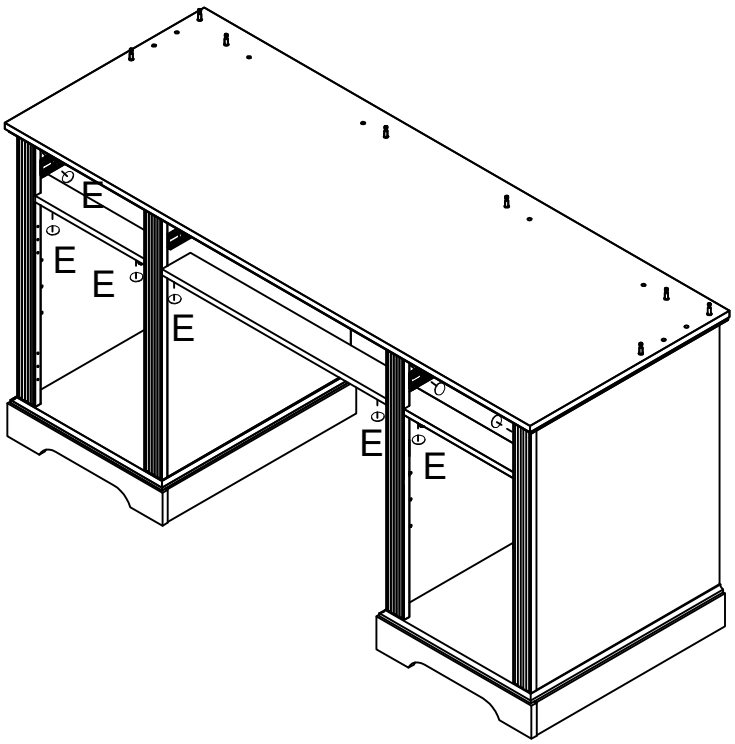

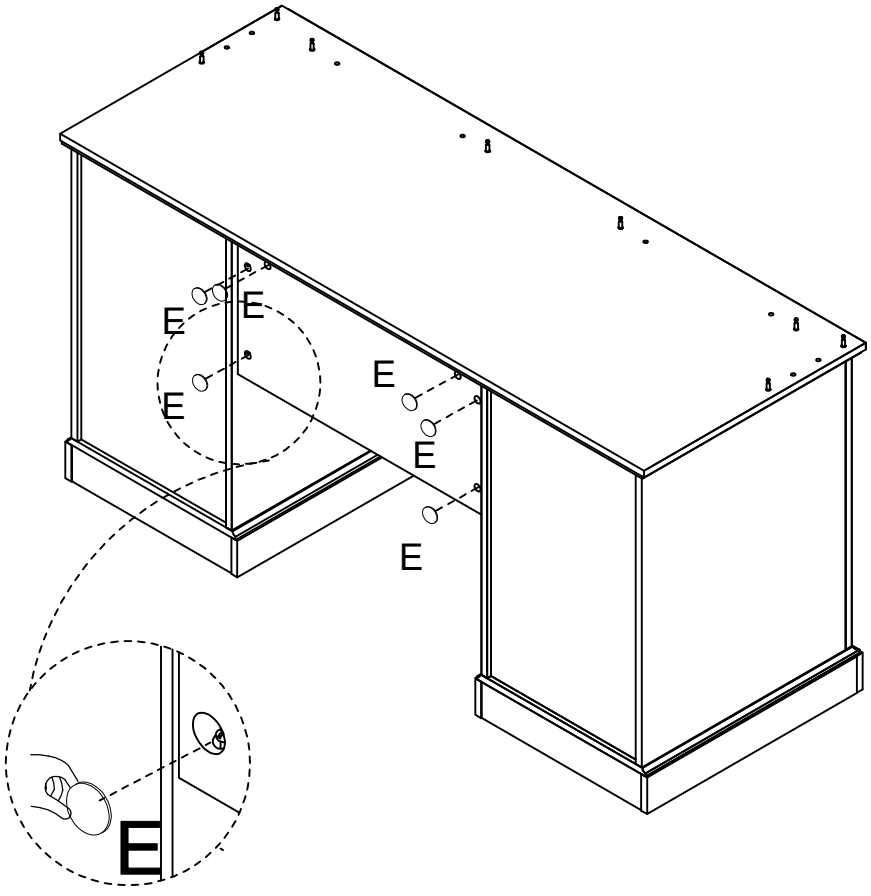

E
⬭
X32

Step 24

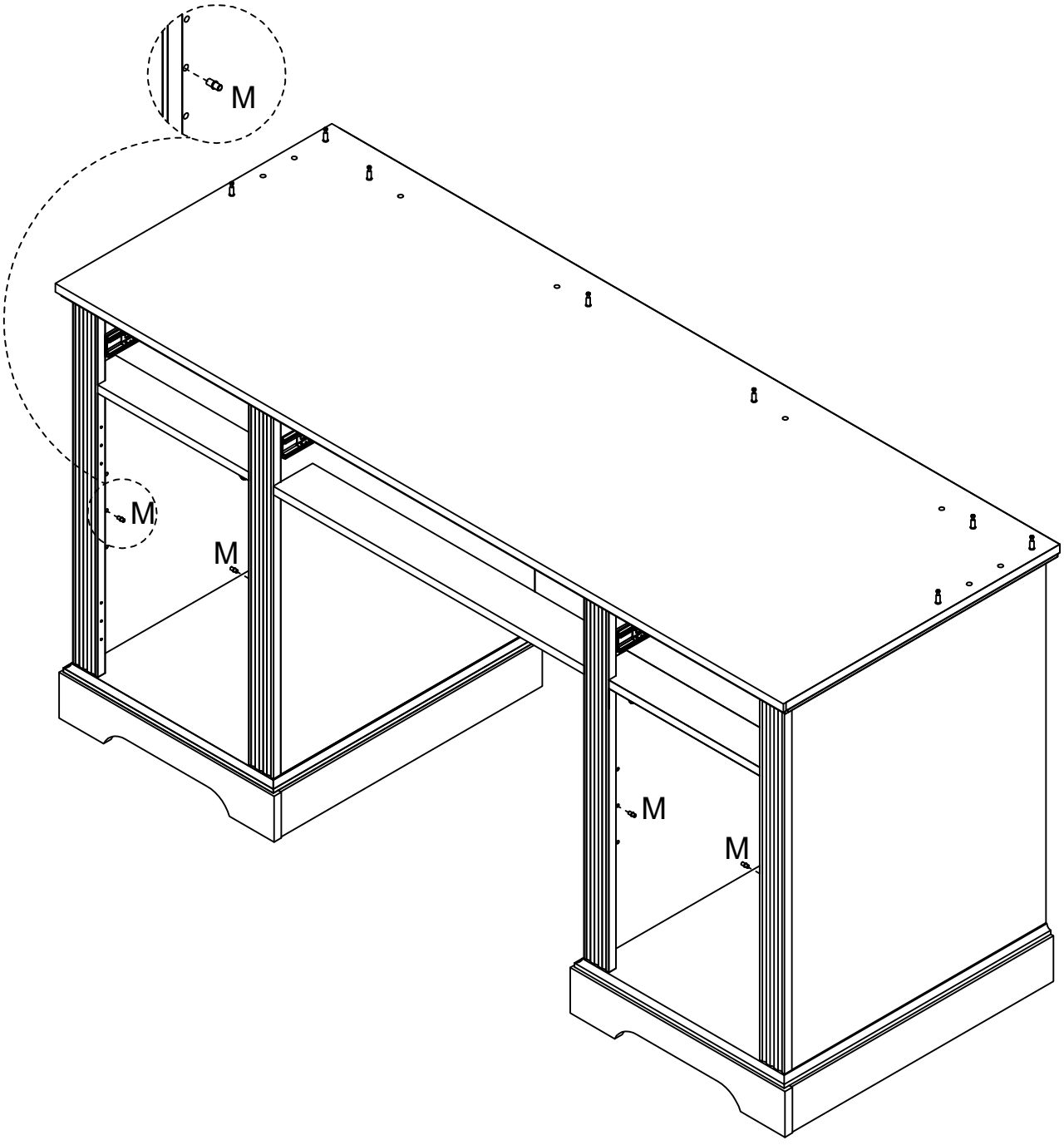

M
X8

Step 25

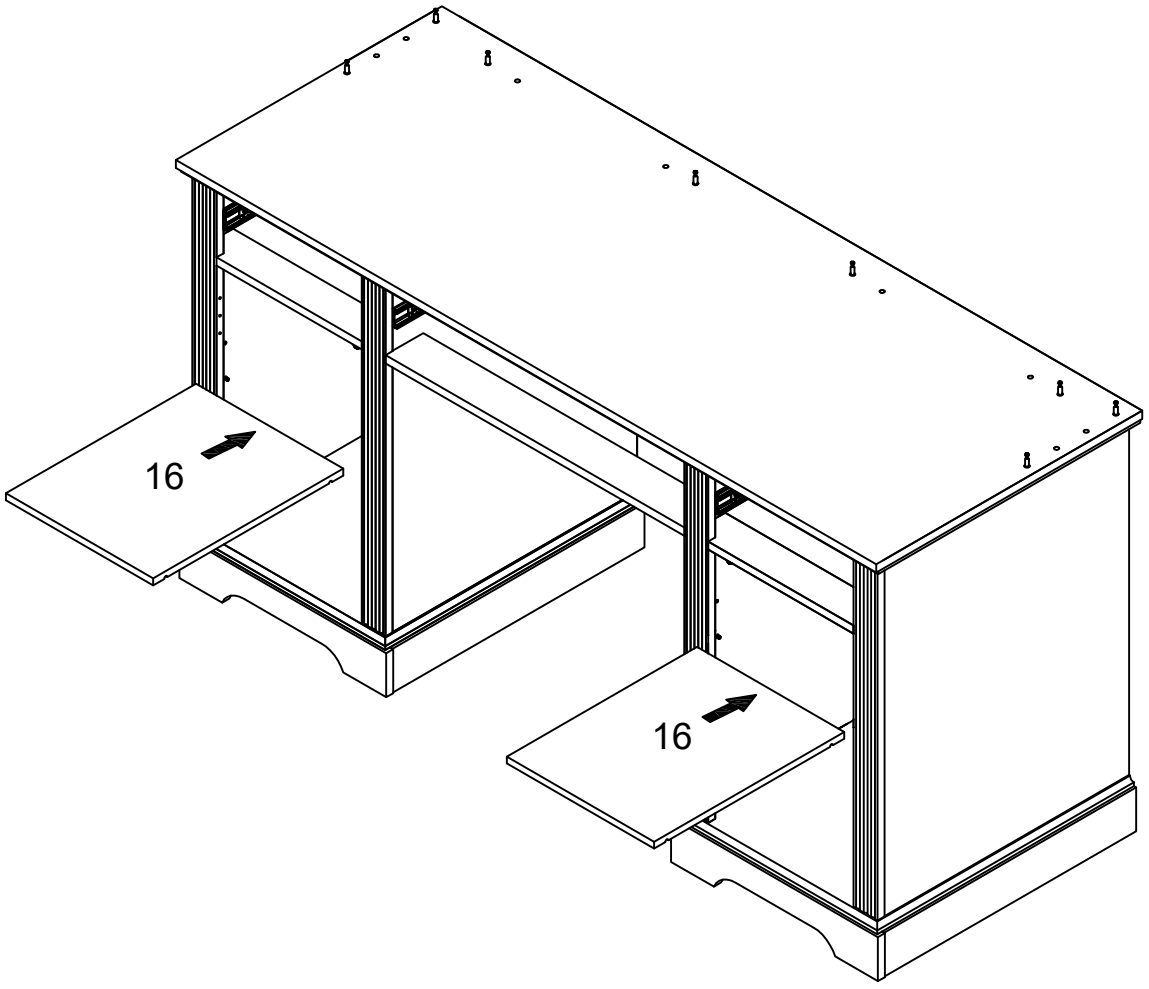

Step 26

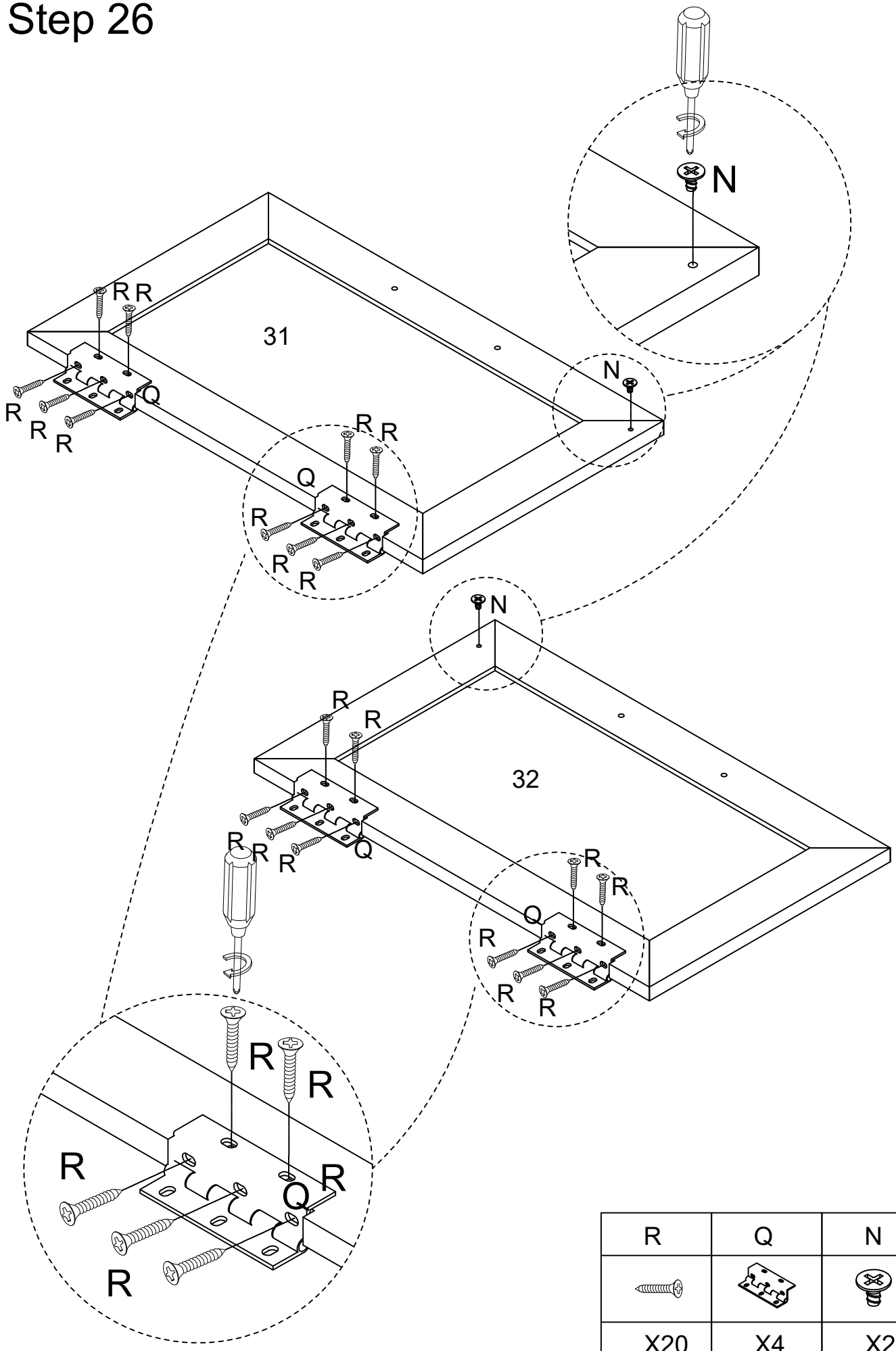

R	Q	N
X20	X4	X2

Step 27

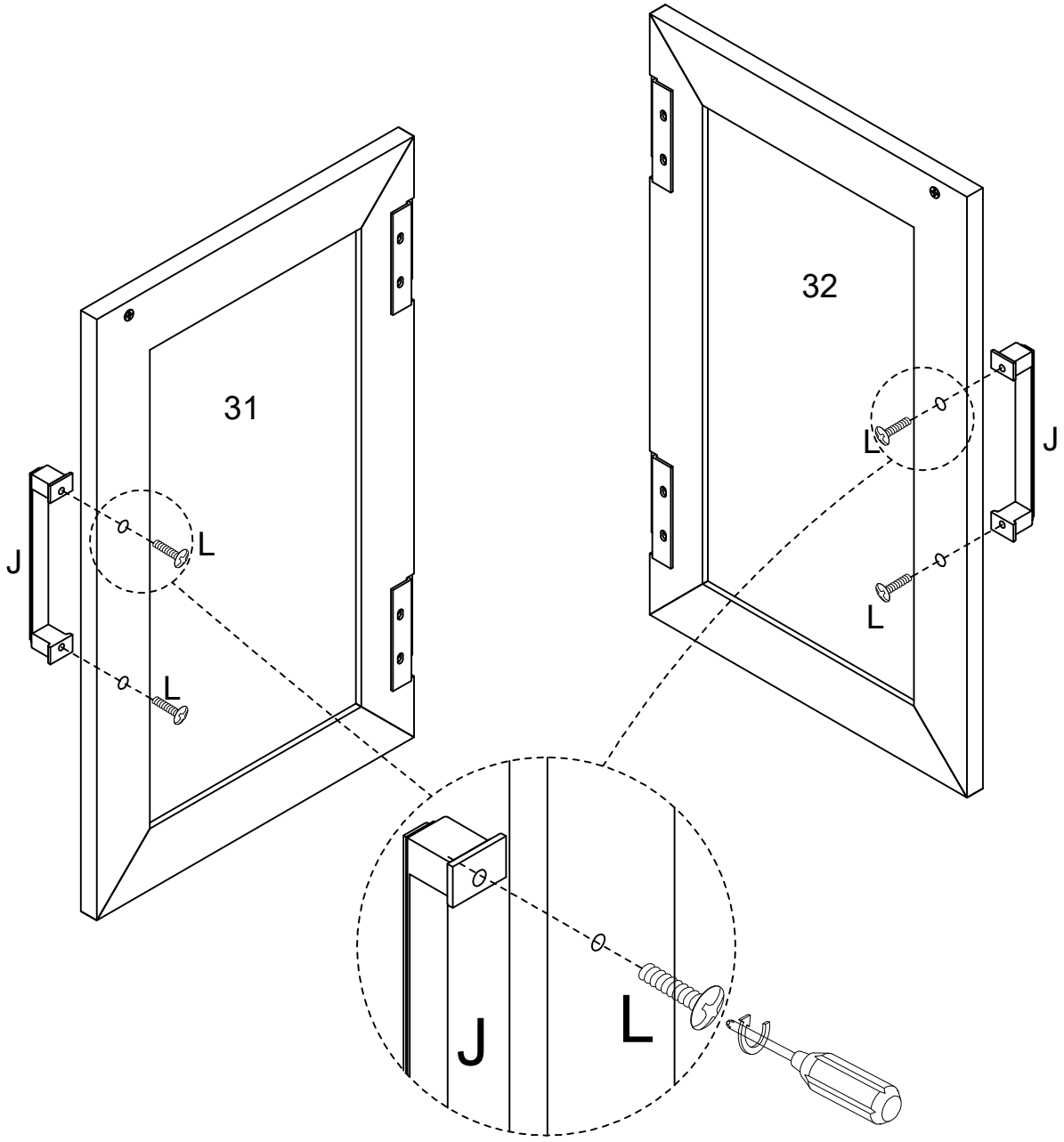

L	J
X4	X2

Step 28

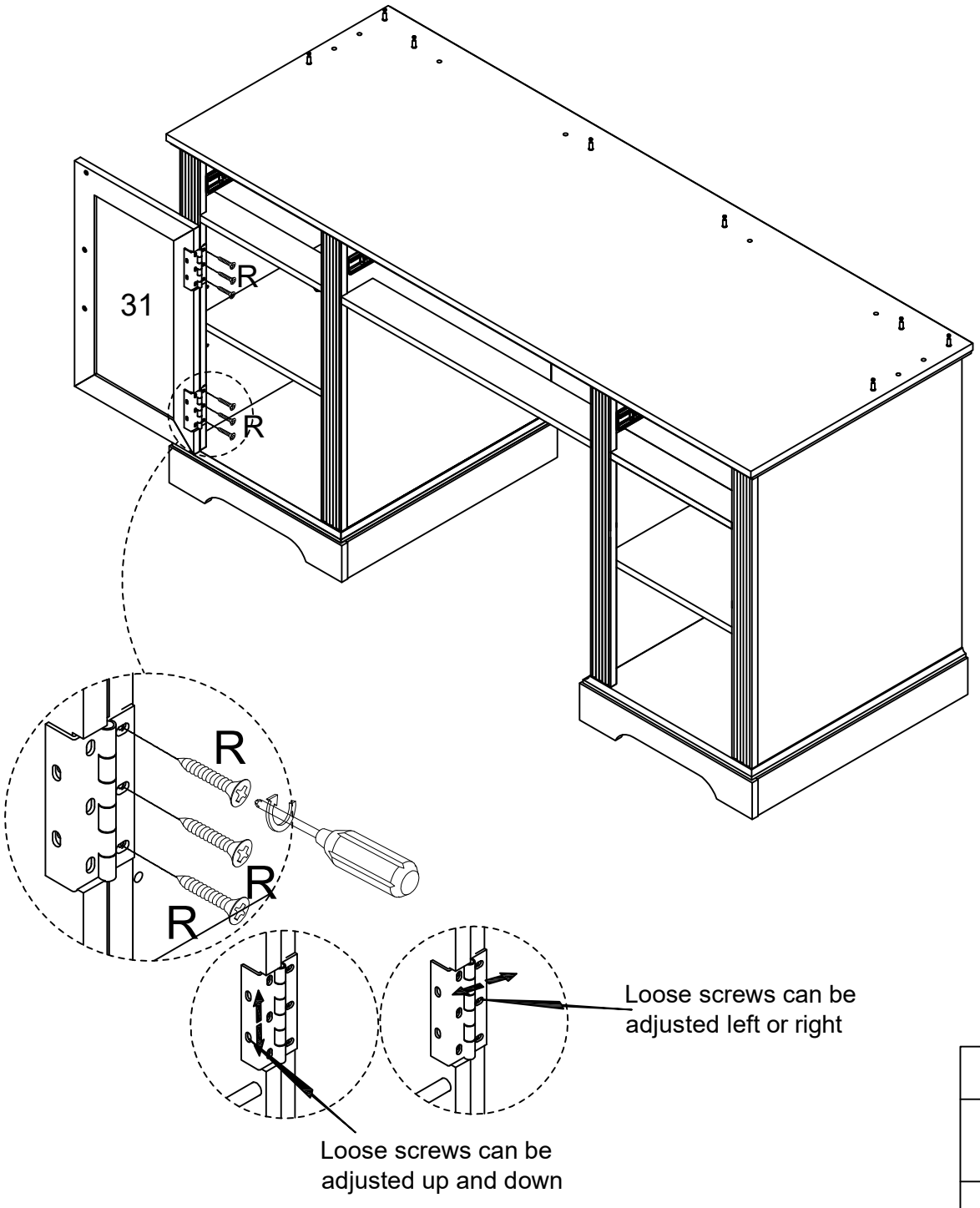
31
R
R
R
R
R
Loose screws can be
adjusted left or right
Loose screws can be
adjusted up and down

R
X6

Step 29

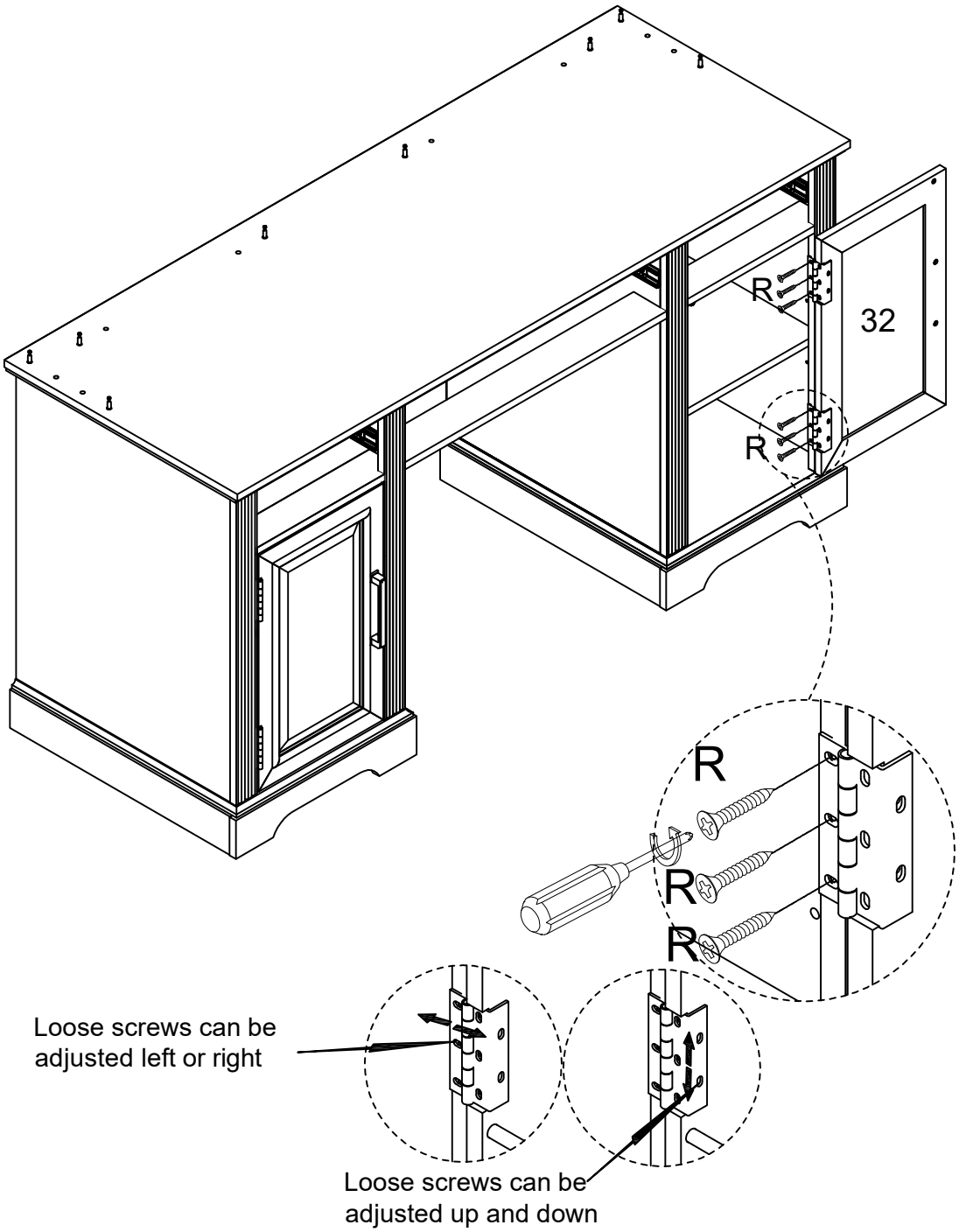
R
32
R
R
R
R
Loose screws can be
adjusted left or right
Loose screws can be
adjusted up and down

R
X6

Step 30

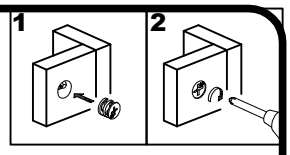

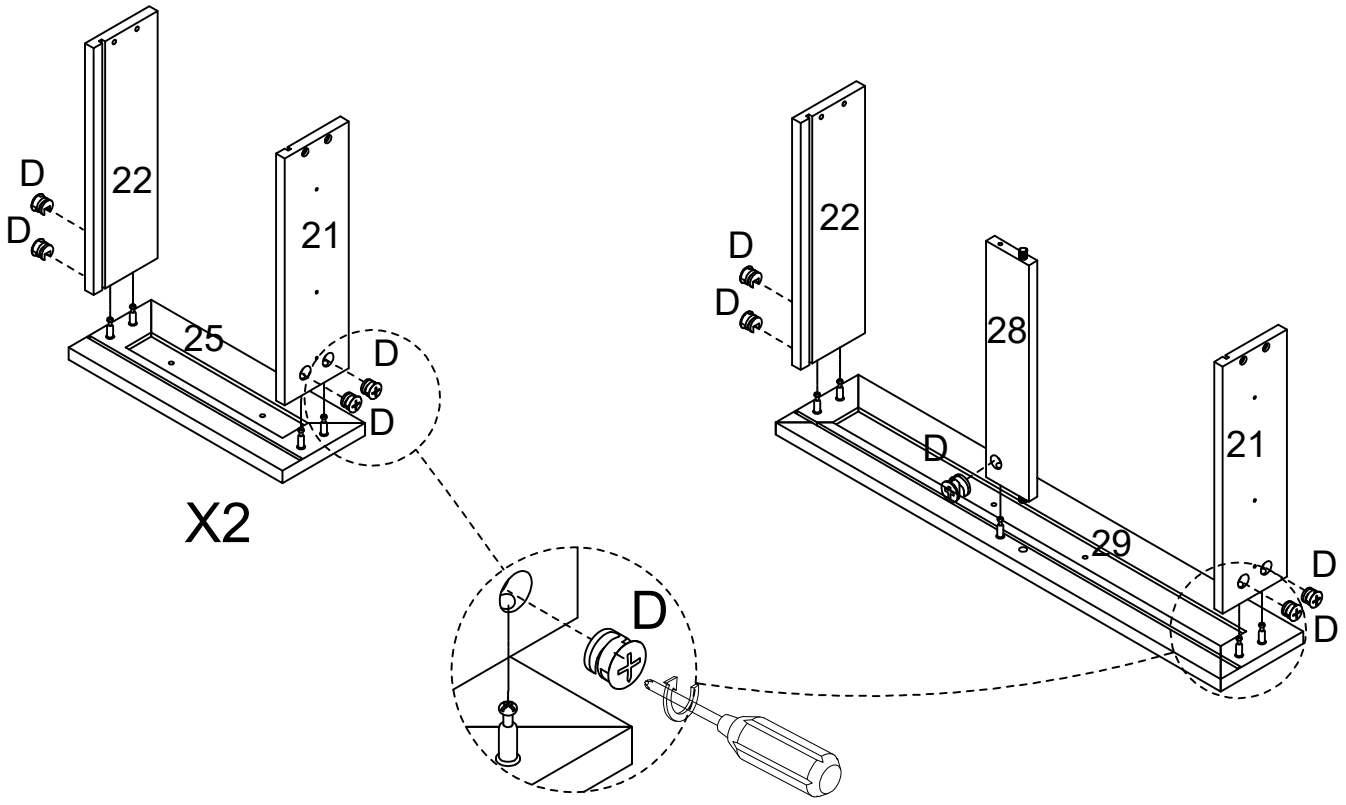

D
X13

Step 31

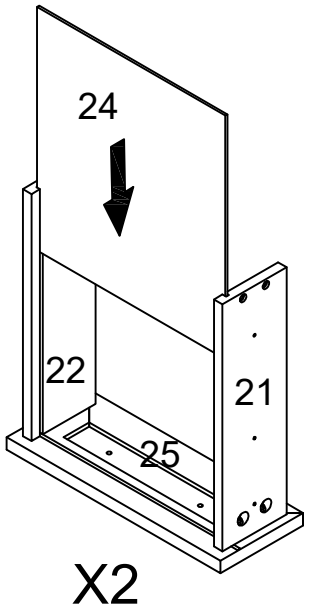

X2

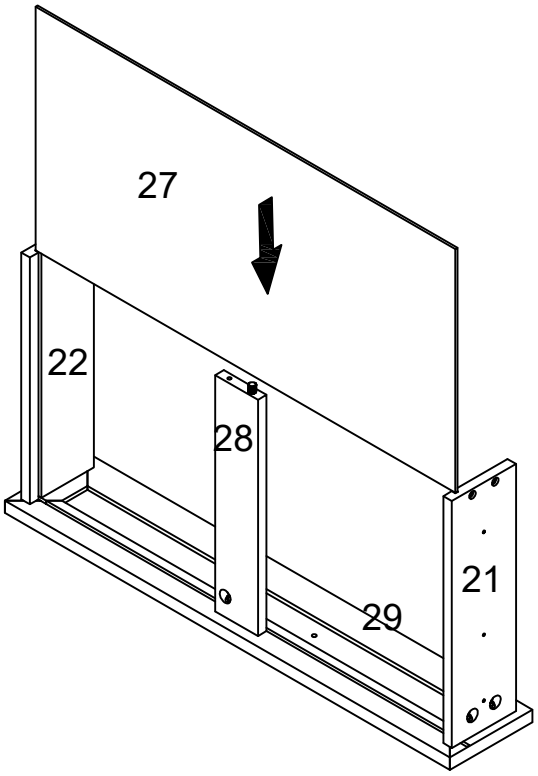

Step 32

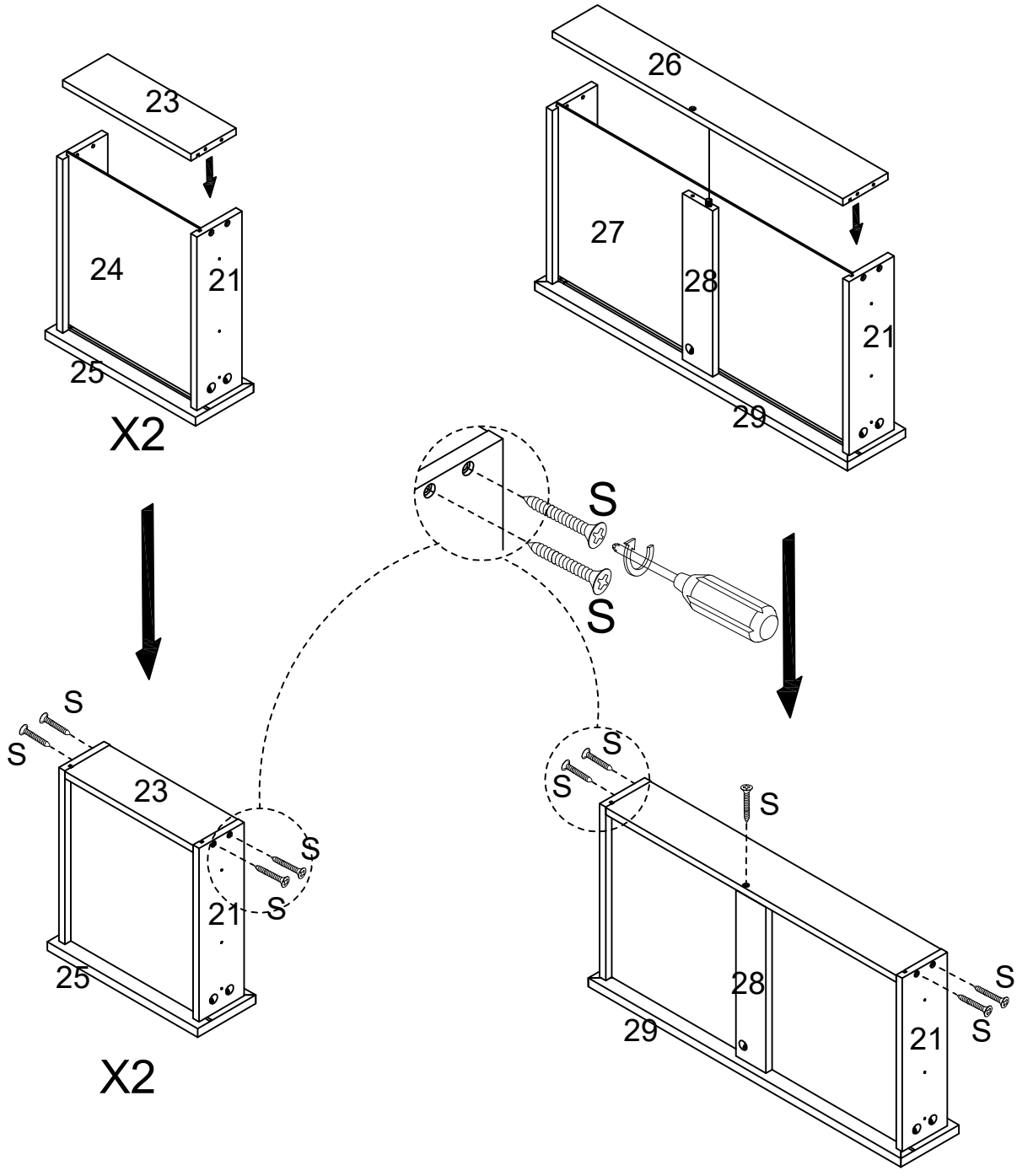

S
X13

Step 33

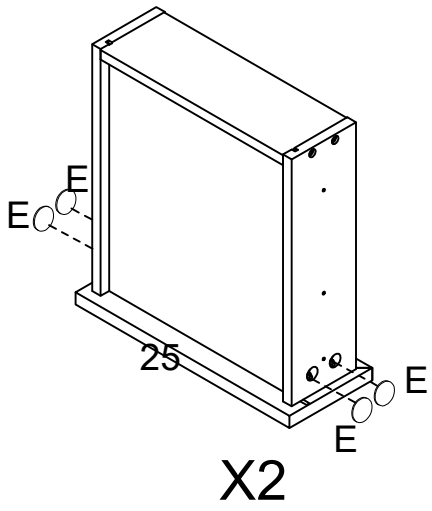

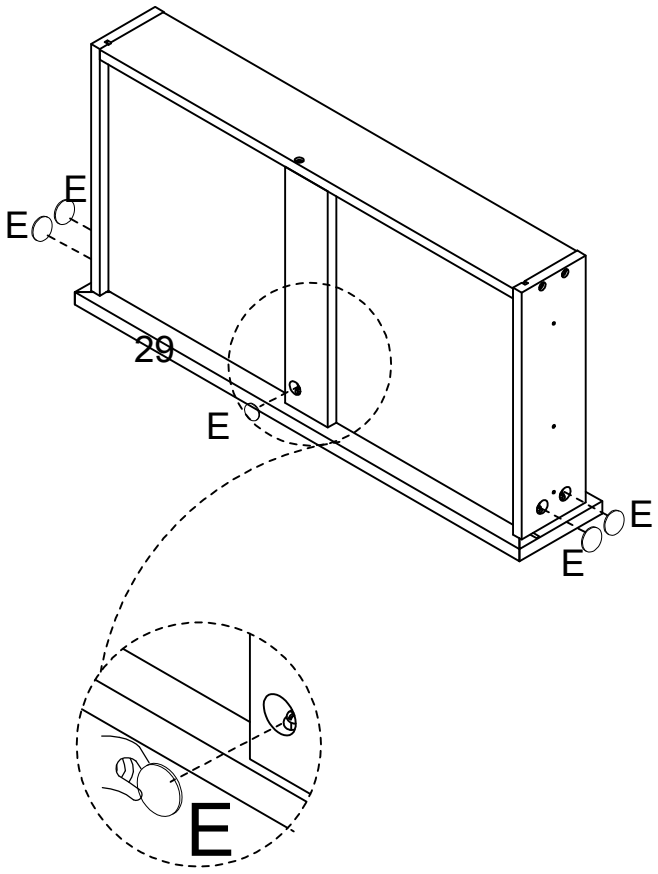

E
⬭
X13

Step 34

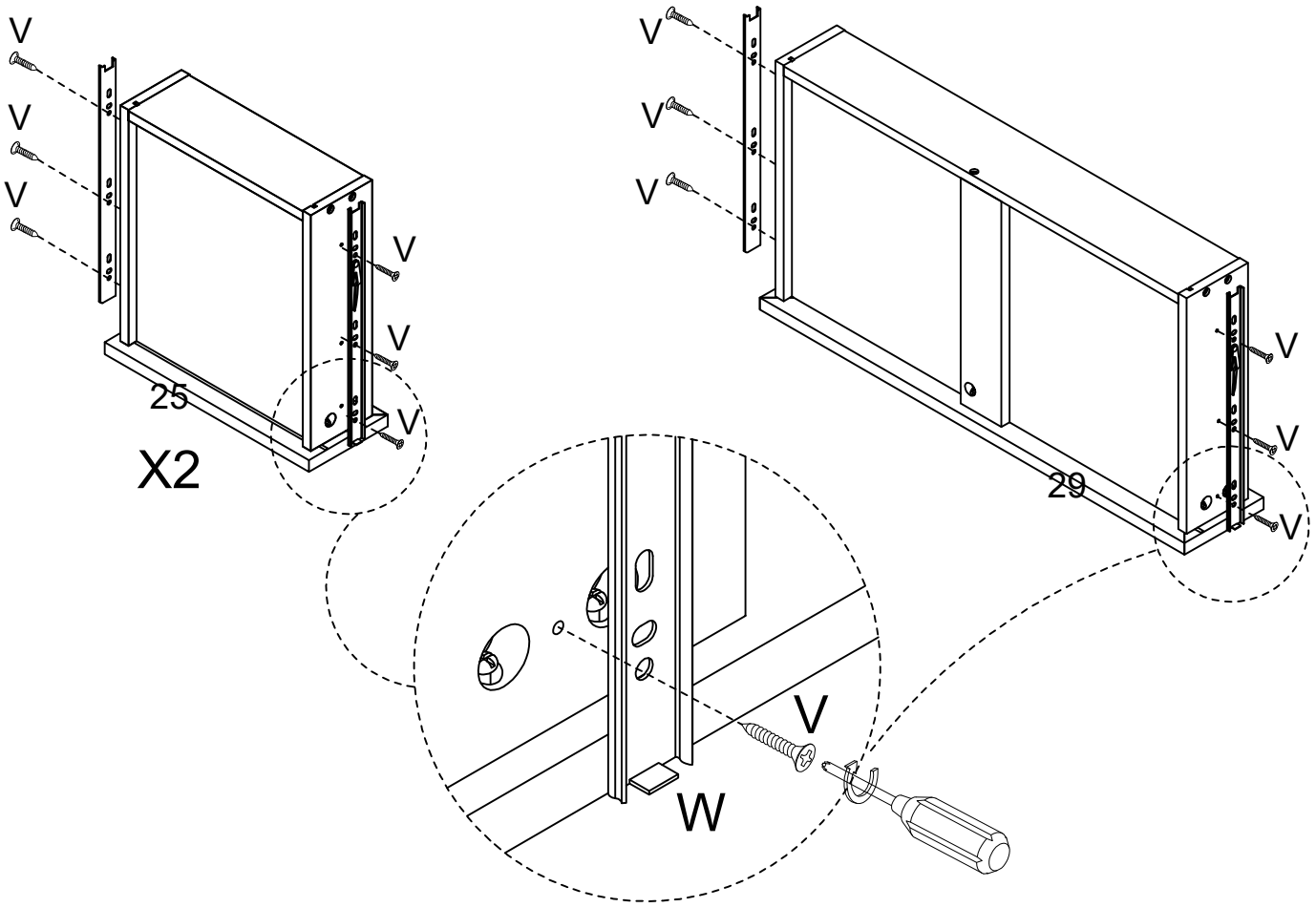

W	V
X3	X18

Step 35

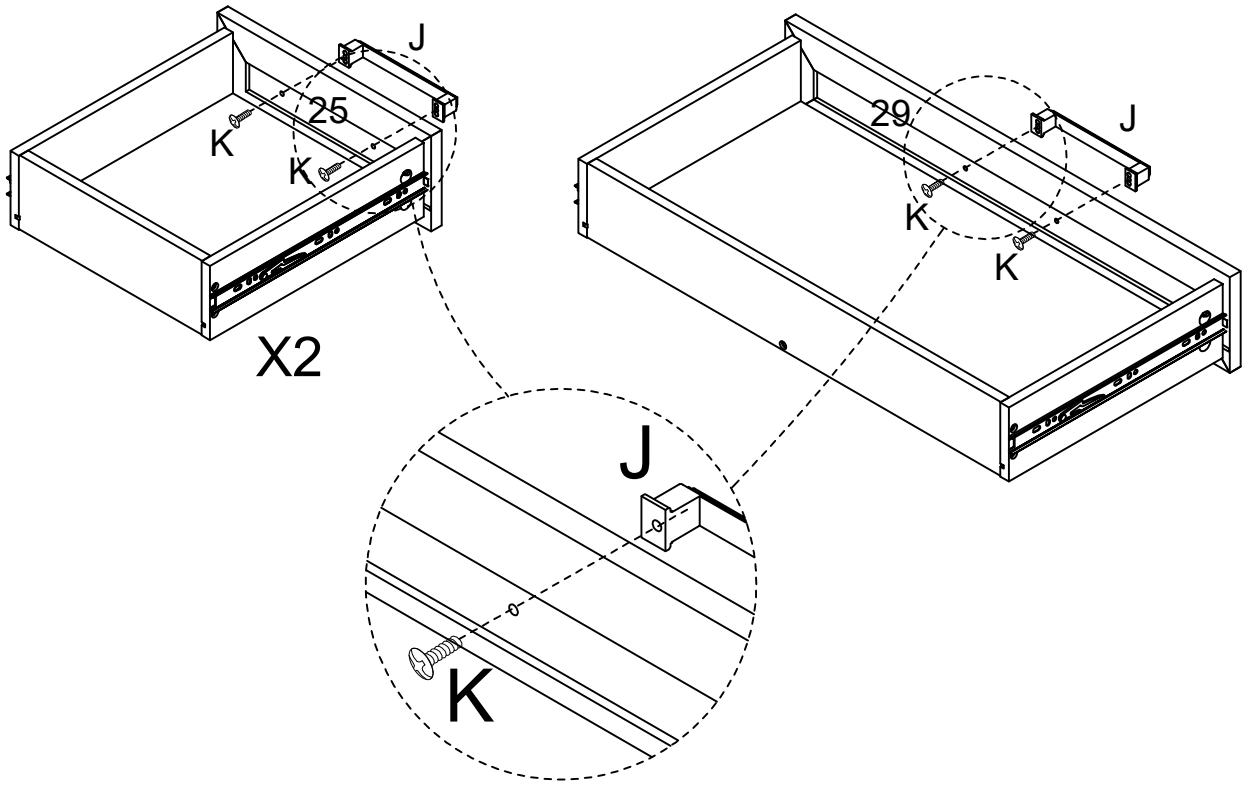

K	J
X6	X3

Step 36

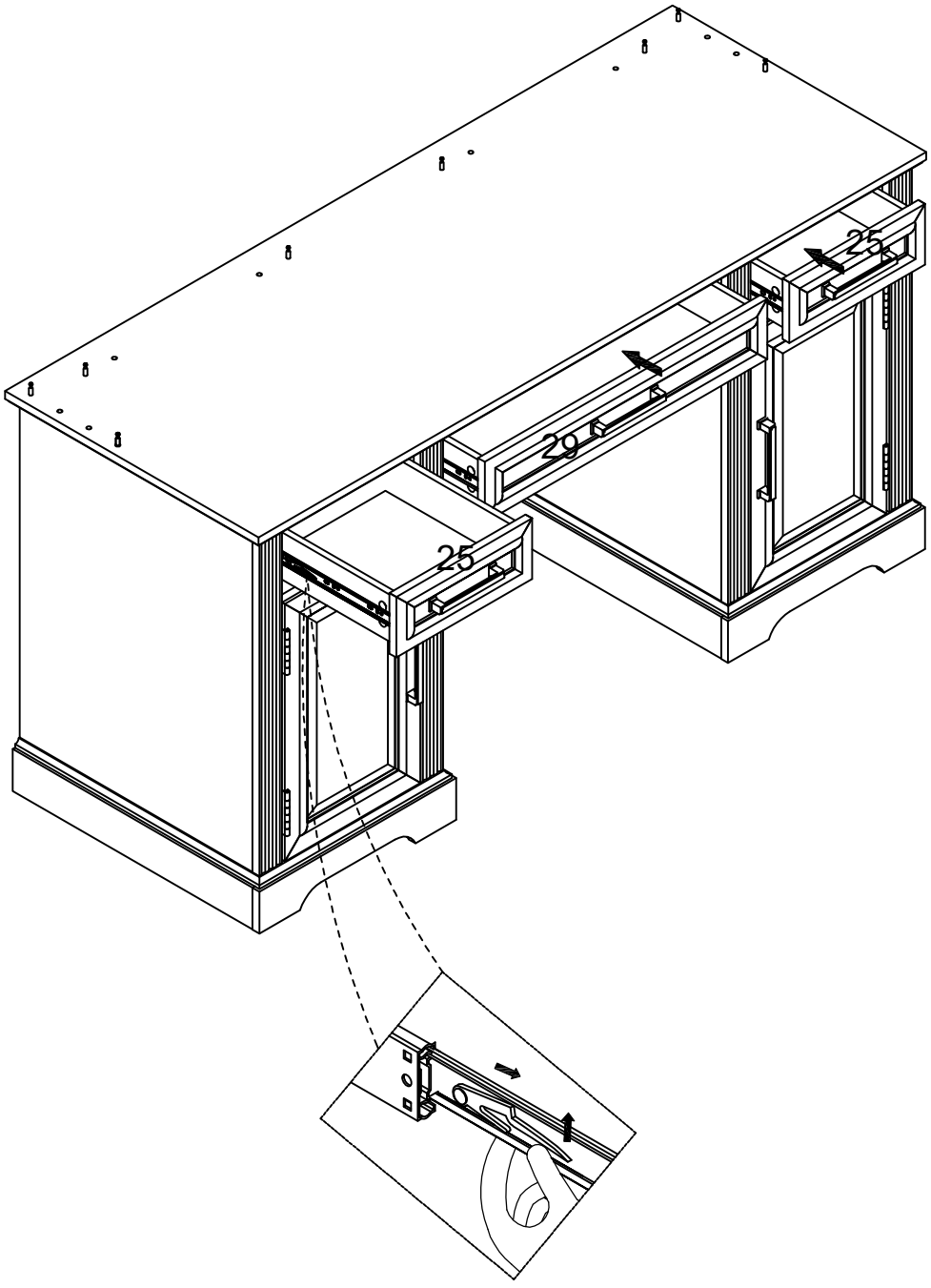

Step 37

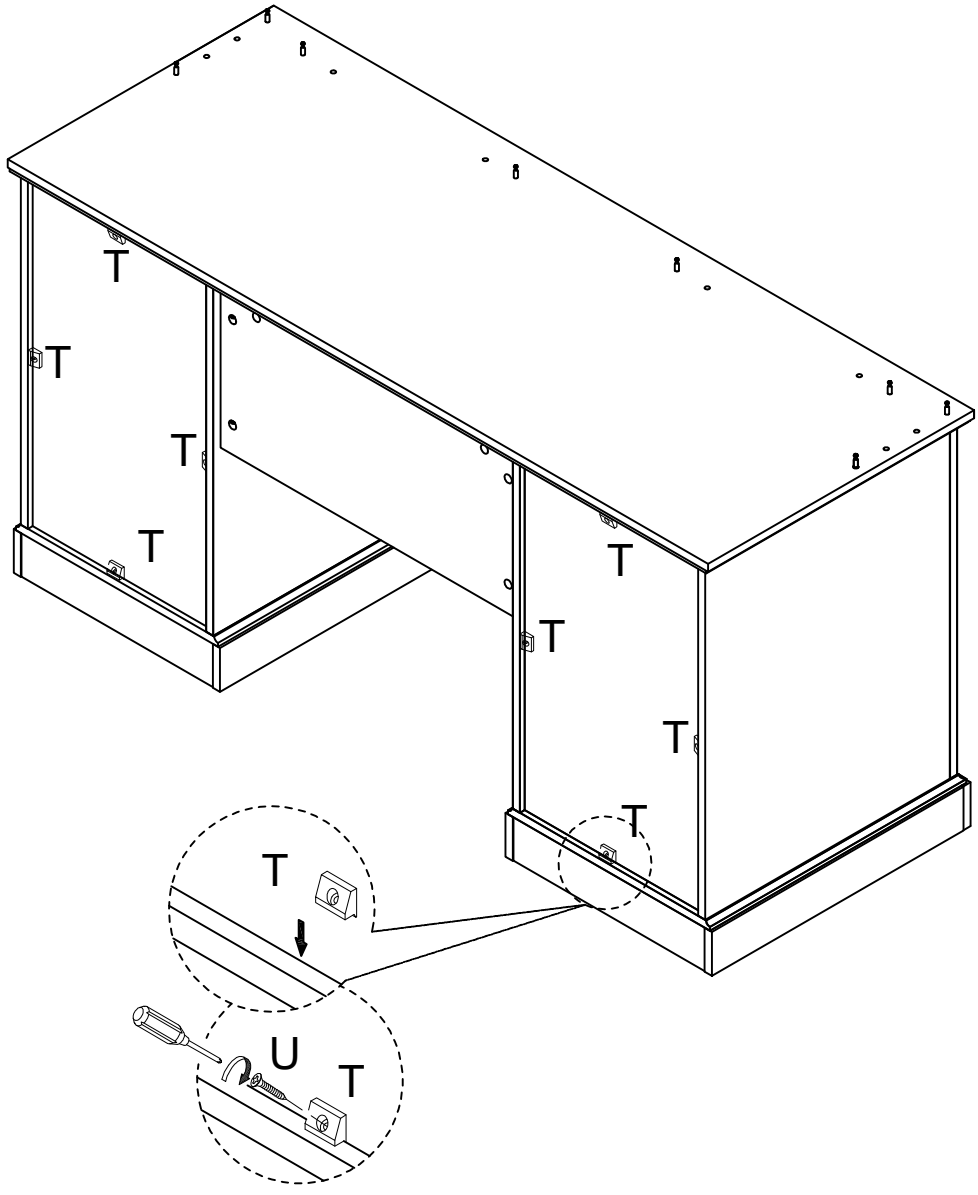

U	T
X8	X8

Step 38

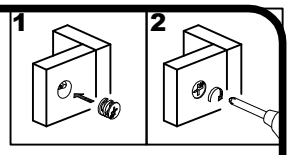

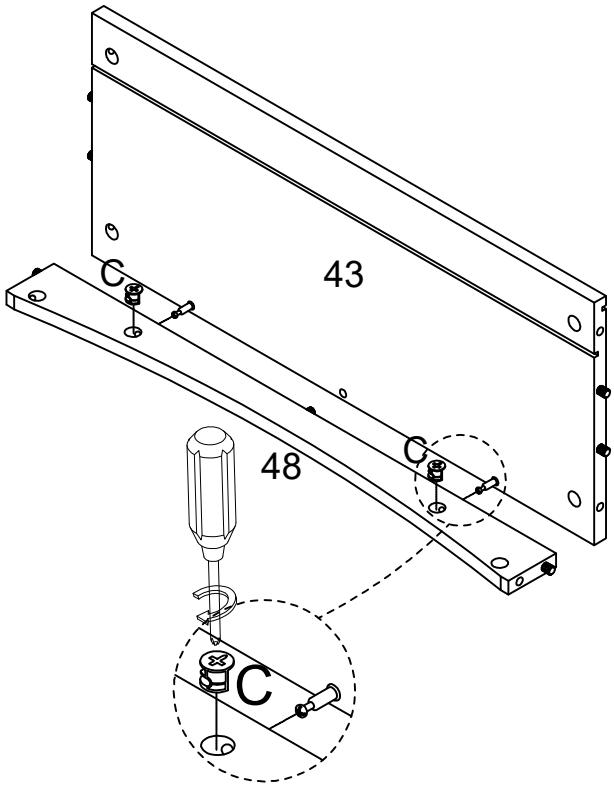

C
X2

Step 39

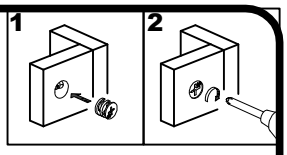

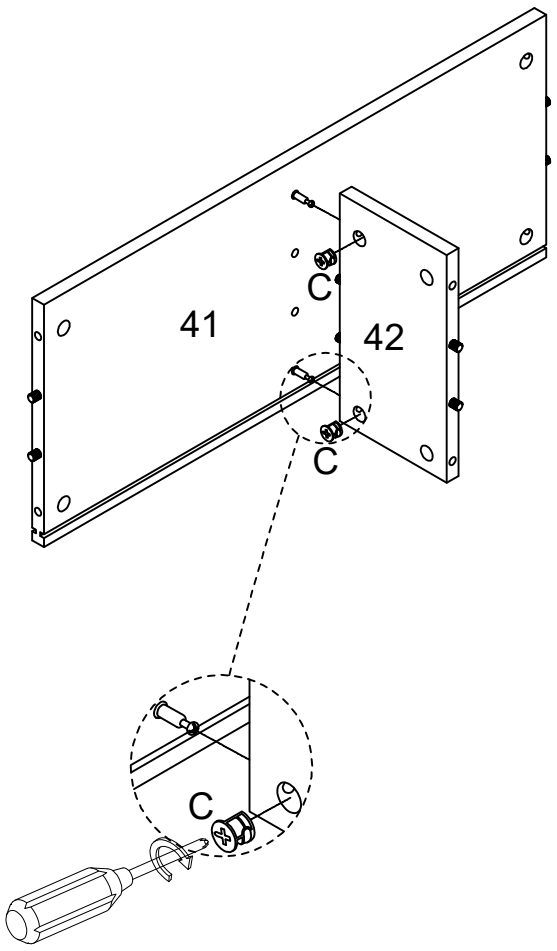

C
X2

Step 40

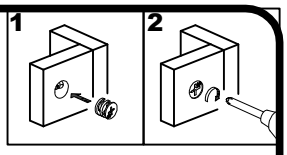

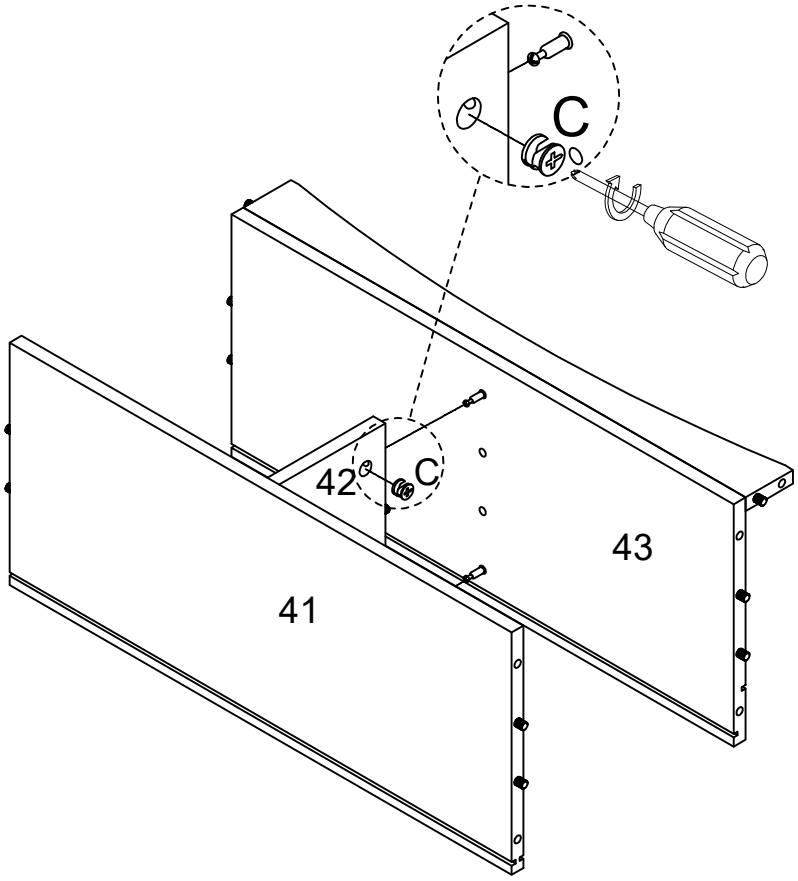

C
X2

Step 41

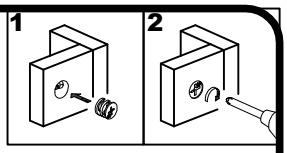

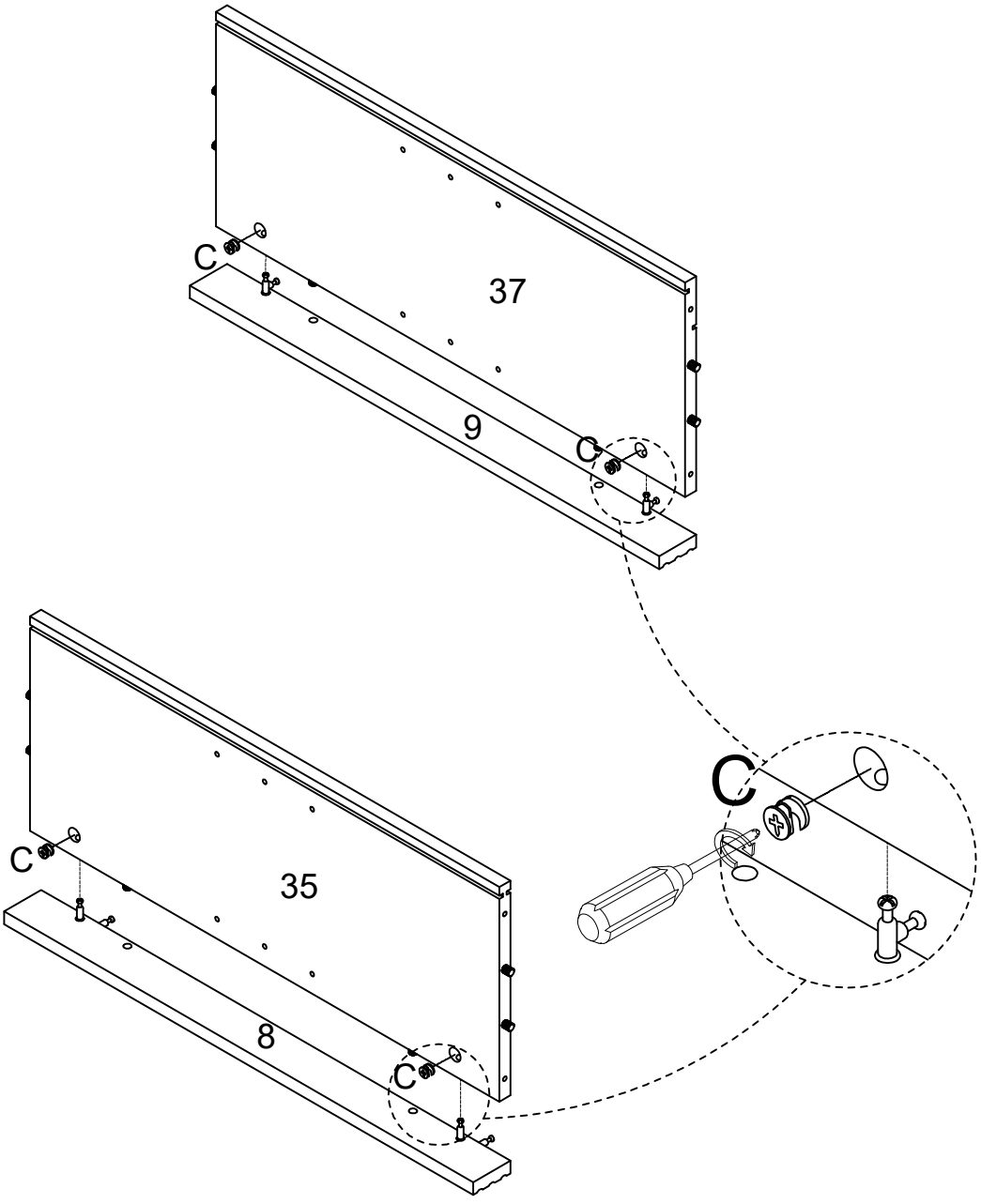

C
X4

Step 42

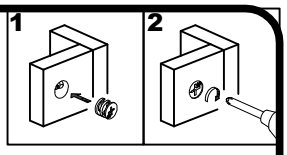

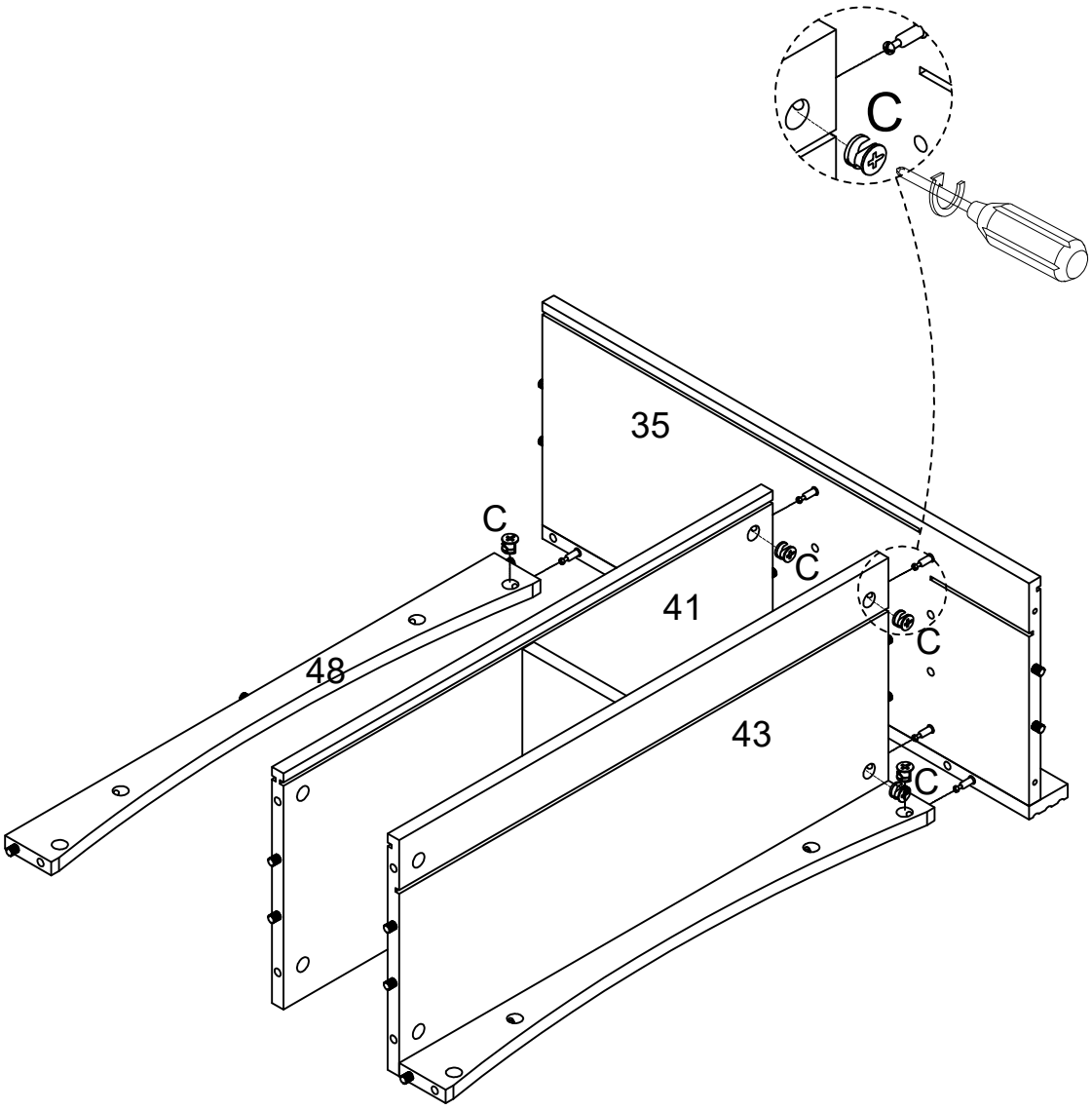

C
X6

Step 43

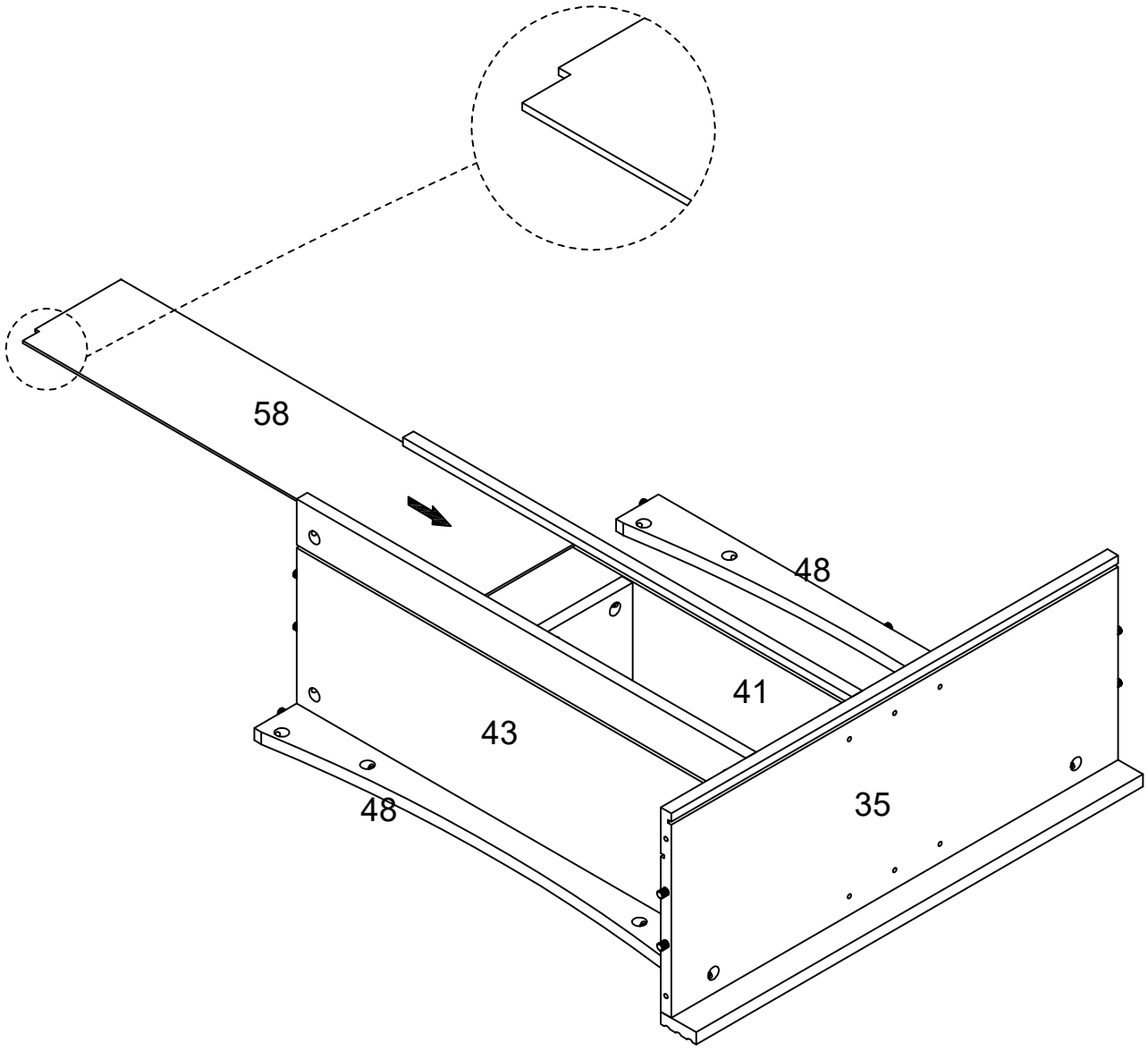

Step 44

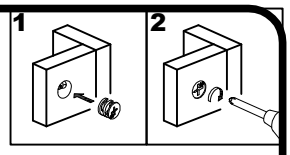

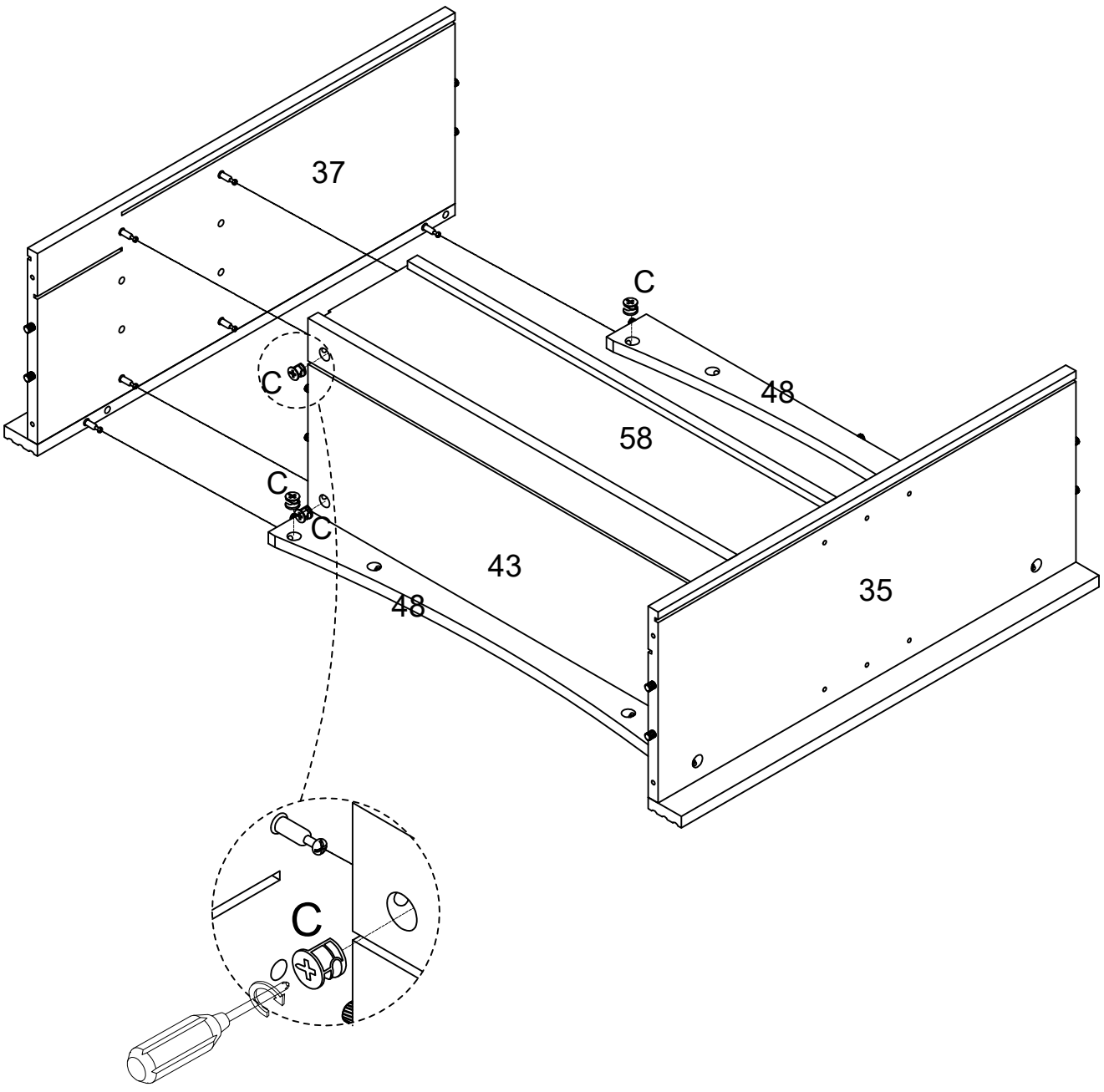

C
X4

Step 45

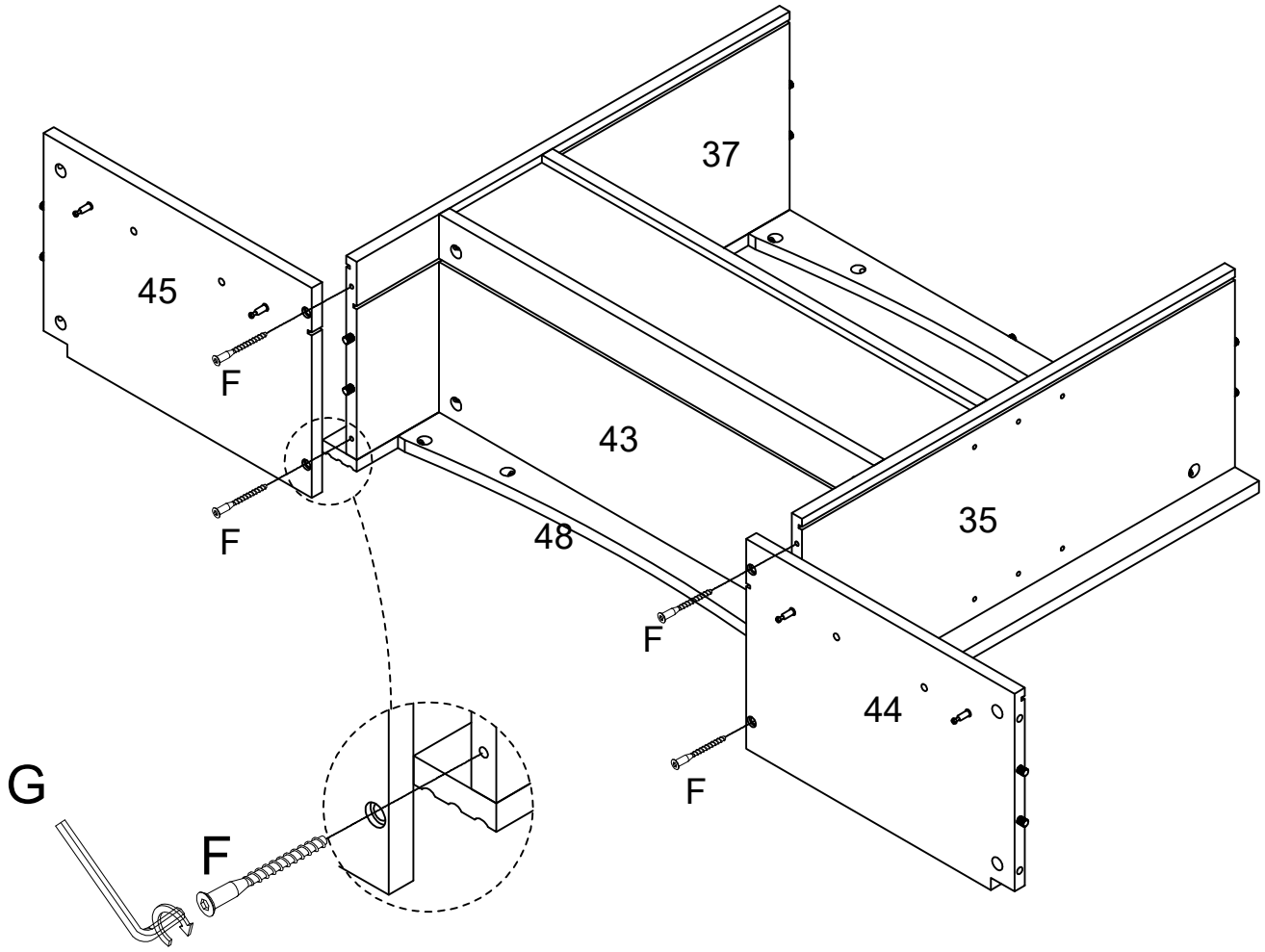

G	F
X1	X4

Step 46

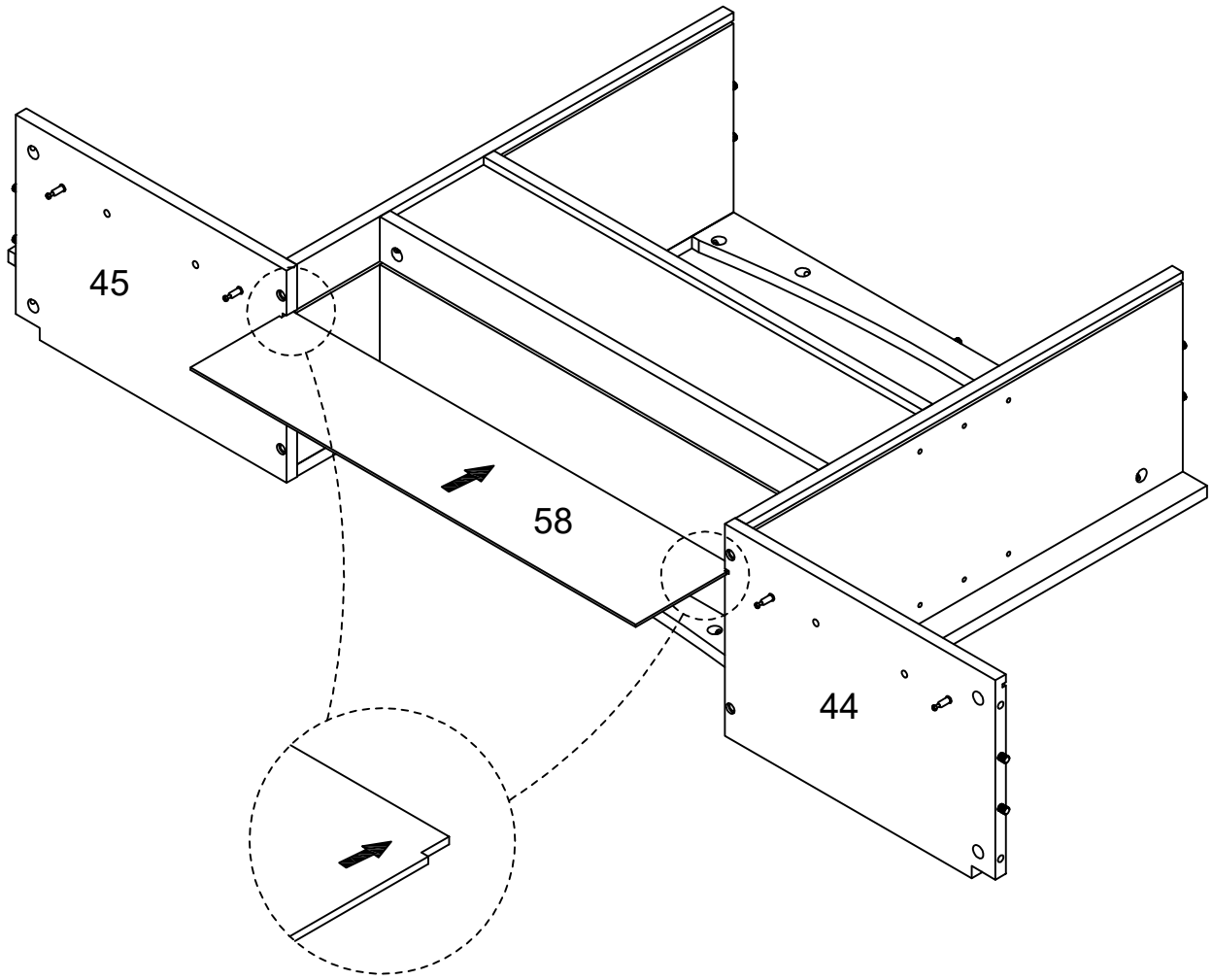

Step 47

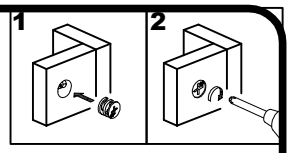

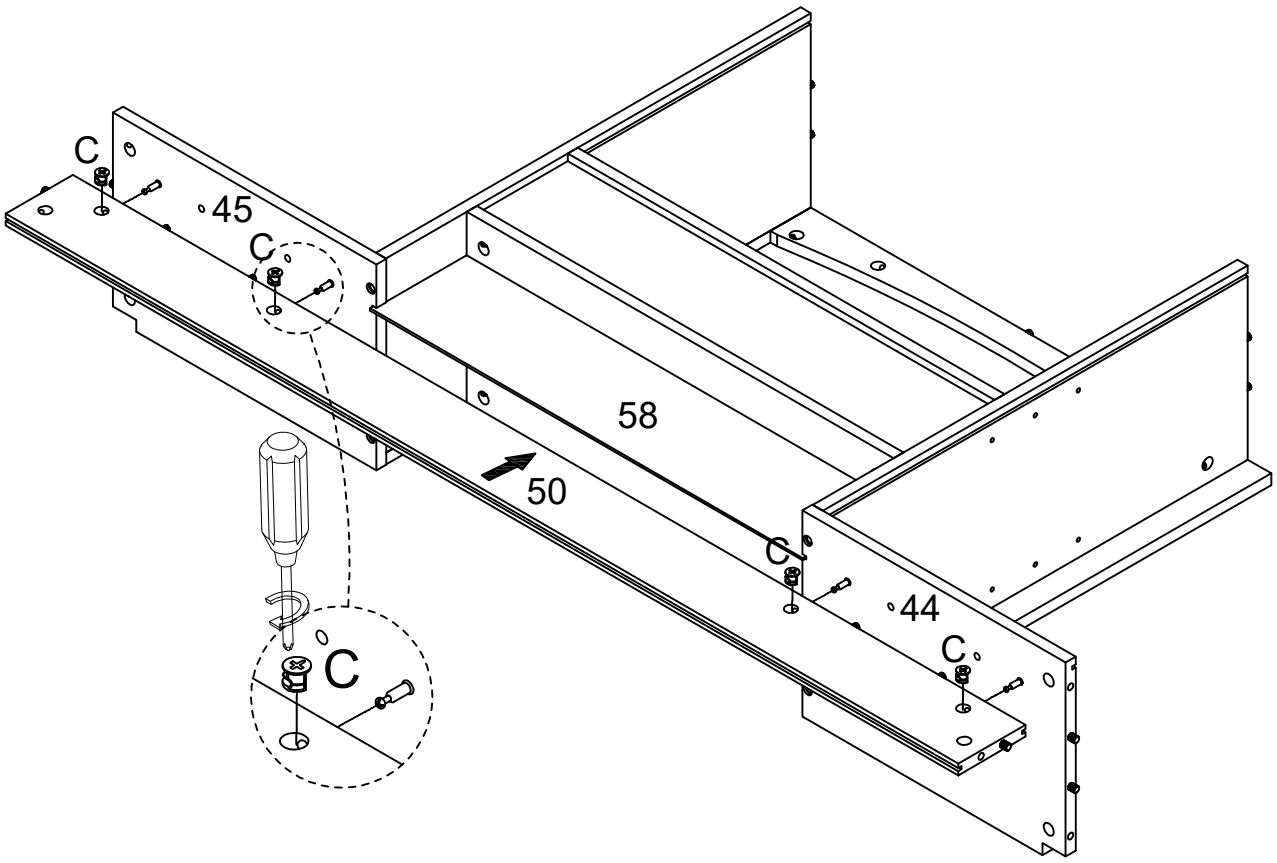

C
X4

Step 48

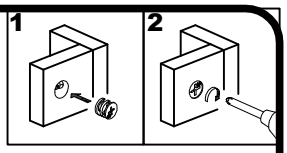

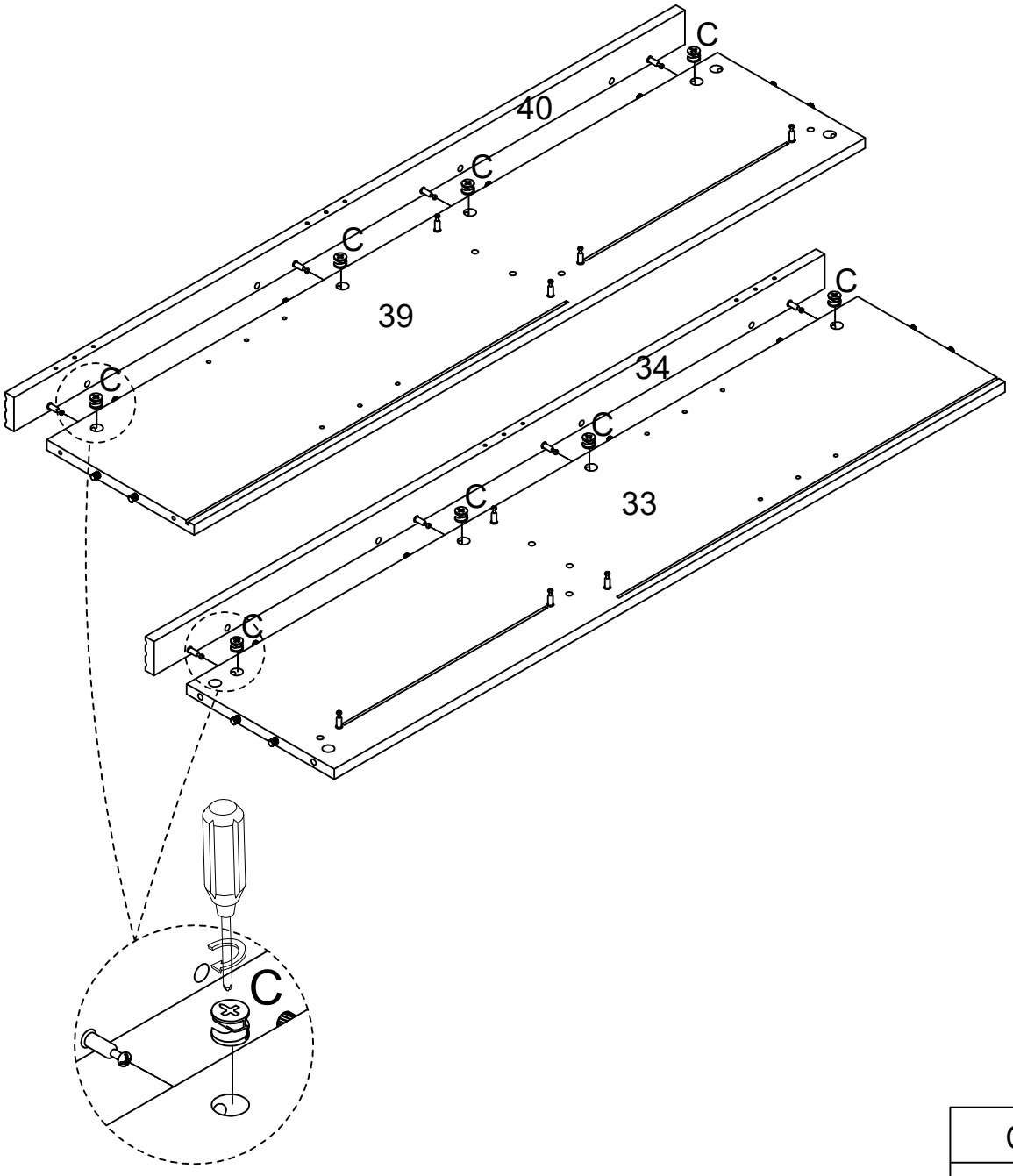

C
X8

Step 49

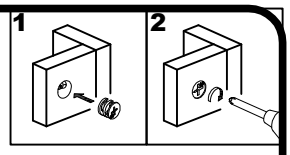

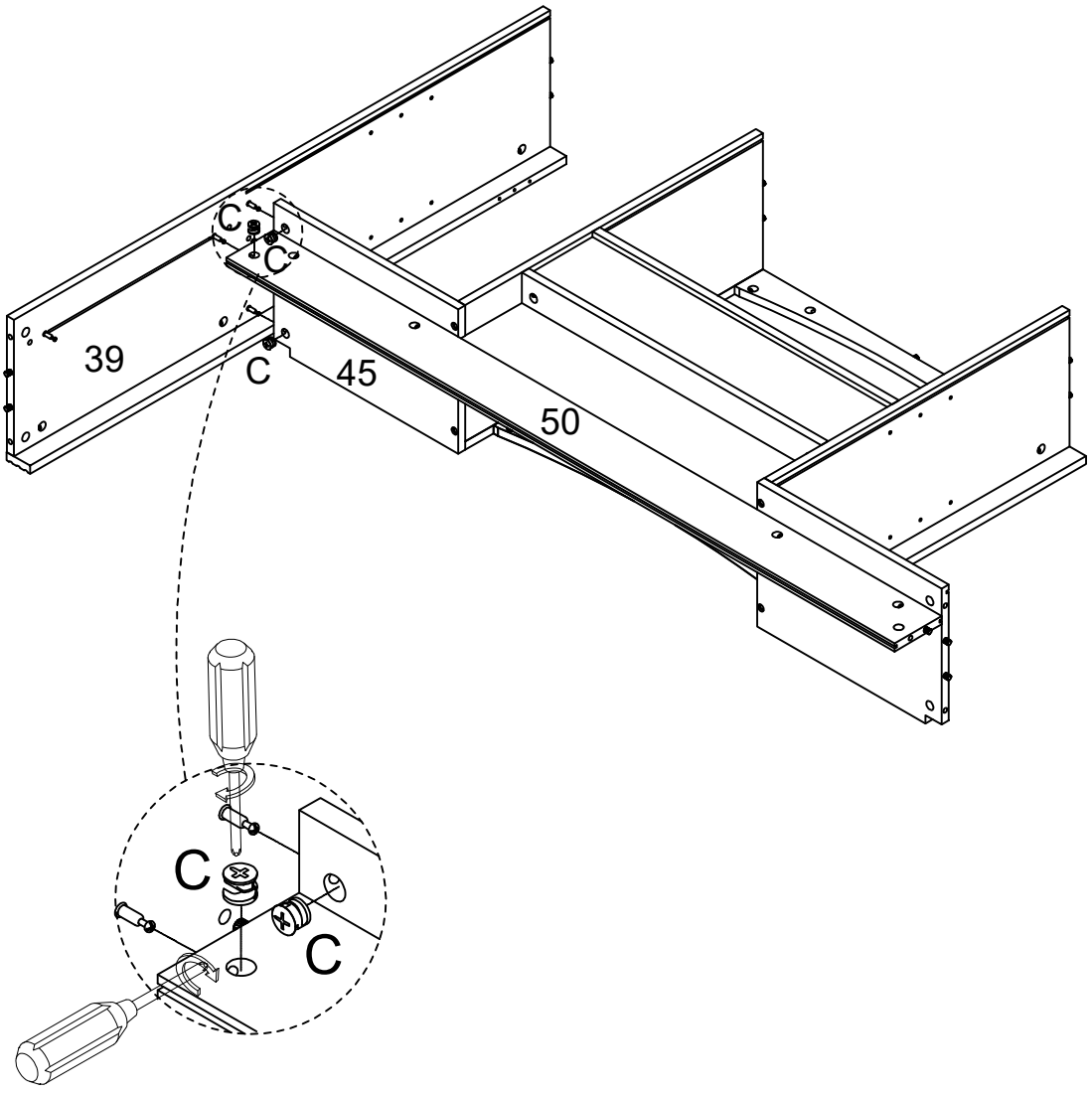

C
X3

Step 50

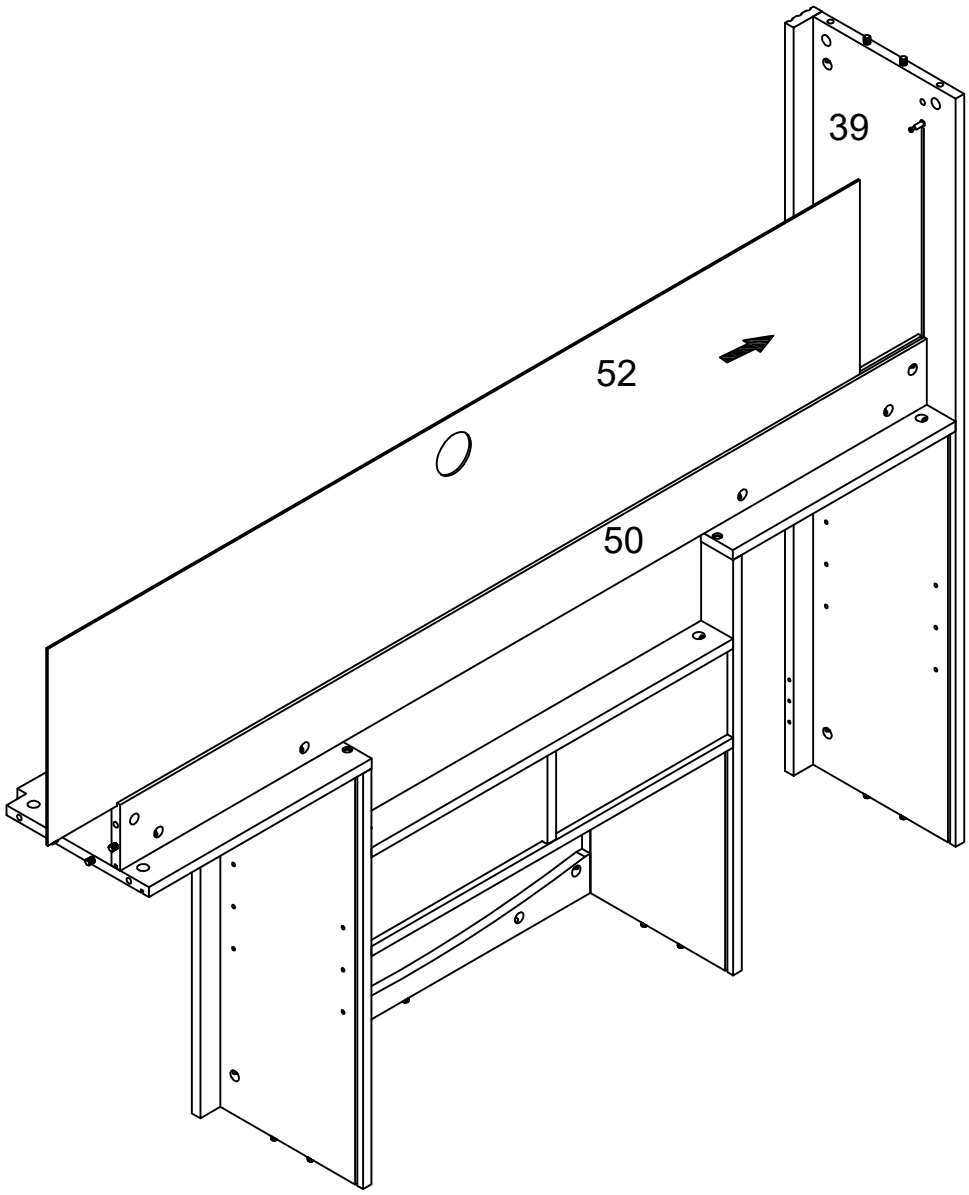

Step 51

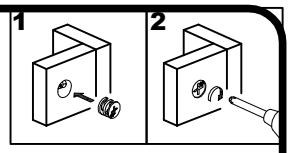

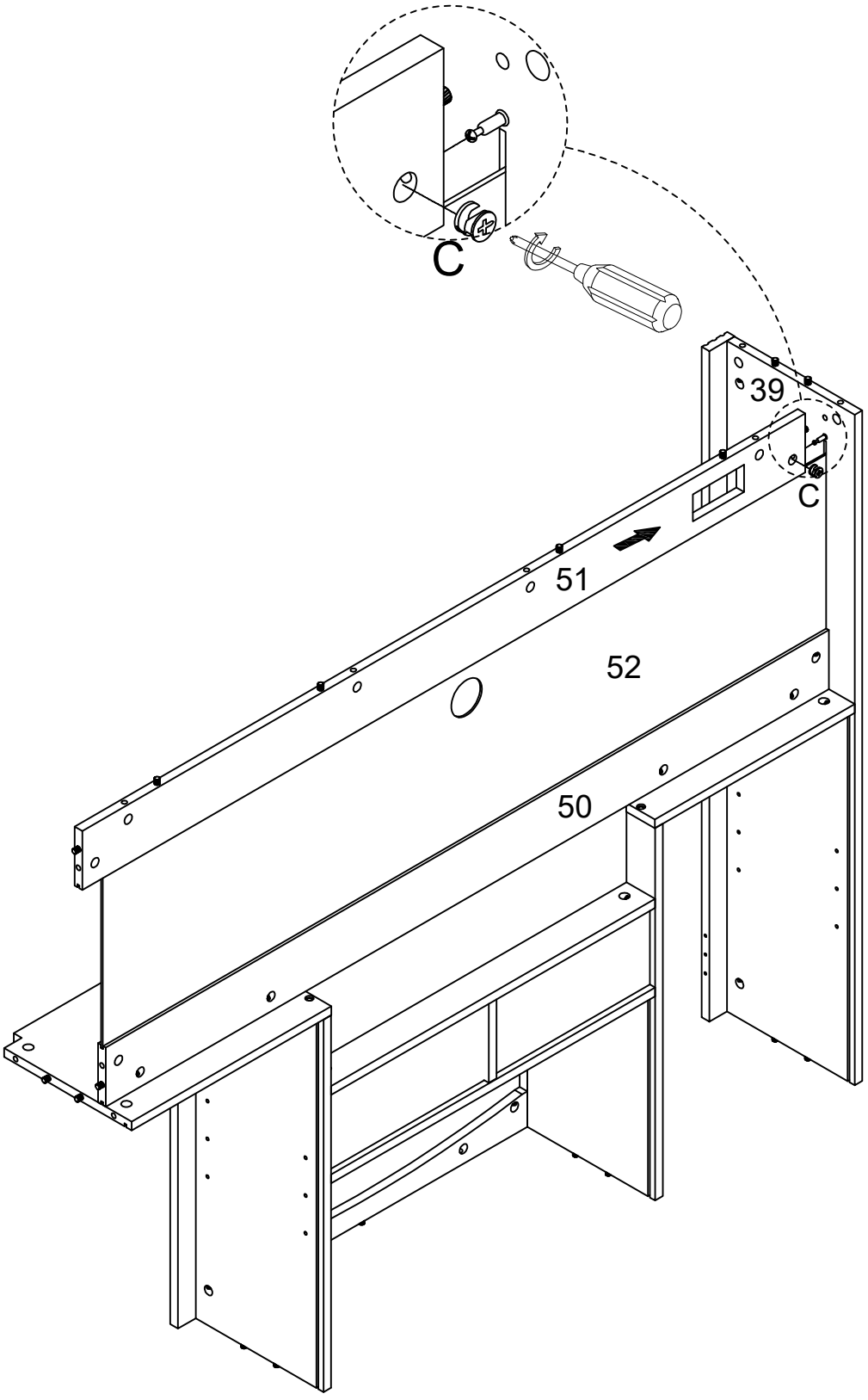

C
X1

Step 52

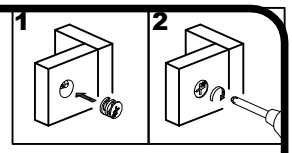

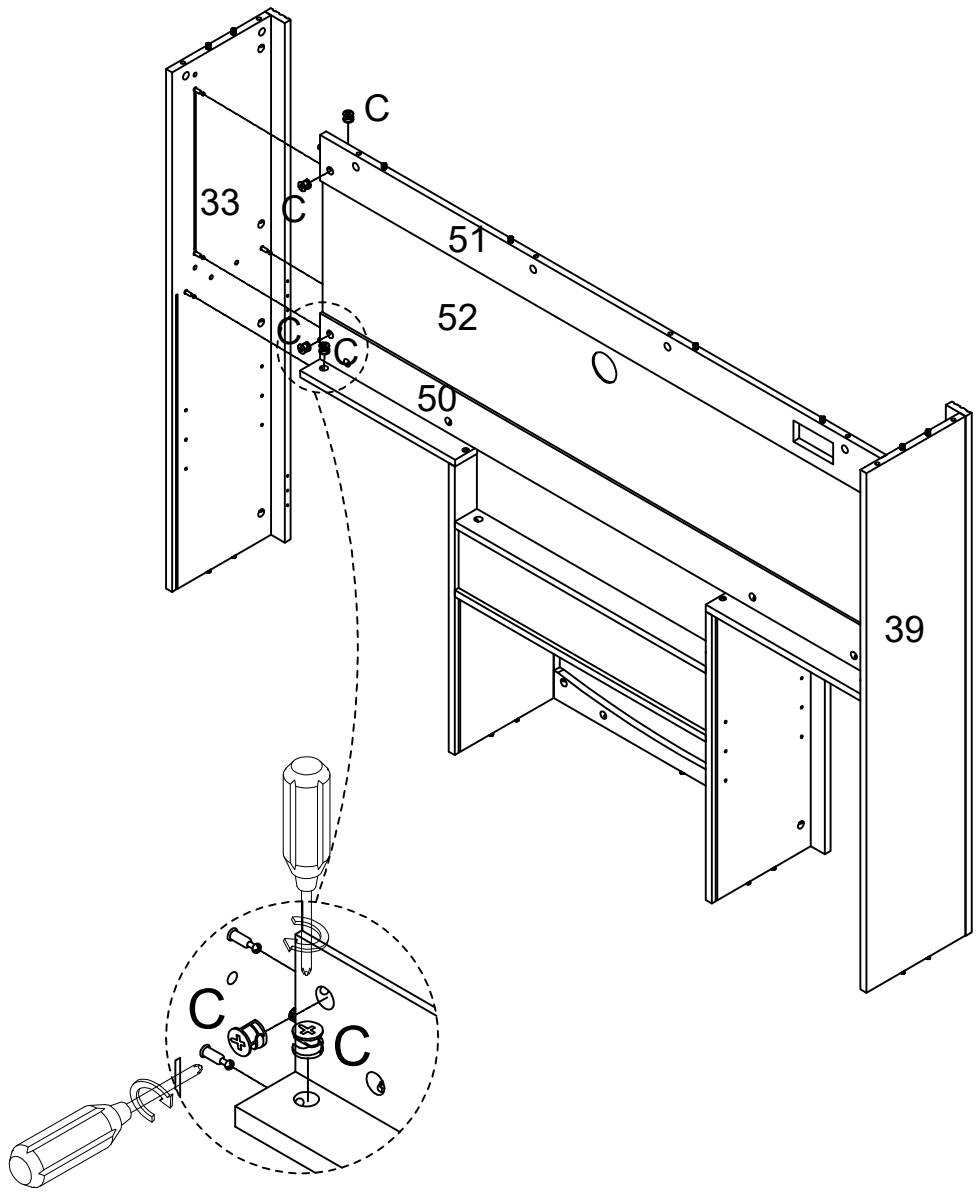

C
X4

Step 53

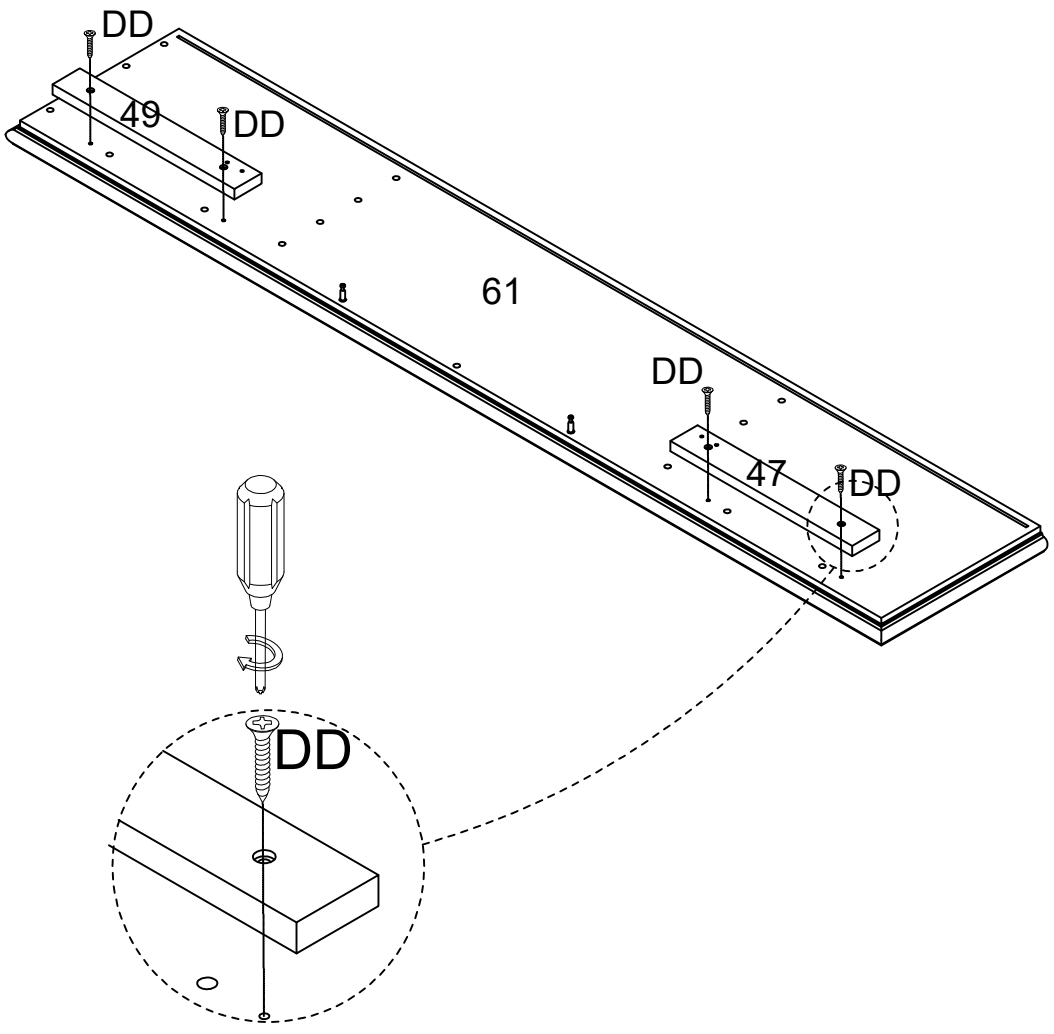

DD
X4

Step 54

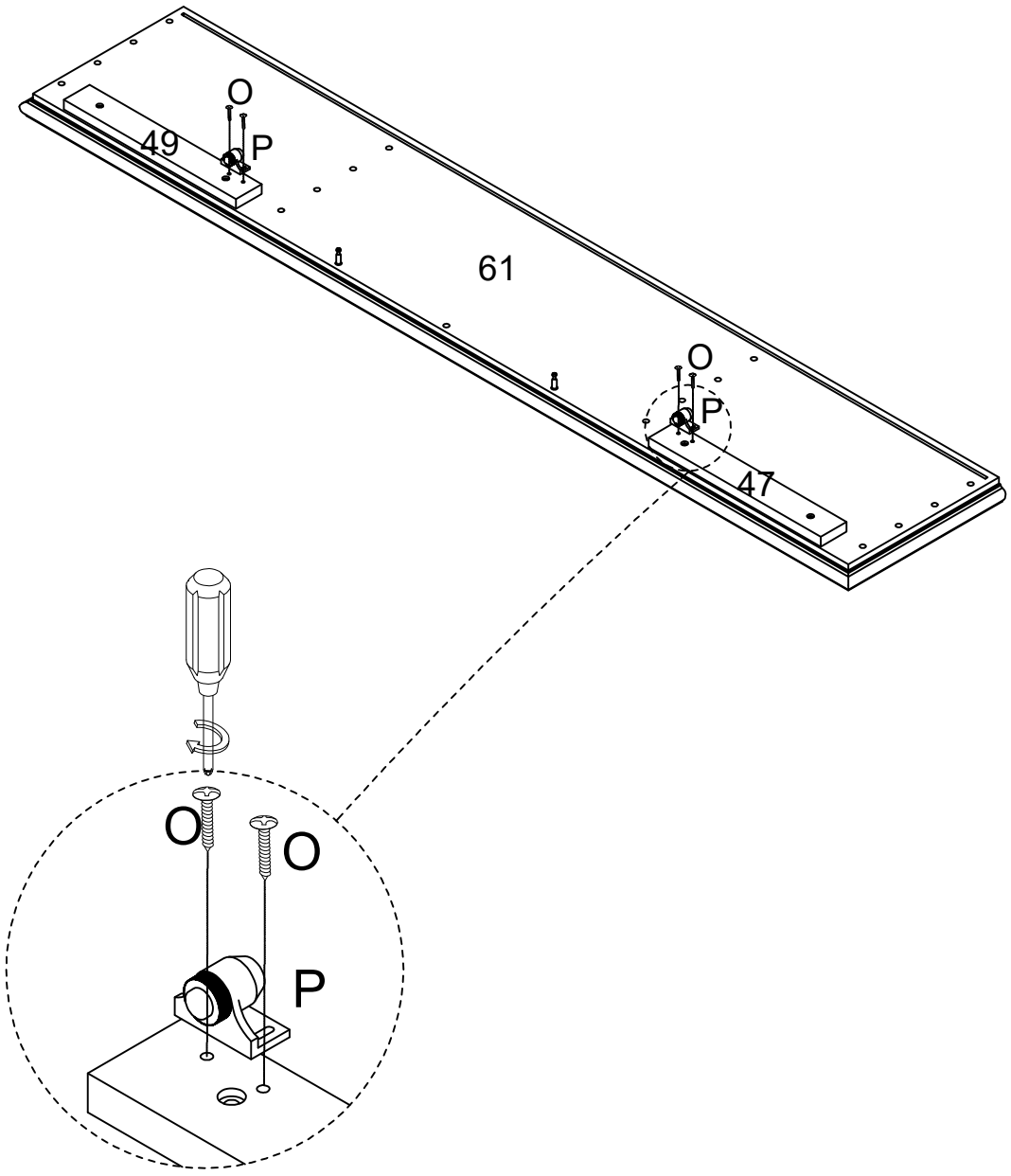

P	O
X2	X4

Step 55

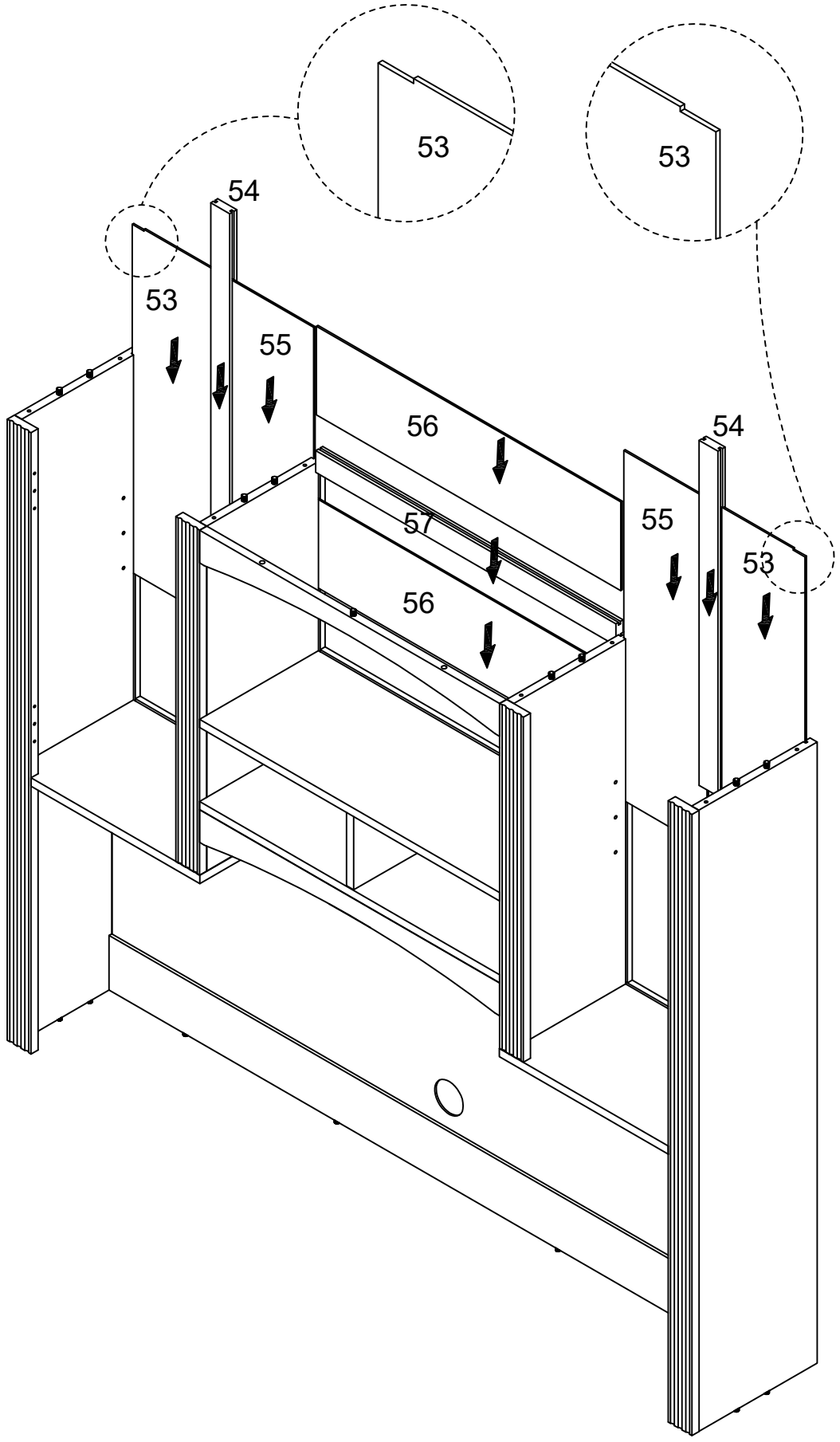

Step 56

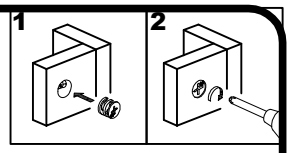

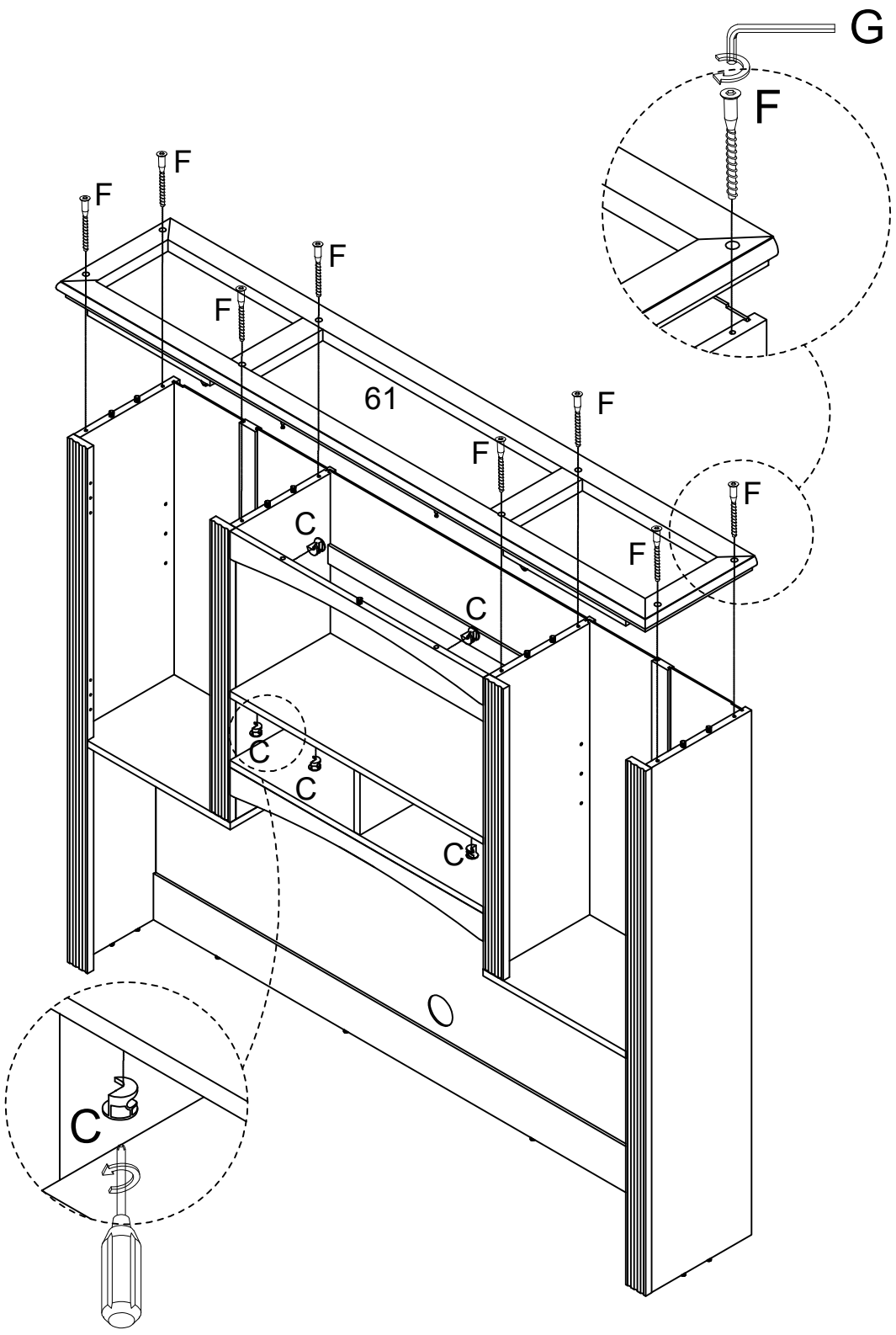

C	G	F
	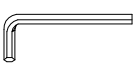	
X6	X1	X8

Step 57

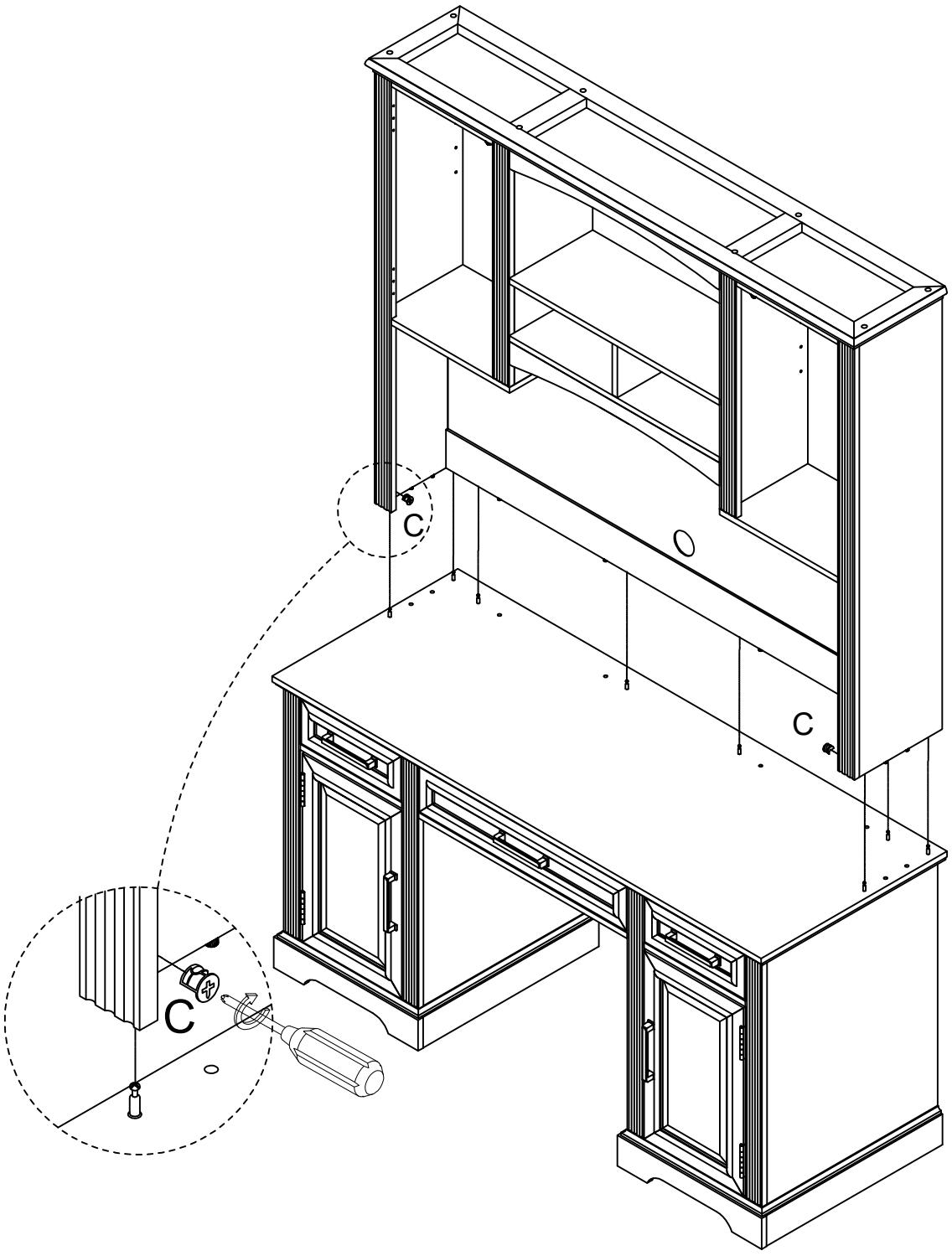

C
X2

Step 58

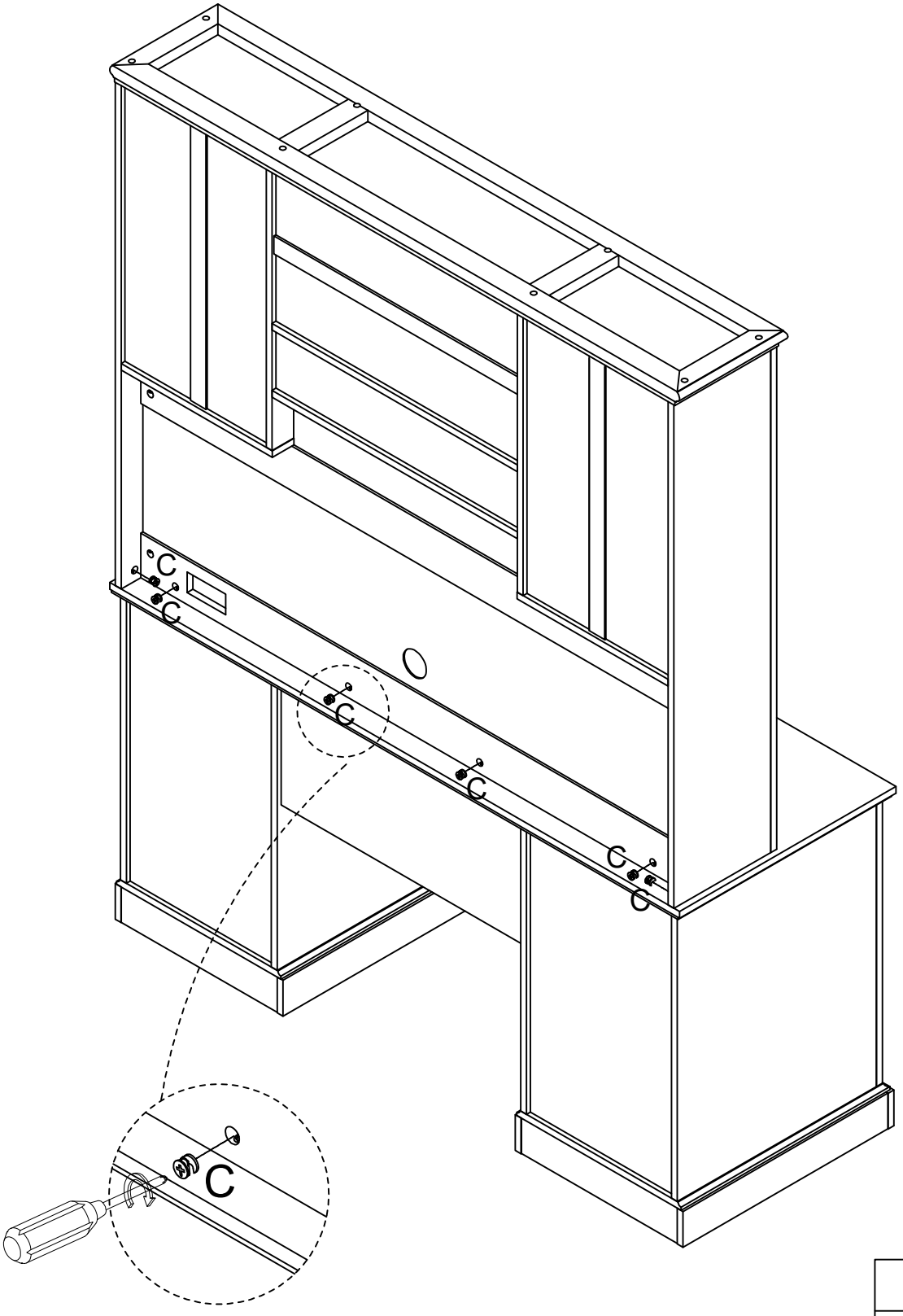

C
X6

Step 59

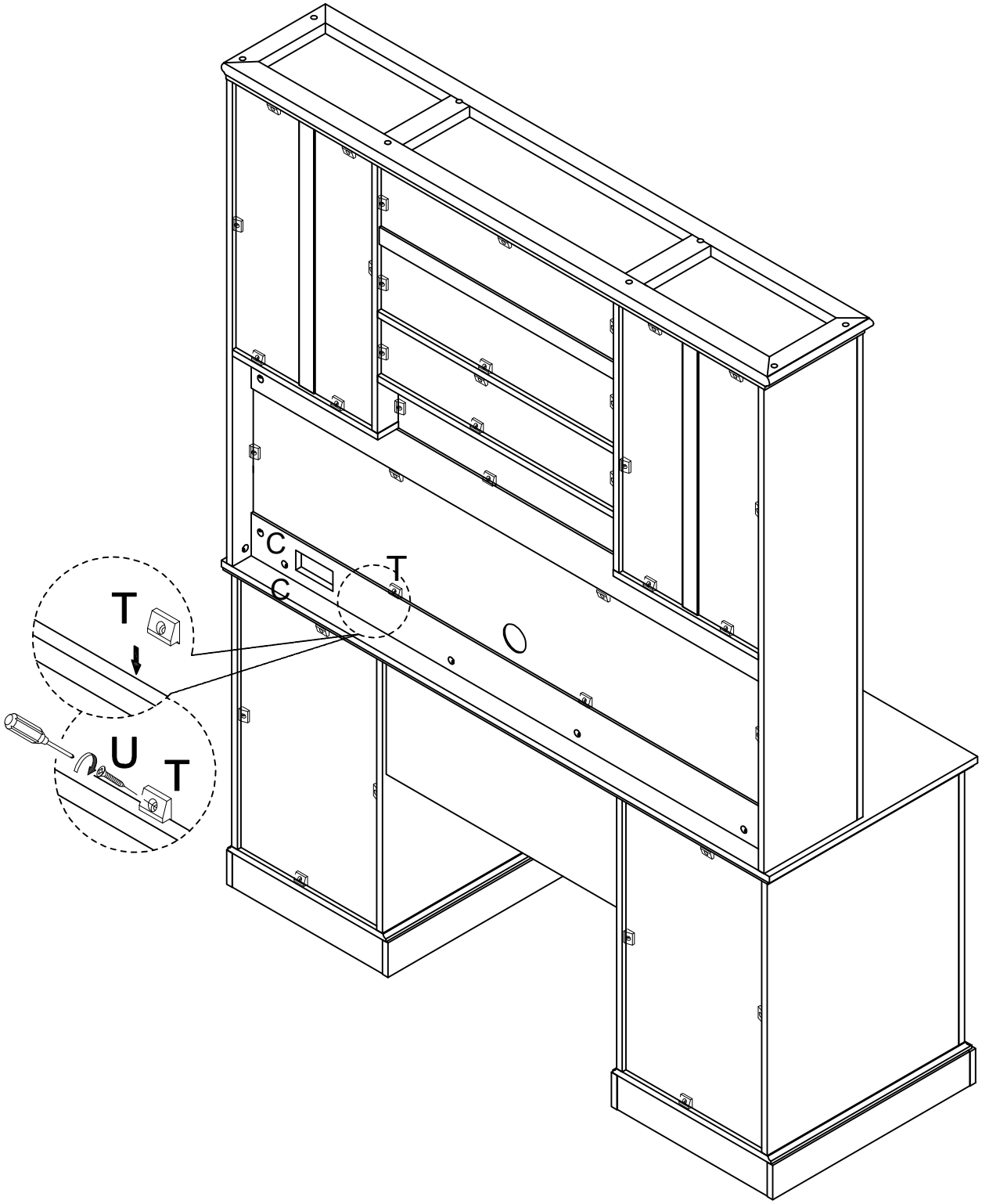

U	T
X32	X32

Step 60

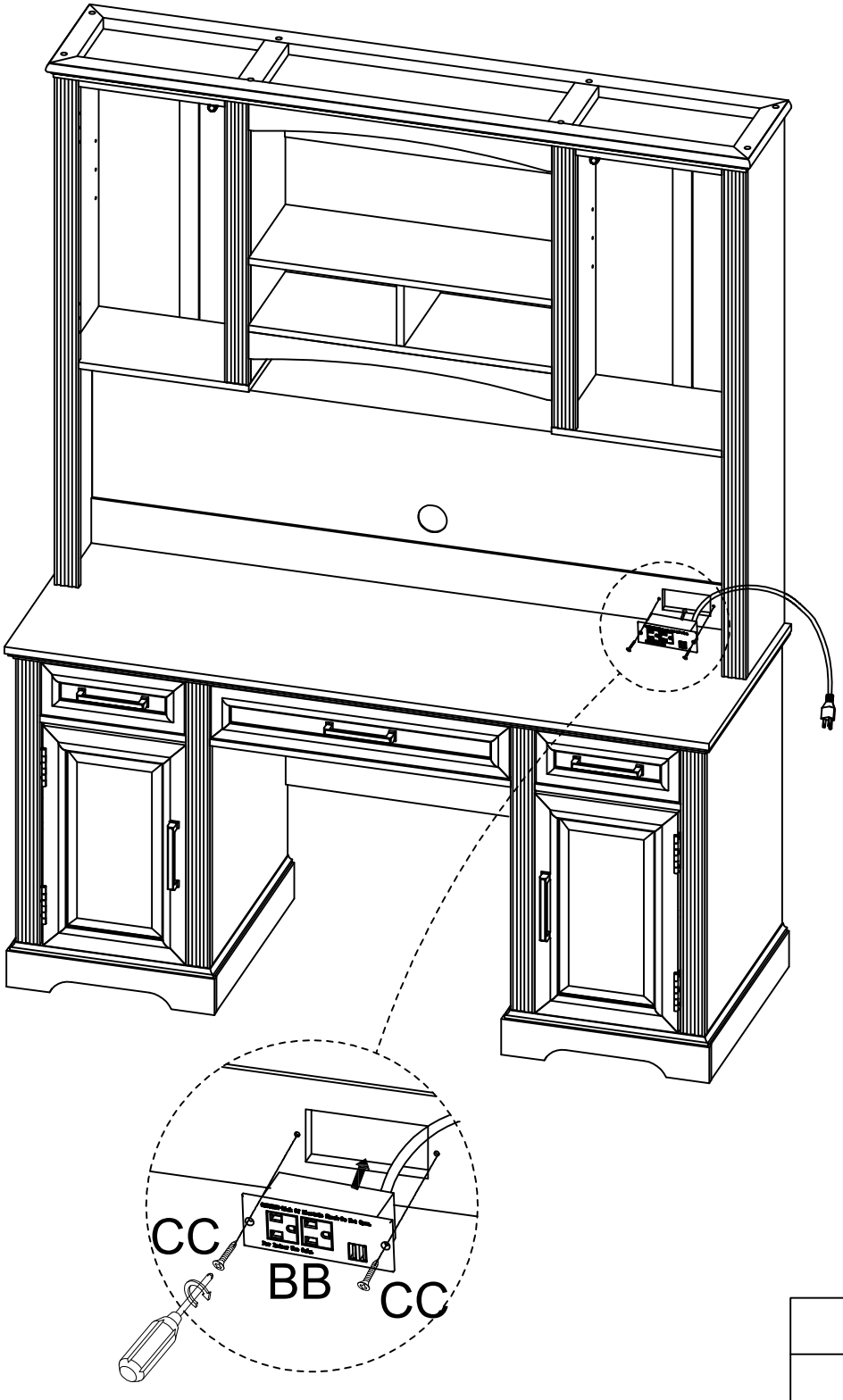

CC	BB
X2	X1

Step 61

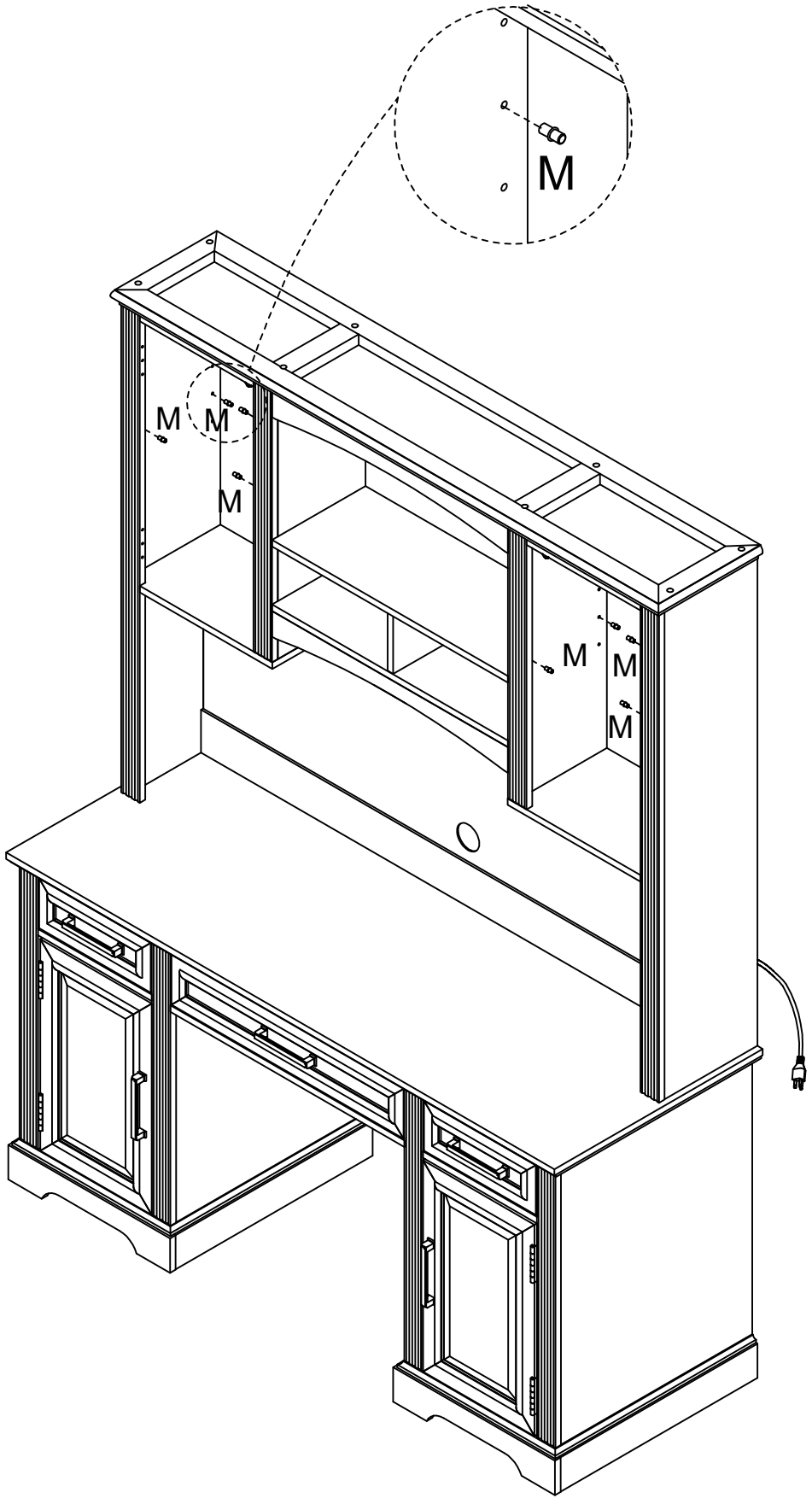

M
X8

Step 62

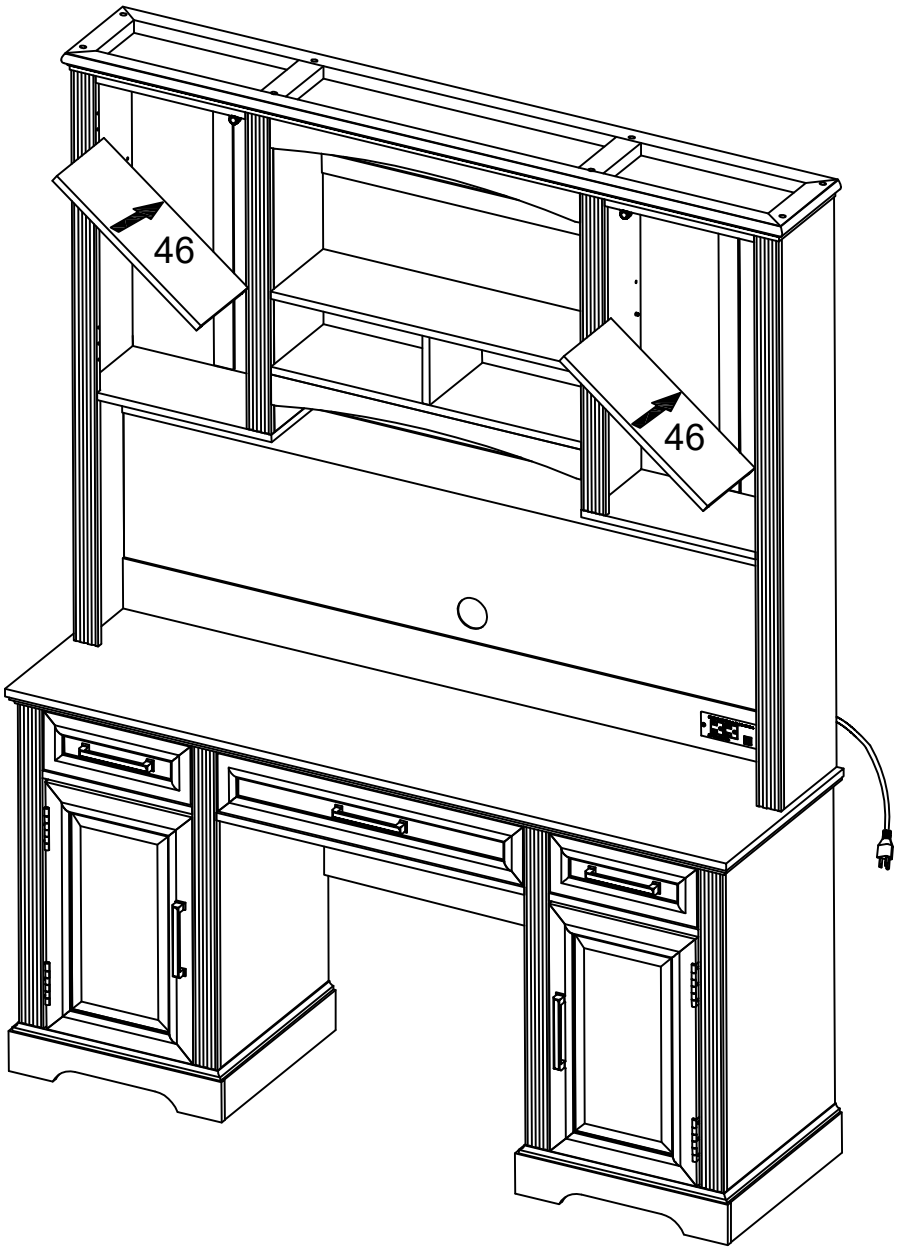

Step 63

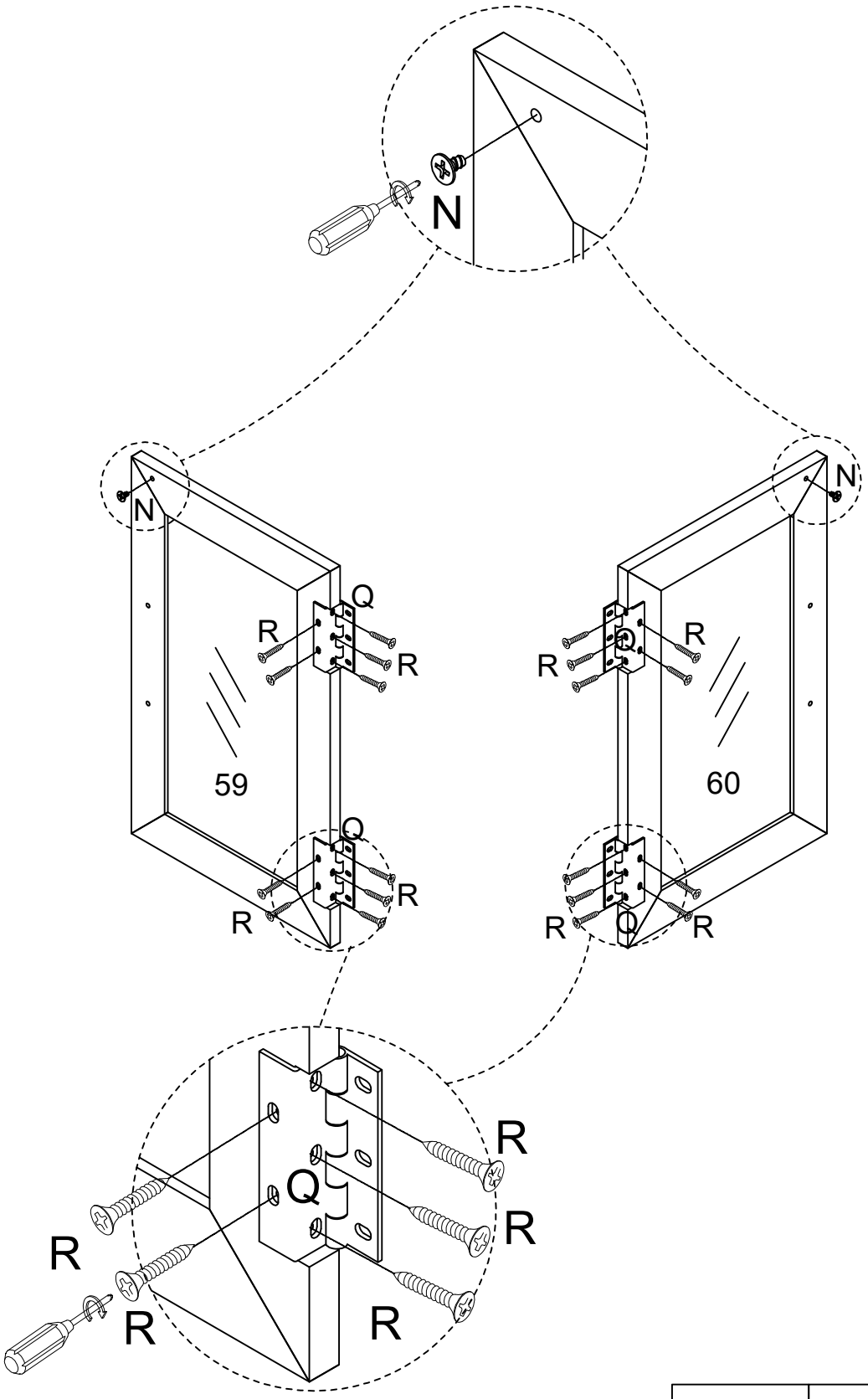

R	Q	N
X20	X4	X2

Step 64

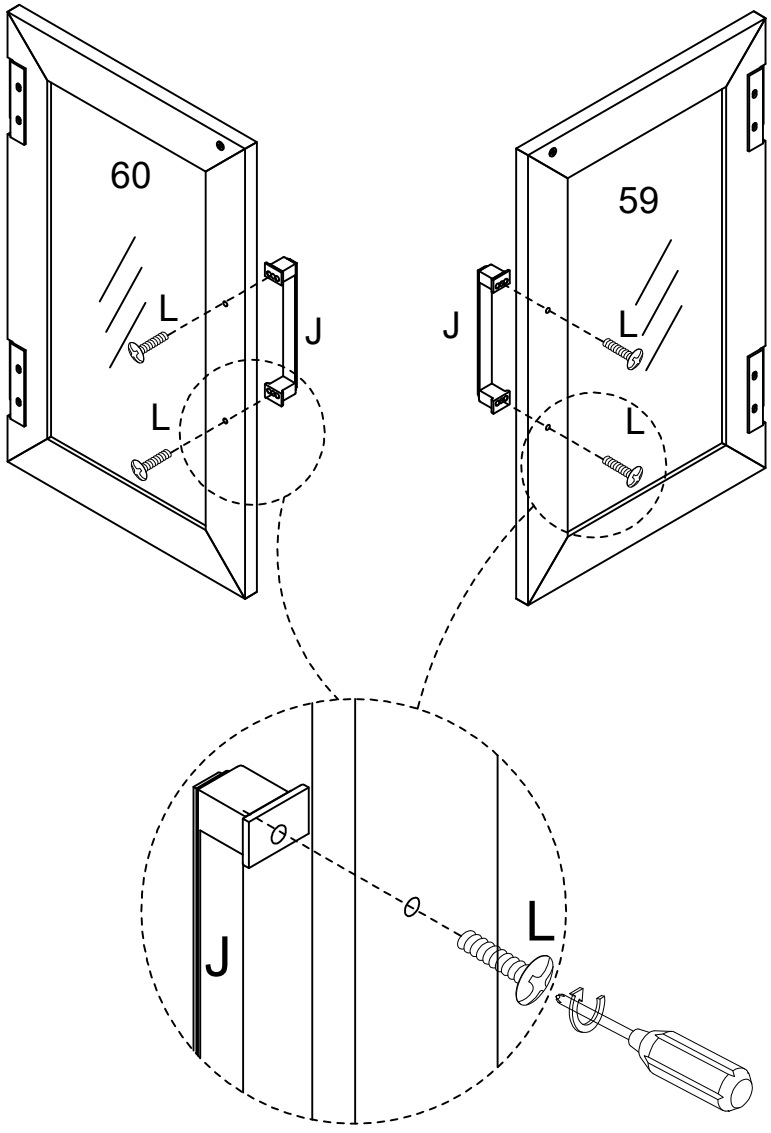

L	J
X4	X2

Step 65

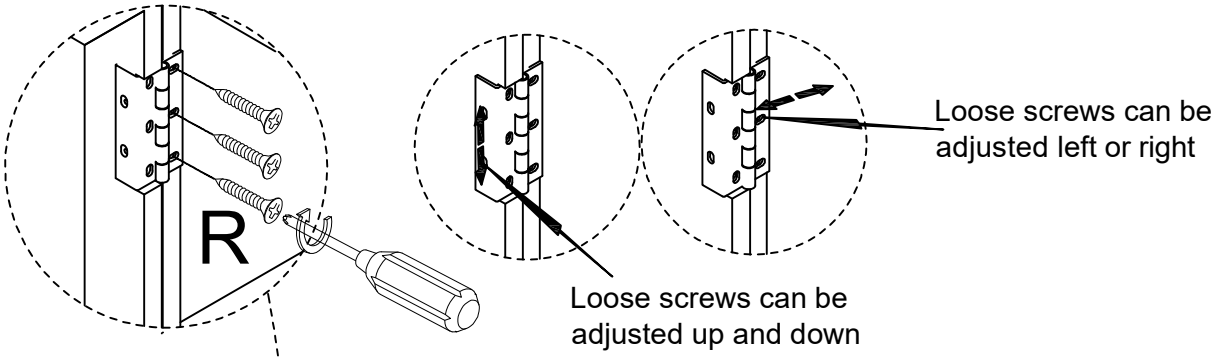
R
Loose screws can be adjusted left or right
Loose screws can be adjusted up and down

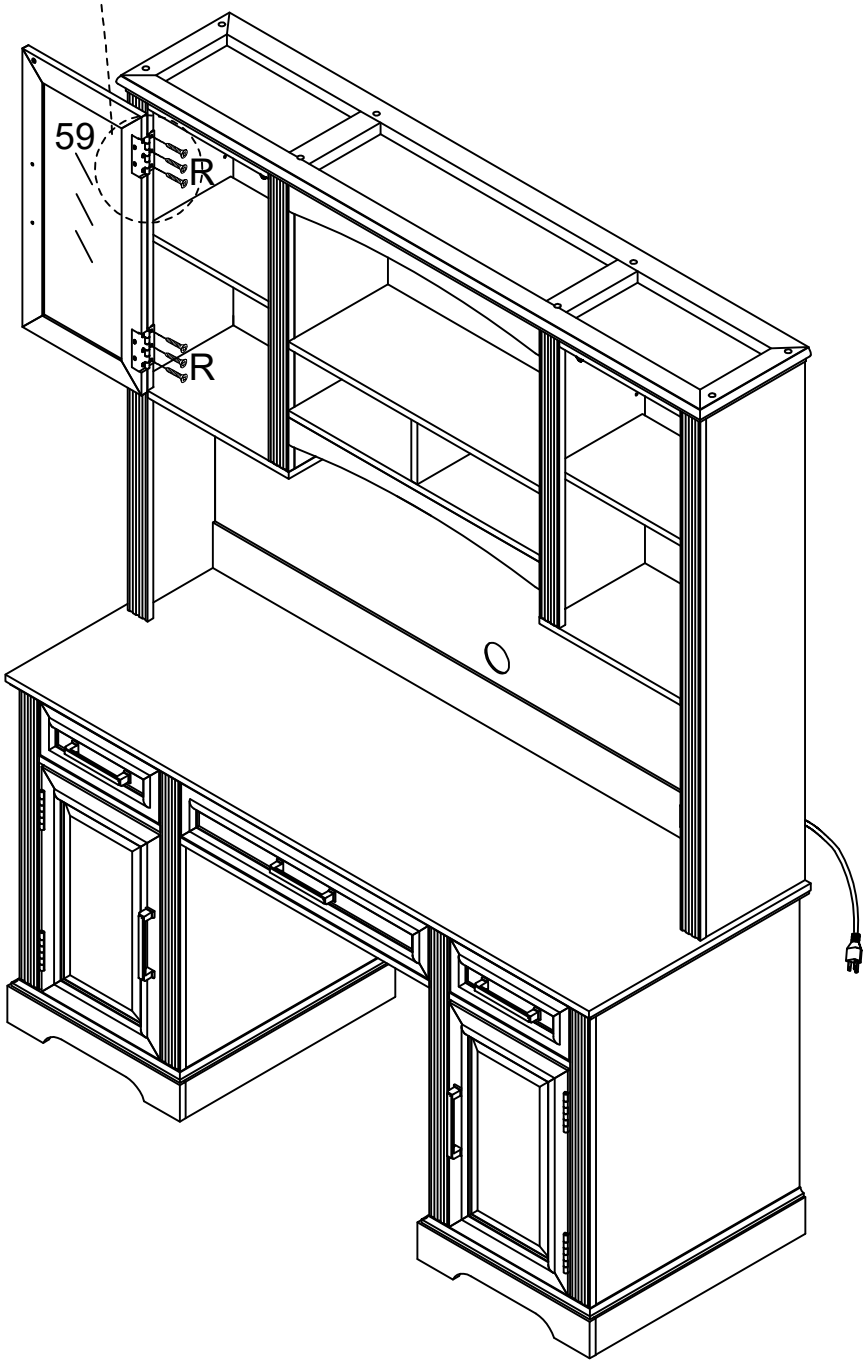
59
R
R

R
X6

Step 66

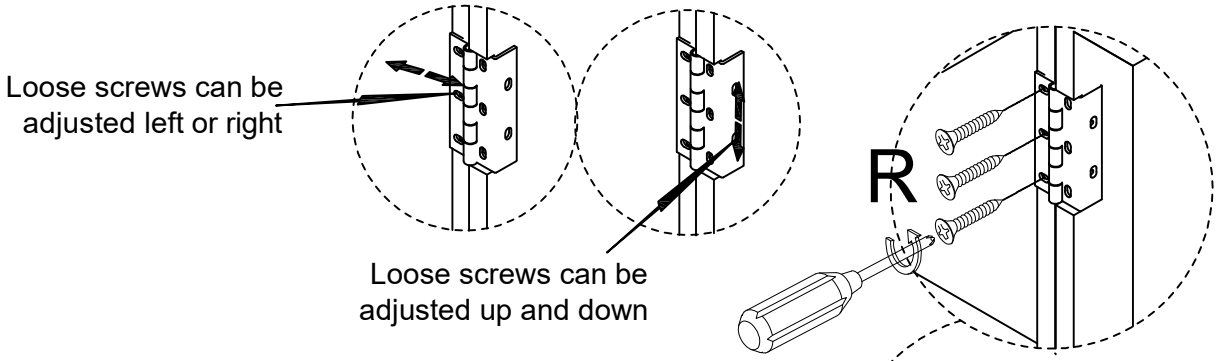
Loose screws can be
adjusted left or right
Loose screws can be
adjusted up and down
R

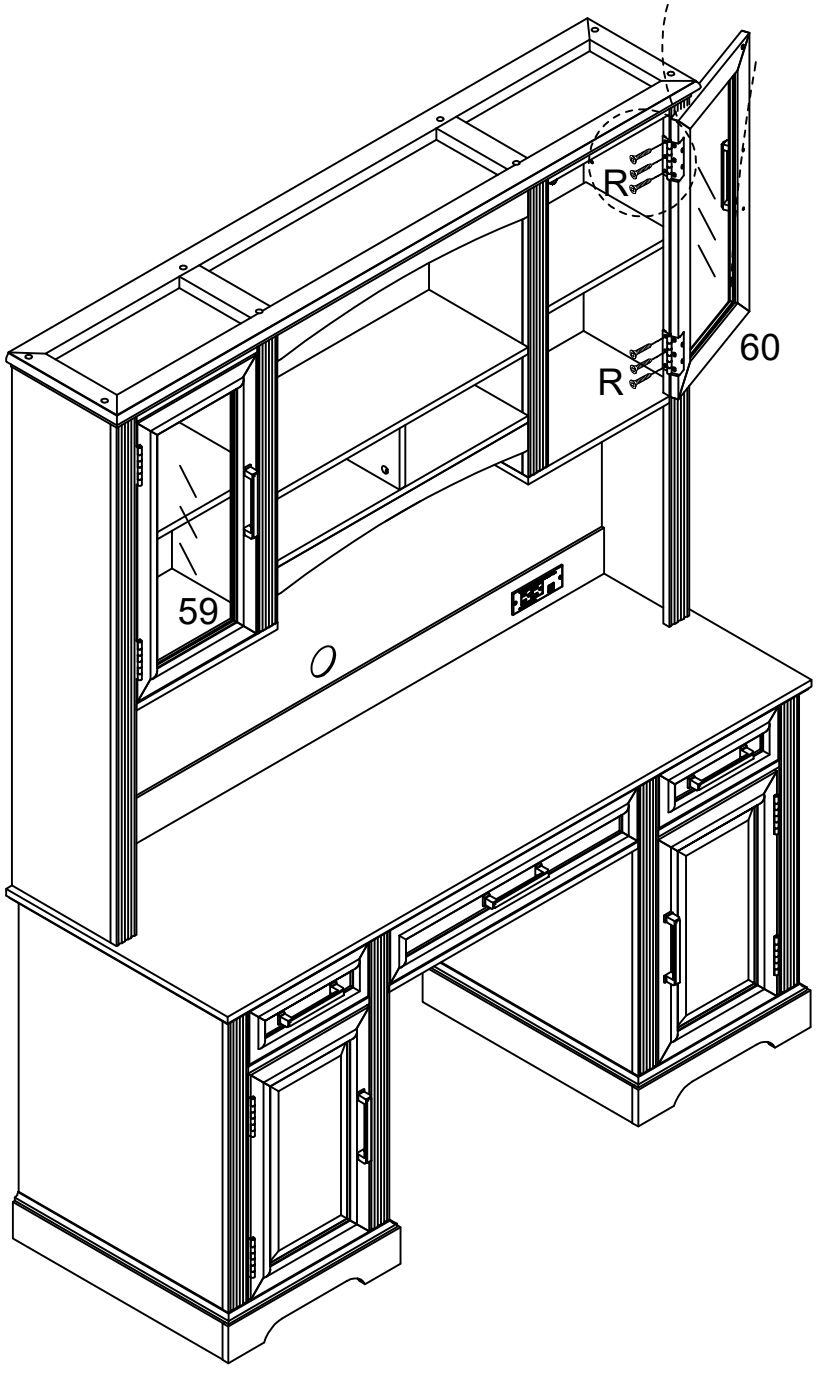
R
R
60
59

R
X6
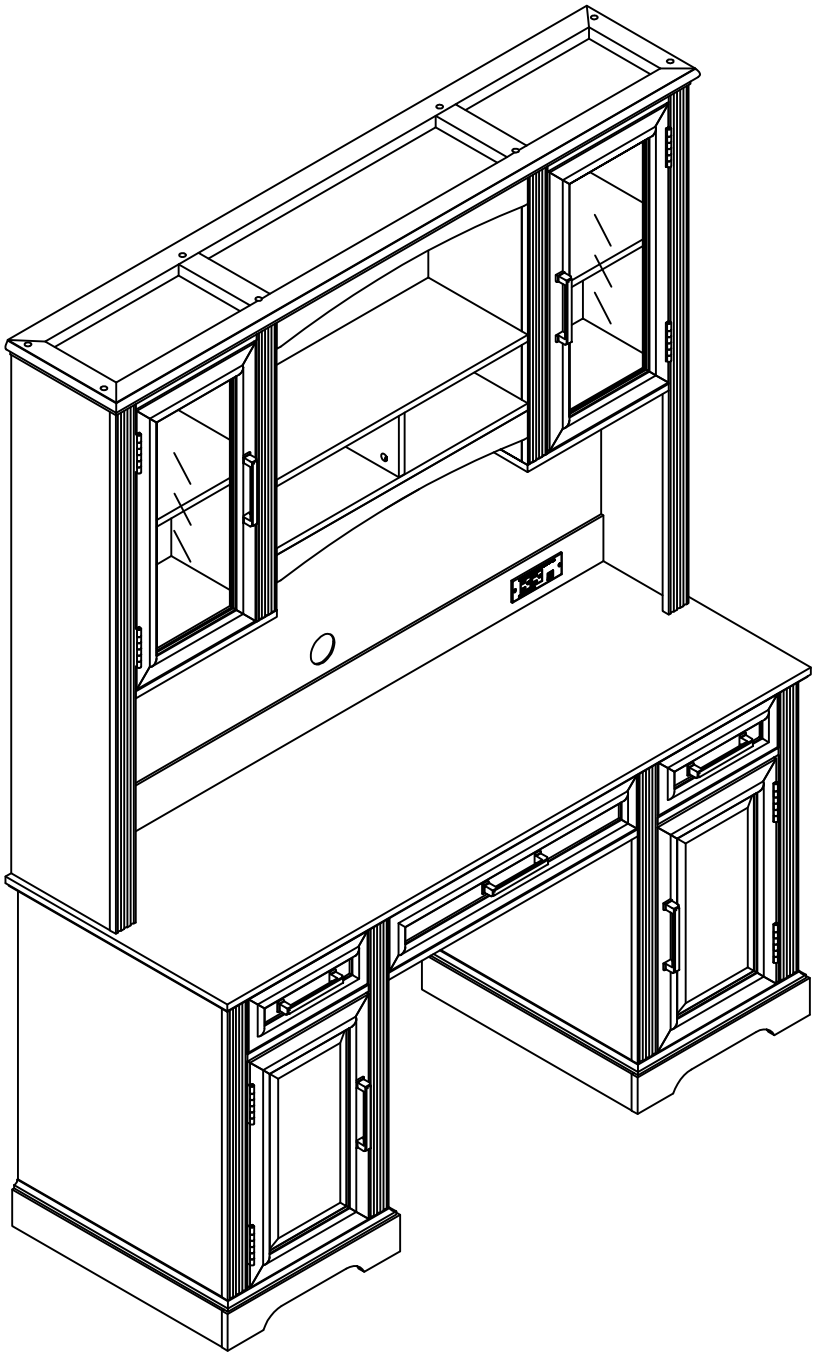
Step 67