INSTALLATION MANUAL

SFS1112

IMPORTANT NOTICE

⚠ Ensure the pipes are clear and flush or blow out debris before installation to prevent blockages.

- Please read this manual carefully before installation.
- Ensure all parts are included before starting the assembly.
- For replacement parts, please contact us using the contact information in the footer.

LIMITED LIFETIME WARRANTY

EVERSTEIN, a brand committed to the highest standards of quality and craftsmanship, provides a Limited Lifetime Warranty for its faucets. This warranty is applicable to the original purchaser and covers defects in material or manufacturing workmanship, proof of purchase will be required in the case of a claim.

For manufacture defects, EVERSTEIN will, at its option, (1) replace the defective part or product free of charge, (2) refund the original purchase price of the product (valid for 30 days from the date of delivery).

EVERSTEIN recommends installation by a licensed professional plumber. EVERSTEIN is not responsible for any damage or product failure caused by improper installation, misuse or failure to use a licensed professional.

WARRANTY COVERAGE EXCLUSIONS

This warranty does not cover defects or damage caused by the use of non-EVERSTEIN original parts. Furthermore, any damage resulting from faulty installation, product abuse, improper use, or the use of abrasive cleaners or solvents is not covered by this warranty. Labor charges and/or damage incurred during installation, repair, or replacement are also not the responsibility of EVERSTEIN.

LIMITATIONS OF LIABILITY

Except as required by law, this warranty replaces all other warranties, conditions, and guarantees, whether expressed or implied, statutory or otherwise, including but not limited to merchantability or suitability. In certain states, provinces, and countries, the exclusion or limitation of incidental or consequential damages may not apply.

RESPONSIBILITIES OF OTHERS

Inspecting the unit prior to installation is the responsibility of the installer or building contractor who acts on behalf of the user. They are responsible for ensuring the unit is free of defect or damage. In the event of a problem, the unit must not be installed. EVERSTEIN is not responsible for failures or damage that could have been discovered, repaired, or avoided by proper inspection and testing prior to installation.

Damage occurring in transit is the responsibility of the carrier. The user or installer MUST open the crate and inspect the unit for damage when it is delivered. If damage is discovered, it must be reported immediately to the EVERSTEIN and the carrier in writing.

WARRANTY SERVICE NOTE

When requesting warranty, be sure to have the following:
- Copy of original invoice
- Date of installation
- Description and pictures of defect
- Model number or description of model

To obtain warranty service and replacement part, please contact EVERSTEIN Customer Service Team. EVERSTEIN will determine whether to repair or replace your product, issue a refund.

CONTENT

1.Installation Instructions for basin faucet ---------- (1-4)

CONTENIDO

1.Instrucciones de instalación para el grifo de lavabo -------- (5-8)

Installation and maintenance matters

1.Check the accessories list to verify that all parts are complete in this package.

2.Do not disassemble the main body by yourself.

3.Connect inlet pipes to supply valves.

4.Make sure inlet pipes and supply valves have no impurities and are cleaned, with no impurities in the pipeline.

5.After installation, check all joints for leakages.

6.Do not leave the basin faucet exposed to a severely corrosive environment.

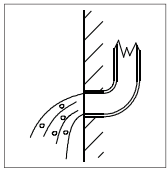

Do's

1.In order to keep the mixer surface bright, please clean the mixer regularly.

2.Rinse the faucet with clean water and wipe it with a soft cotton cloth.

3.Use one of the following cleaners to remove dirt from the surface:a.Mild liquid cleaner.b.Colorless glass cleaner and powder cleaner that do not cause abrasion and can be dissolved completely.c.Polish liquid that does not cause abrasion.

Don'ts

a.Avoid using cleaning powder, harsh cleaning chemicals, brushes and coarse cloth to prevent scratching and friction.

b.Do not use acid cleaners to clean the faucet as they may cause surface corrosion of the faucet. If the faucet is exposed to harmful acid substances, please rinse it immediately with water.

TOOLS NEEDED:

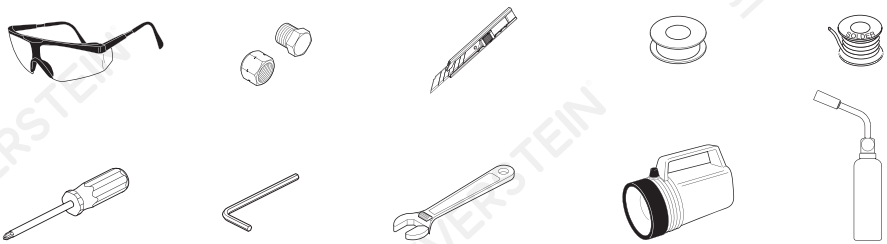

Basin Faucet Standard Part List

Accessories List

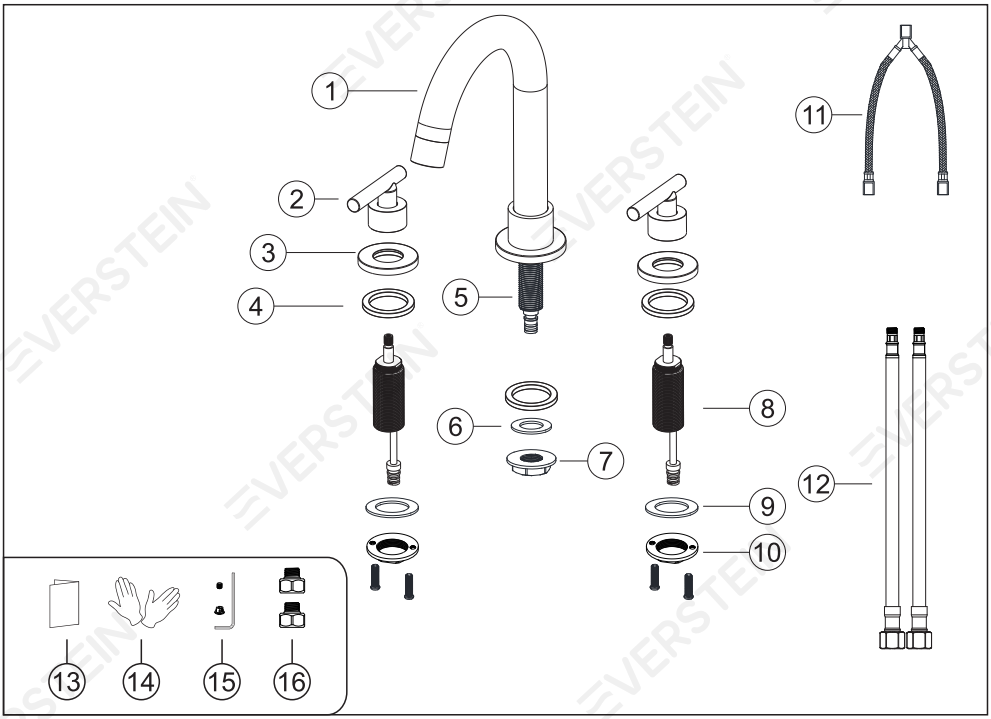

No.	Part name	Qty	No.	Part name	Qty
1	Faucet Body	1	9	Handle Gasket	2
2	Handle	2	10	Handle Nut	2
3	Handle Flange	2	11	Connect hose	1
4	O -shaped abrasion -resistant ring	3	12	Hot and Cold Hoses	1set
5	Brass Connector	1	13	Instruction manual	1
6	Faucet Body Gasket	1	14	Gloves	2
7	Faucet Body Nut	1	15	Handle parts	2set
8	Control Water Body	2	16	NPT 1/2 Adapter	2

Basin Faucet Installation

Step 1

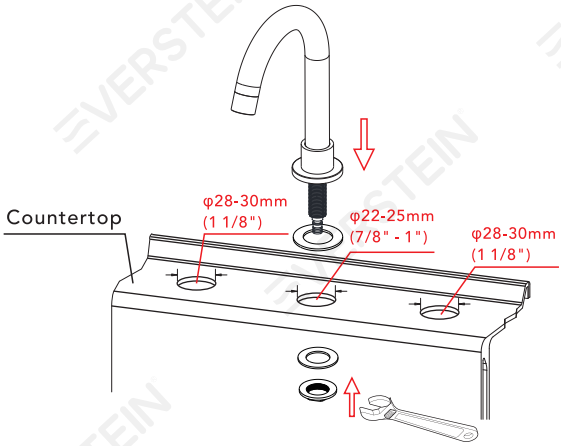

1. The countertop cutout dimensions are as shown in the diagram.
2. Faucet Body through the countertop. Install Faucet Body Gasket and Mounting Nut in sequence and tighten the nut with a wrench.

Step 2

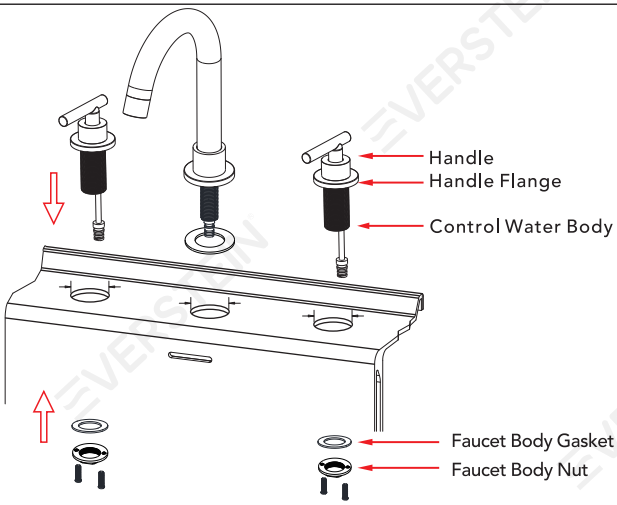

1. Separate the Control water body and Handle, place the Handle above the countertop and the Control water body below.
2. Connect the Handle, Flange, and O-shaped abrasion-resistant ring in sequence, then attach the Handle to the Control water body and tighten the screws.
3. Finally, use a screwdriver to tighten the Faucet Body Gasket and Nut.

◆ The connection of the inlet pipe and outlet pipe.

Step 3

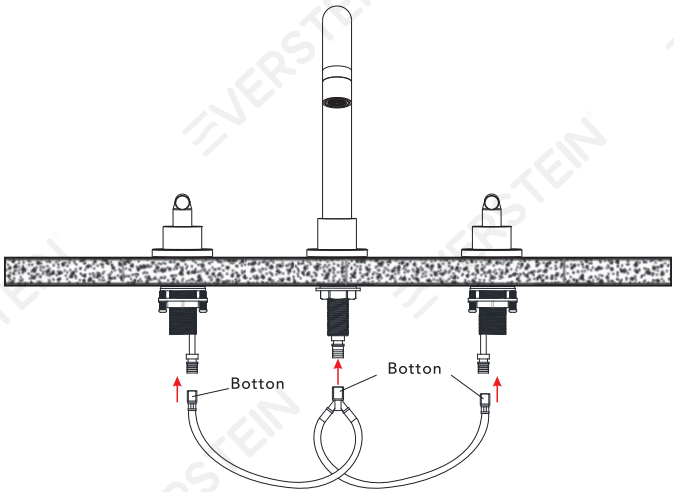

Press the button on one end of the Connect hose and connect the Connect hose to the corresponding position as shown in the diagram.(It is recommended to connect as shown in the diagram; otherwise, the water hose may bend, resulting in reduced water flow efficiency.)

Step 4

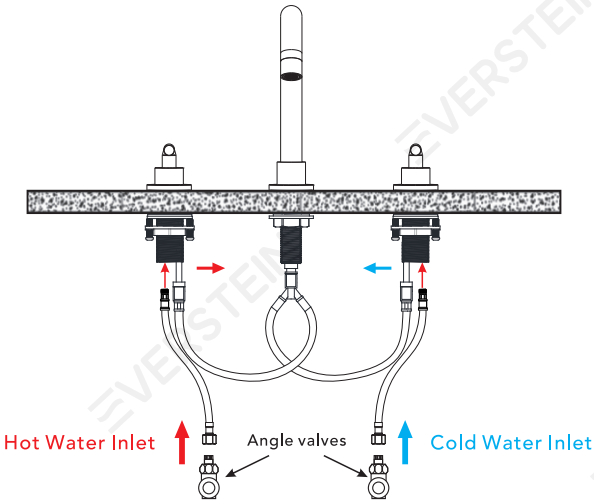

1. Connect one end of the hot and cold hoses to the control water body respectively (Note: Hot water on the left, cold water on the right).
2. Connect the other end of the hot and cold hoses to the corresponding angle valves controlling hot and cold water respectively.
3. Turn on the angle valves, open the handle to control the water flow, check if the water flows normally, and inspect for leaks at the connection points.

◆ Instalación y cuestiones de mantenimiento

1.Verifique la lista de accesorios para comprobar que todas las partes están completas en este paquete.
2.No desmonte el cuerpo principal por sí mismo.
3.Conecte las tuberías de entrada a las válvulas de suministro.
4.Asegúrese de que las tuberías de entrada y las válvulas de suministro no tengan impurezas y estén limpias, sin impurezas en la tubería.
5.Después de la instalación, verifique todas las uniones para detectar fugas.
6.No deje el grifo para lavabo expuesto a un entorno altamente corrosivo.

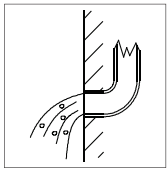

Hacer

1.En para mantener la superficie de la batidora brillante, limpie el mezclador regularmente.
2.inse el grifo con agua limpia y límpielo con un suave ropa de algodón.
3.Utilice uno de los siguientes limpiadores para eliminar la suciedad de la superficie: a. Limpiador líquido suave. b. Limpiador de vidrio incoloro y limpiador en polvo que no causen abrasión y que se puedan disolver completamente. c. Líquido pulidor que no cause abrasión.

No es decir

A.Valte con polvo de limpieza, productos químicos de limpieza duros, cepillos y tela gruesa para evitar rascar y fricción.
B. No use limpiadores de ácidos para limpiar el grifo, ya que pueden causar corrosión superficial del grifo. Si el grifo está expuesto a sustancias ácidas dañinas, enjuague inmediatamente con agua.

HERRAMIENTAS NECESARIAS:

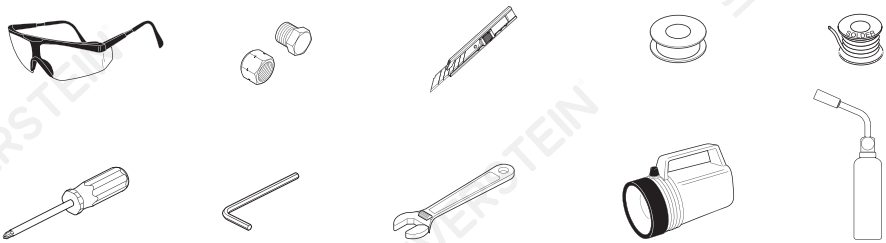

Lista de Partes Estándar del Grifo para Lavabo

Lista de accesorios

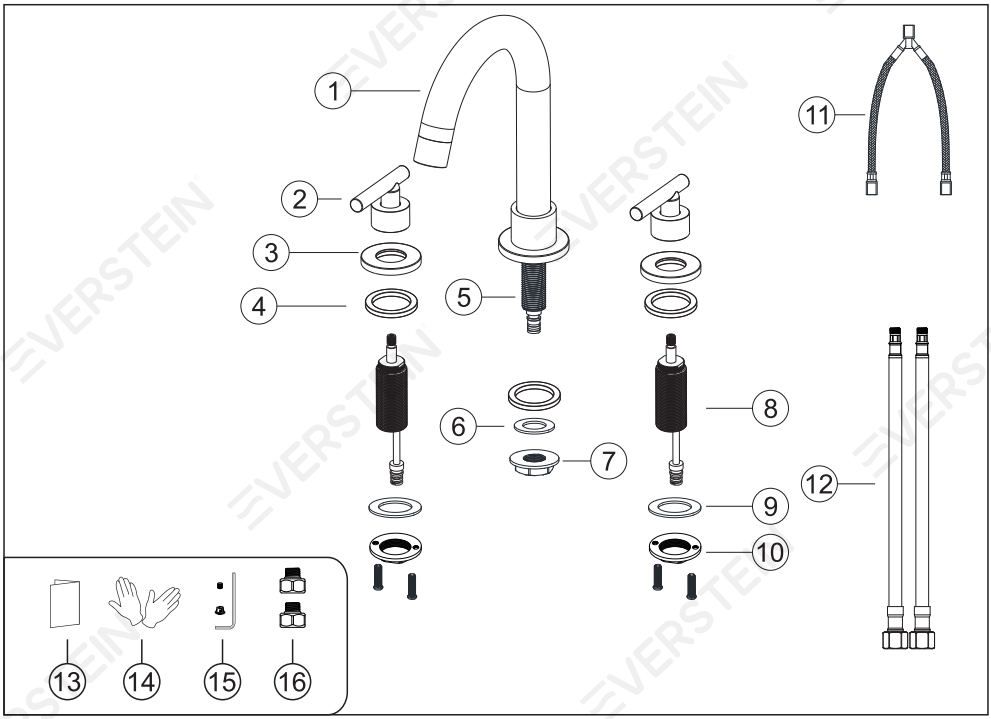

N.°	Nombre de la pieza	Cant	N.°	Nombre de la pieza	Cant
1	Cuerpo del Grifo	1	9	Empaque de la Manija	2
2	Manija	2	10	Tuerca de la Manija	2
3	Brida de la Manija	2	11	Manguera de Conexión	1
4	Anillo en forma de O resistente a la abrasión	3	12	Mangueras de Agua Caliente y Fría	1set
5	Conector de Latón	1	13	Manual de Instrucciones	1
6	Empaque del Cuerpo del Grifo	1	14	Guantes	2
7	Tuerca del Cuerpo del Grifo	1	15	Partes de la Manija	2set
8	Cuerpo de Control de Agua	2	16	Adaptador NPT 1/2	2

Instalación del Grifo para Lavabo

Paso 1

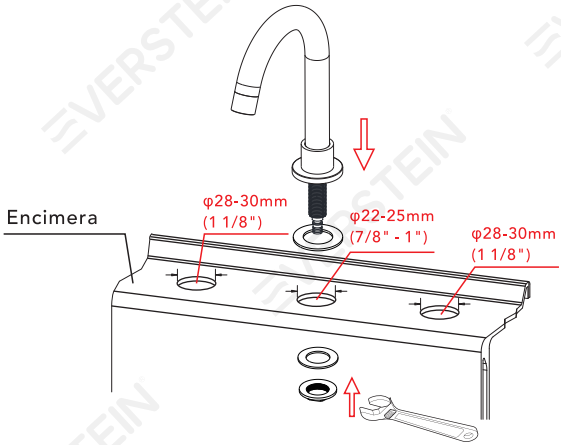

1. Las dimensiones del recorte de la encimera son como se muestra en el diagrama.
2. Pase el Cuerpo del Grifo a través de la encimera. Instale el Empaque del Cuerpo del Grifo y la Tuerca de Montaje en secuencia, y apriete la tuerca con una llave.

Paso 2

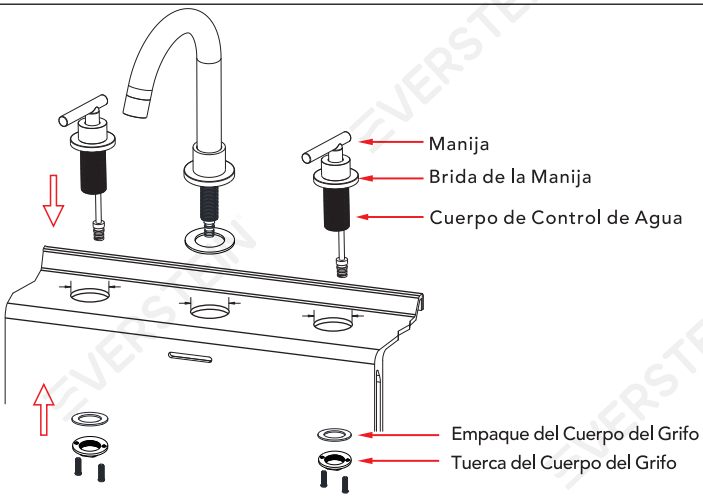

1. Separe el Cuerpo de Control de Agua y la Manija; coloque la Manija sobre la encimera y el Cuerpo de Control de Agua debajo.
2. Conecte la Manija, la Brida y el Anillo en forma de O resistente a la abrasión en secuencia, luego fije la Manija al Cuerpo de Control de Agua y apriete los tornillos.
3. Finalmente, use un destornillador para apretar el Empaque del Cuerpo del Grifo y la Tuerca.

◆ La conexión de la tubería de entrada y la tubería de salida.

Paso 3

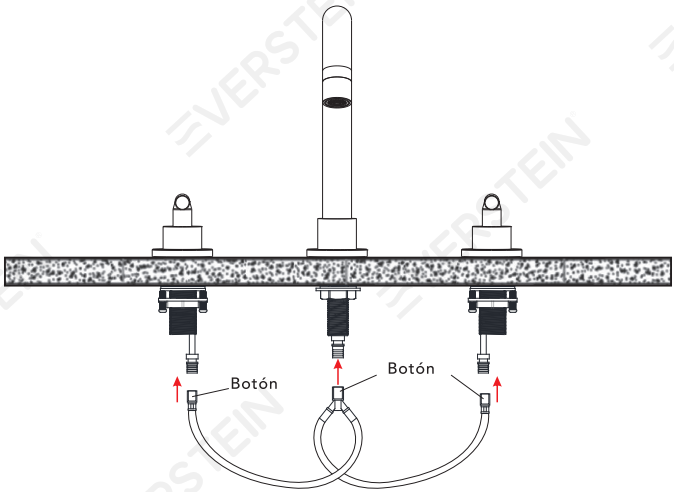

Presione el botón en un extremo de la manguera de conexión y conecte la manguera de conexión a la posición correspondiente, como se muestra en el diagrama. (Se recomienda conectar como se muestra en el diagrama; de lo contrario, la manguera de agua podría doblarse, lo que resultaría en una reducción de la eficiencia del flujo de agua).

Paso 4

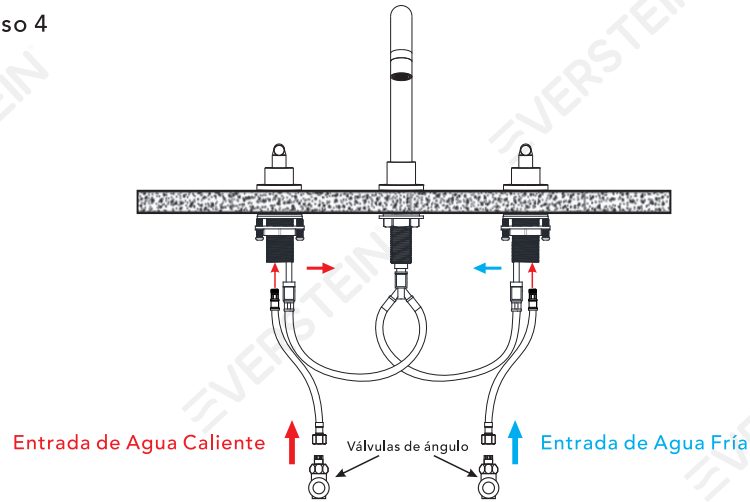

1. Conecte un extremo de las mangueras de agua caliente y fría al cuerpo de control de agua respectivamente (Nota: Agua caliente a la izquierda, agua fría a la derecha).
2. Conecte el otro extremo de las mangueras de agua caliente y fría a las válvulas de ángulo correspondientes que controlan el agua caliente y fría respectivamente.
3. Abra las válvulas de ángulo, gire la manija para controlar el flujo de agua, compruebe si el agua fluye normalmente e inspeccione si hay fugas en los puntos de conexión.