WARNING

Children have died from furniture tipover. To reduce the risk of furniture tipover:

- ALWAYS install anti-tip device provided.
- NEVER put a TV on this product.
- NEVER allow children to stand, climb, or hang on any drawers, doors, or shelves.
- NEVER open more than one drawer at a time.
- Place heaviest items in the lowest drawers.

/E CARE ABOUT YOUR SAFETY PLEASE READ

IMPORTANT SAFETY NOTICE
READ CAREFULLY BEFORE BEGINNING ASSEMBLY

- This unit contains small parts that present a choking hazard for children under 3 years of age. These parts are for adult assembly only and should be permanently affixed to the furniture. Any unused parts should be discarded properly.
  To make the assembly process easier, ask a friend to help you.
- ***2 people required***
- Always use proper tools.
- Carefully review the parts and hardware list.
- It is recommended that you assemble the unit on a protected surface or carpeted floor to avoid scratches.
- Follow assembly steps in order. DO NOT SKIP ANY STEPS.
- Periodically check to ensure that all connectors (bolts,screws, etc.) are tight.
- Keep the instructions for future reference.

WE WANT YOUR FURNITURE TO LAST PLEASE READ

CARE AND CLEANING INSTRUCTIONS

Congratulations on the purchase of your new product. Proper care and cleaning will extend the life of your purchase. To ensure your product maintains its finish and quality:

- Use a soft, clean cloth that will not scratch the surface when dusting
- Clean only with a slightly damp cloth
- Do not use chemical based products or solvents
- Liquid spills should be removed immediately
- Direct sunlight may fade or alter color of wood finishes

WE'RE HERE IF YOU NEED IT CONTACT US

CUSTOMER SERVICE
In order replacement parts, or if you have any difficulty assembling this unit refer to the front page of this manual for model and serial # information along with finding the needed part number(s) from the parts list. Then call our customer service line. Please do not return parts to the store.

HEADS UP

45 Minutes — **TIME**

PEOPLE NEEDED

Pro Tip: Choose wisely. Your safety depends on it.

LOW HIGH — **EFFORT SCALE** (you've got this)

ANTI-TIP KIT

BUST OUT

REQUIRED TOOL | **REQUIRED TOOL**

1. TOP (1)
2. LEFT SIDE (1)
3. RIGHT SIDE (1)
4. BOTTOM (1)
5. UNIT BACK (1)
6. DRAWER FRONT (5)
7. DRAWER LEFT SIDE (5)
8. DRAWER RIGHT SIDE (5)
9. DRAWER BACK (5)
10. DRAWER BOTTOM (5)
15. DRAWER SUPPORT (5)
17. BASESTRIP (1)
23. SUPPORT RAIL (1)
29. BALLAST PANEL (2)

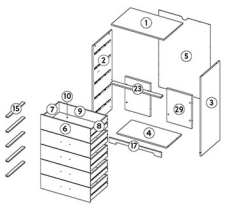

COMPONENTS

HARDWARE

Pro Tip: Tear this page out to reference hardware throughout the instructions.

A11 Tip Kit Pack

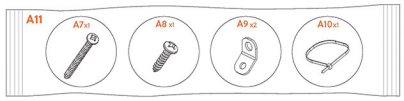

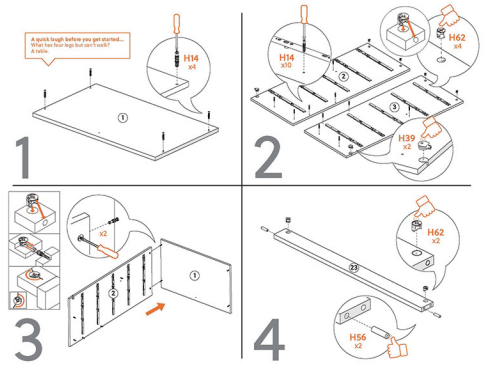

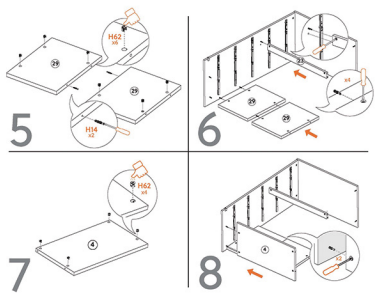

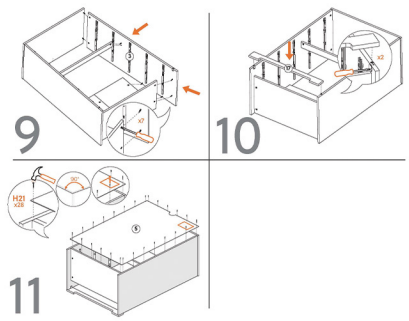

ANTI-TIP ANCHORING INSTALLATION

ANTI-TIP KIT

REQUIRED TOOL

Locate stud in wall. Attach bracket (A8) to wall using the long screw (A9). Attach second bracket (A9) to the sawtooth of the top (as shown in the diagram below). Then slide the insert tip (A10) through the holes of each bracket and slide into its end. Pull tight.

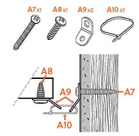

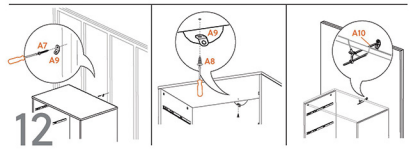

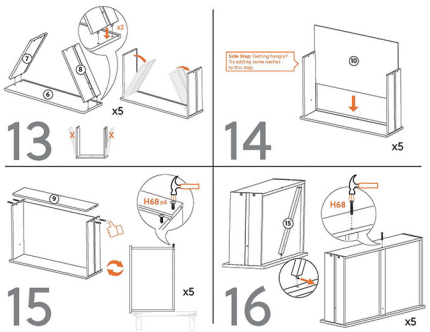

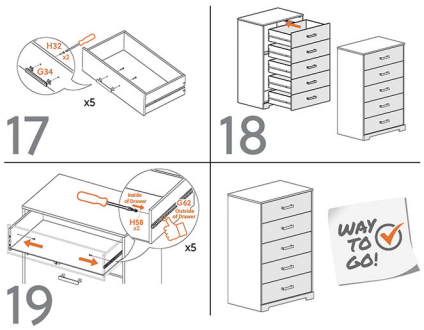

specified in the paragraph is Warrantor sole liability related to Unattached Cushions.

Any item repaired or replaced under these Limited Warranties will be covered by the Limited Warranties for the remainder of the original warranty period only.

All Products
These Limited Warranties do not apply to (i) rented, business, commercial, institutional, or governmental use, (ii) products purchased as a "floor model" or "demonstrator" or other display model, (iii) any merchandise purchased "as is" or seconds/irregs, (iv) any merchandise purchased at a distress sale or a going-out-of-business sale, (v) any merchandise purchased from a liquidator, or (vi) merchandise obtained from a rental retailer. All warranties, whether express or implied, cover only normal household usage. No warranty, express or implied, covers any product damaged by accidents, misuse, abuse, improper transportation damage, nor any condition resulting from incorrect or inadequate maintenance, cleaning or care. These Limited Warranties are null and void if furniture has been moved from original point of delivery to consumer.

Chemical Treatments
These Limited Warranties do not cover damages or defects caused by use of chemical treatments or protective sealings on the finish, leather, or upholstered fabric by the consumer. Any use of chemical treatments and any such chemical treatments or protective sealings voids all warranties of Warrantor.

Leather, Upholstered Fabric and Finishes
The Limited Warranties on "Leather", "Upholstered Fabric" and "Finishes and all Other Furniture Products" do no cover (i) damages resulting from excessive soiling, improper or unapproved cleaning methods, (ii) fading or other damages resulting from exposure to sunlight, (iii) damages resulting from household humidity, or (iv) damages resulting from pets, pests, or other non-human or non-household sources. Any use of improper or unapproved cleaning methods voids all warranties of Warrantor.

Modifications to Products
These Limited Warranties do not apply to any products that have been altered by any person, dealer, or company without the express written authorization of Warrantor.

Implied Warranties
IMPLIED WARRANTIES, INCLUDING ANY OF MERCHANTABILITY AND FITNESS FOR A PARTICULAR PURPOSE IMPOSED ON THE SALE OF THIS FURNITURE AND ITS PARTS UNDER STATE LAW, ARE LIMITED IN DURATION TO THE WARRANTY PERIOD SPECIFIED IN THESE LIMITED WARRANTIES. THIS WARRANTY PERIOD IS NOT ALLOWED LIMITATIONS ON HOW LONG AN IMPLIED WARRANTY LASTS, SO THE ABOVE LIMITATIONS MAY NOT APPLY TO YOU.

DISCLAIMER
NO OTHER EXPRESS WARRANTY HAS BEEN MADE OR WILL BE MADE ON BEHALF OF WARRANTOR WITH RESPECT TO THE FURNITURE AND ITS PARTS, OR THE OPERATION, REPAIR, OR REPLACEMENT OF THE FURNITURE AND ITS PARTS. FURTHERMORE, NO REPRESENTATIVE OF WARRANTOR OR ITS DISTRIBUTORS OR RETAILERS IS AUTHORIZED TO MAKE ANY CHANGES OR MODIFICATIONS TO THESE LIMITED WARRANTIES.
SOME RETAILERS OFFER EXTENDED OR ADDITIONAL WARRANTIES, INCLUDING BUT NOT LIMITED TO EXTENDED OR ADDITIONAL FABRIC WARRANTIES, EITHER FROM THE RETAILER OR THROUGH A THIRD-PARTY. WARRANTOR SHALL NOT BE LIABLE UNDER ANY EXTENDED OR ADDITIONAL WARRANTIES OFFERED BY ANY RETAILER OR THROUGH A THIRD-PARTY UNDER ANY CIRCUMSTANCES.
IN NO EVENT SHALL WARRANTOR BE RESPONSIBLE FOR CONSEQUENTIAL OR INCIDENTAL DAMAGES, SUCH AS LOSS OF USE, INCONVENIENCE, LOSS OR DAMAGE TO PERSONAL PROPERTY, WHETHER INDIRECT OR DIRECT, AND WHETHER WARRANTOR HAS BEEN ADVISED OF THE POSSIBILITY OF SUCH DAMAGES IN ADVANCE THAT SUCH DAMAGES WERE POSSIBLE. SOME STATES DO NOT ALLOW THE EXCLUSION OR LIMITATION OF INCIDENTAL OR CONSEQUENTIAL DAMAGES, SO THE FORGOING LIMITATION OR EXCLUSION MAY NOT APPLY TO YOU.
IN NO EVENT SHALL WARRANTOR'S RESPONSIBILITY EXCEED THE PURCHASE PRICE OF THE PRODUCT OR ITS REPLACEMENT.
This warranty gives you specific legal rights, and you may also have other rights that vary from state to state.

CAUTION
Some furniture (recliners, sleeper sofa, etc.) has many moving parts. Caution must be used in operation (opening, closing, etc.). Children should not be allowed to play on or operate motion furniture. Always leave recliners in an upright position and keep hands and feet clear of mechanism. Only the occupant should operate it.

CLAIM PROCEDURE
To obtain warranty service, the original retail purchaser must comply with the following Claim Procedure:
Contact the Signature Design-authorized retailer from whom you purchased your furniture, to obtain warranty service. All claims must include the original bill of sale, the product serial number, and be filed within the applicable warranty period. Warrantor reserves the right to require defective parts be returned upon request. You must make reasonable arrangements for the shipment of defective parts or furniture or for parts from your home to the retailer or from the retailer to your home. If the retailer from which you purchased the furniture has closed and you need service, contact writing or call our Customer Service.

Warranty Information

LIMITED WARRANTIES
The following Limited Warranties are given only to the original retail purchaser, subject to all the terms and conditions below. Tl subject to all the limitations and exclusions described in these Limited Warranties, warrants the following products and parts against material manufacturing defects for the duration set forth next to that product or part in the table below:

All warranty periods commence on the date of delivery of the product.

Product Part	Limited Warranty Duration	Labor Coverage
Frames Used in Upholstered & Leather Products	Limited Lifetime Warranty*	1 Year
Springs The metal spring systems are generally, sinuous, wire seat springs, and, where applicable, back springs.	5 Year Limited Warranty	1 Year
Recliner Mechanisms	5 Year Limited Warranty	1 Year
Sleeper Mechanisms	3 Year Limited Warranty	1 Year
Unattached Cushioning** Unattached Cushion means each cushion core in a unattached (loose) seat cushion.	1 Year Limited Warranty	1 Year
Attached Cushioning** Attached Cushion means each cushion core in a seat cushion which is attached to the product.	1 Year Limited Warranty	1 Year
Leather and Upholstery Fabric***	1 Year Limited Warranty	1 Year
Top of Bed Top of Bed means comforters, bed skirts, pillow shams, and any accent pillows included with a comforter set.	30 Days	30 Days
Finishes and all Other Furniture Products Finishes and all other Furniture Products means all finishes and other parts, components, and other furniture products not specifically covered by the above Limited Warranties, including but not limited to dining room tables, chairs, occasional tables, beds, dressers, sleeper mattresses, marble tops, granite tops, desks, curio cabinets, china cabinets, buffets, entertainment centers, bar units, wall units, bookcases, chests, and any leather pull cords and handles incorporated into any furniture product.	1 Year Limited Warranty	1 Year

*As used in these Limited Warranties, "lifetime" means the normal useful life of the product under reasonable use.

**All seat cushion cores in both Unattached Cushioning and Attached Cushioning will soften with normal use and will conform to the shape of the user. This shall be considered normal wear, and shall not be considered a loss of resiliency or a material manufacturing defect.

***The Leather and Upholstery Fabric Limited Warranty also includes seam slippage, cracking, and dye transfers. Leather is a natural product, and, as such, each hide will reflect its own individuality. Some variations of shade and tone are to be expected, as are nicks, scratches, and wrinkles that only occur in genuine leather; these characteristics are in no way to be considered a defect. These Limited Warranties do not cover tears, flattening of nap, pilling, fading, or shrinking and is not valid when heavy soiling or abuse is evident. These Limited Warranties also do not cover protective finishes, velvets, velvet types, since by their very nature, these fabrics are of soft texture and will crush, shade and mark more readily than most fabrics, these characteristics are in no way to be considered a defect.

LIMITATIONS AND EXCEPTIONS
The following limitations and exceptions apply to the Limited Warranties:

Remedy
Under these Limited Warranties, for all of its products other than an Unattached Cushion (as defined in the topical heading "Unattached Cushioning"), the sole liability of Warrantor is limited to repair, or at its option, replacement the applicable product or part not in conformity with these Limited Warranties. REFUNDS ARE NOT AVAILABLE. If within the warranty period, identical materials are unavailable at the time of repair or replacement, Warrantor reserves the right to substitute materials of equal or better quality. Replacement fabrics may vary in color from the original due to dye lot differences.
In addition, during the period of any applicable Labor Coverage, Warrantor will pay, within one year from the date of delivery, reasonable and customary labor rates to repair or replace the defective parts (at Warrantor's option) and shipping costs from the retailer to and from Warrantor, at no charge to the original retail purchaser. After the expiration of the Labor Coverage or for all products or parts not covered by Labor Coverage, the original retail purchaser will be responsible for labor, packing, and all shipping and transportation costs. The costs associated with transporting the furniture or parts from your home to the retailer or from the retailer to your home are excluded from all Limited Warranties.

For Unattached Cushions with a material manufacturing defect, Warrantor will replace the defective Unattached Cushion provided that the original retail purchaser during the warranty period (i) complies with the Claim Procedure set forth in these Limited Warranties and (ii) if requested by Warrantor, returns the defective cushion core contained within an Unattached Cushion to Signature Design, Attn: Director of Quality, One Ashley Way, Arcadia, WI 54612. The remedy