End Table

Assembly Instructions -Please keep for future reference

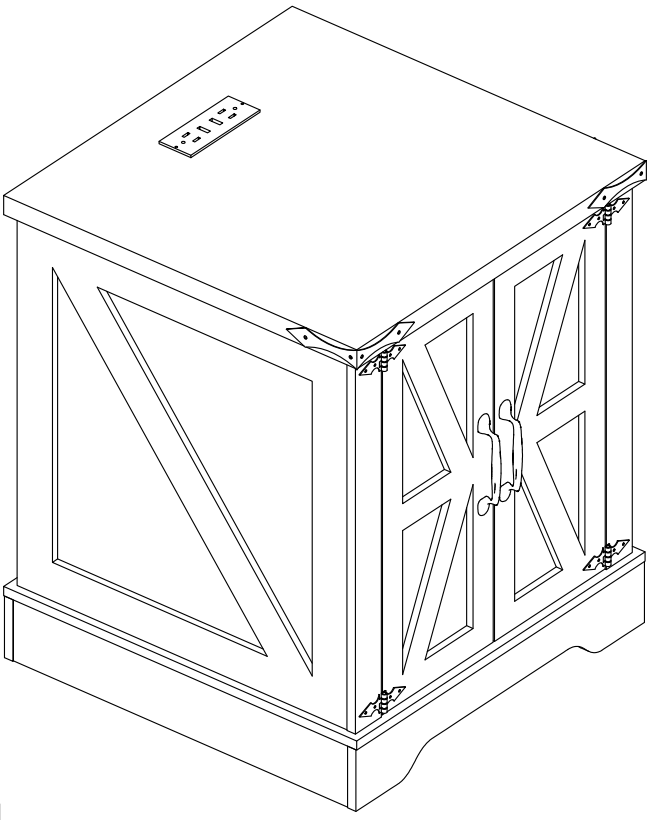

Dimensions

Width-19.7 inch
Depth-19.7 inch
Height-23.6 inch

Important -Please read these instructions fully before starting assembly

Components -Fittings

Please check you have all the panels listed below

Note:The quantitie below are the correcet amount to complete the assembly.In some cases more fittings may be supplied than are required.

Ⓐ A1 A2 Cam Bolt and lock x 30	Ⓑ Dowel x 21	Ⓒ 5*40mm Screw x 6	Ⓓ 3.5*12mm Screw x 6
Ⓔ Sticker Cover x 14	Ⓕ Hinge x 4	Ⓖ Handle x 2	Ⓗ 4*19mm Screw x 4
Ⓘ 2AC2USB Power Strip x 1	Ⓙ J1 J2 J3 J5 J4 Anti -tipping device x 1	Ⓚ Movable partition bracket x 4	Ⓛ Angle Iron x 2
Ⓜ M1 M2 Magnet x 1	Ⓝ 3.5*12mm Screw x 26		

Tools required

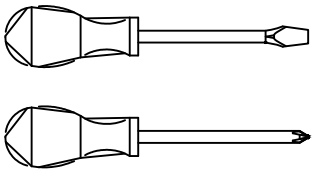

Phillips screwdriver
(medium &large)

Safety and Care Advice

Important – Please read these instructions fully before starting assembly

• Check you have all the components and tools listed on the following pages.

• Remove all fittings from the plastic bags and separate them into their groups.

• Keep children and animals away from the work area, small parts could choke if swallowed.

• Make sure you have enough space to layout the parts before starting.

• During assembly do not stand or put weight on the product, this could cause damage.

• Assemble the item as close to its final position (in the same room) as possible.

• Assemble on a soft level surface to avoid damaging the unit or your floor.

• Parts of the assembly will be easier with 2 people.

• To reduce the likelihood of damaging your product please ensure that your power drill is set on a low torque setting.

Care and maintenance

• Only clean using a damp cloth and mild detergent, do no use bleach or abrasive cleaners.

• From time to time check that there are no loose screws on this unit.

• This product should not be discarded with household waste. Take to your local authority waste disposal centre.

Handy Hints

• Assemble all parts and bolts loosely during assembly, only once the product is complete should you fully tighten the bolts

• Regularly check and ensure That all bolts and fittings are tightend properly.

WARNING
In order to help prevent overturning – please follow these instructions

To help prevent product toppling over please follow the below steps:-

Use the anti tip stap or wall fixing method provided (if applicable)
Do not allow children to climb or hang on the furniture
Do not open more than one drawer at a time
Do not place heavy items in the top drawers
Do not place heavy items on top of the furniture, unless the furniture has been designed for this purpose

Using Camlocks

Step 1

Connect the male camlock as diected in the assembly instructions using a scewdriver.

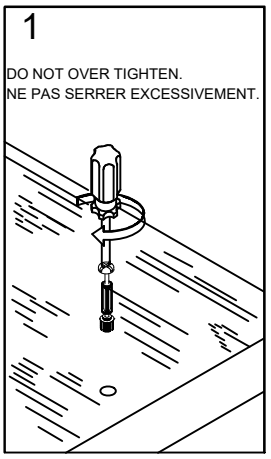

Step 2

Push the male camlock into the entry hole.

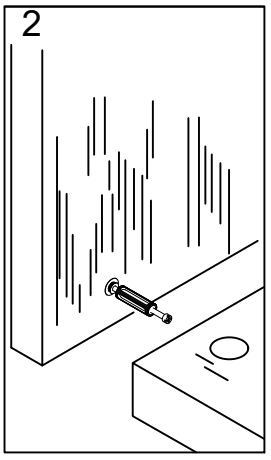

Step 3

Insert the female camlock as shown in the instruction.

Note：ensure that the arrow on the top of the camlock points towards the entry hole for the male camlock.

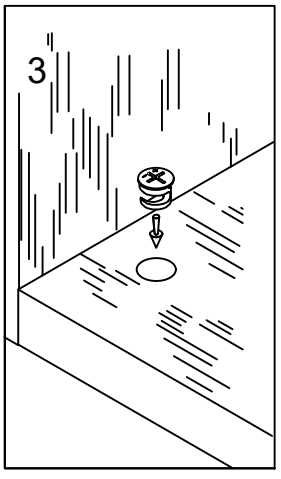

Step 4

Turn the female camlock clockwise with a screwdriver.

You should feel a click when the camlock is locked in place.

The joint is now secure.

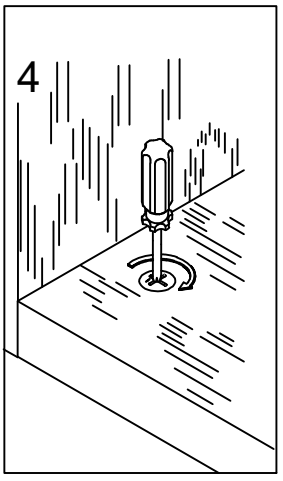

Assembly Instructions

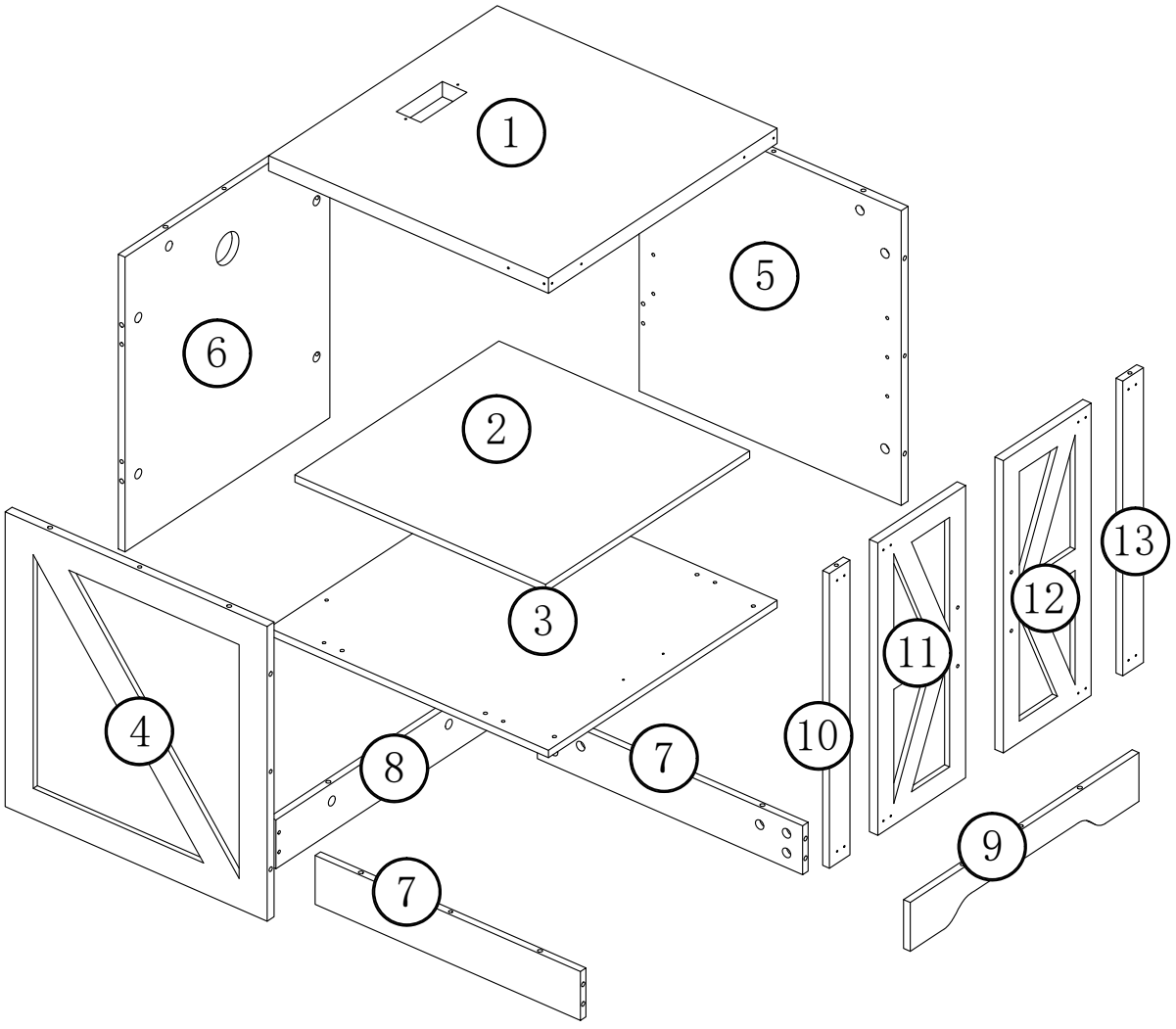

There is 1 box of this product.

N721P192132

1 500*500mm 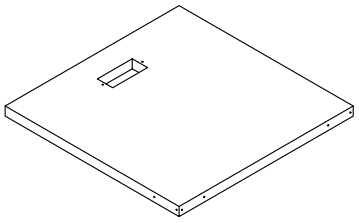 1PC	2 446*448mm 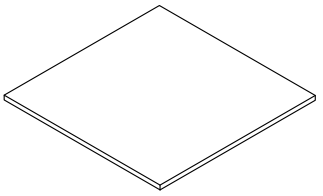 1PC	3 500*500mm 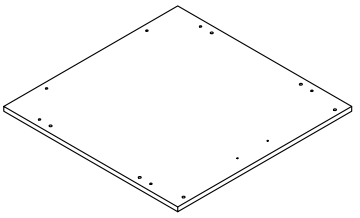 1PC
4 483*468mm 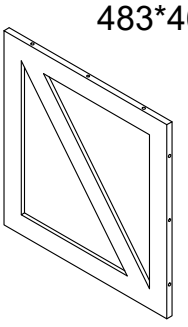 1PC	5 483*468mm 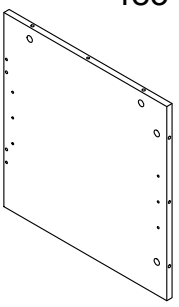 1PC	6 483*448mm 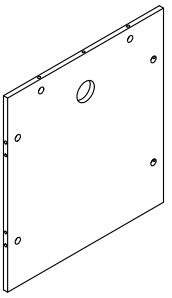 1PC
7 474*80mm 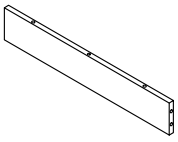 2PCS	8 500*80mm 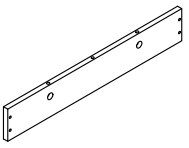 1PC	9 500*80mm 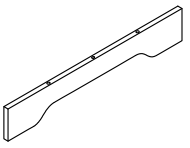 1PC
10 483*45mm 1PC	11 479*187mm 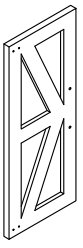 1PC	12 479*187mm 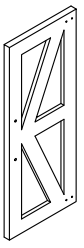 1PC
13 483*45mm 1PC		

Assembly Instructions

Step 1

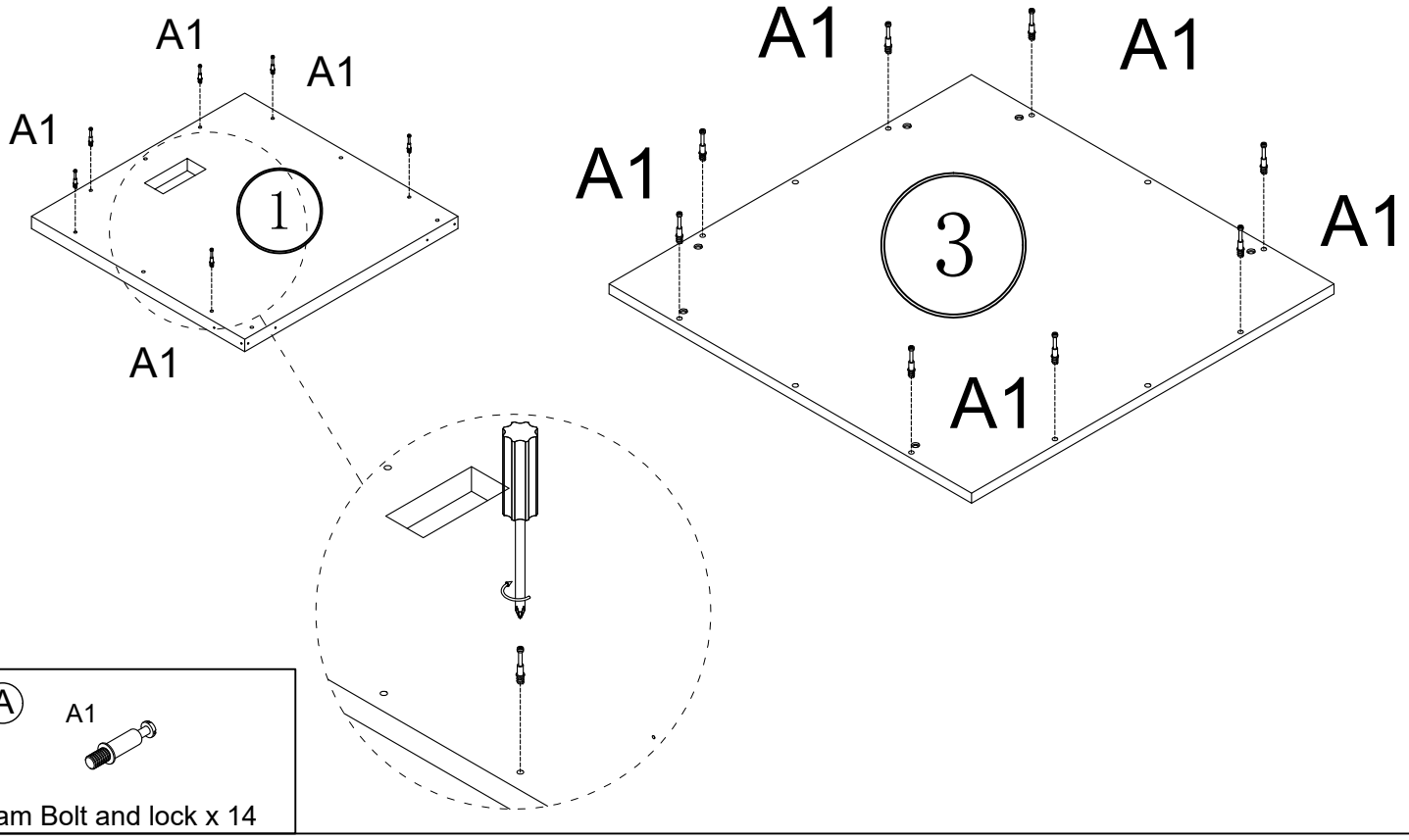

Ⓐ A1

Cam Bolt and lock x 14

Step 2

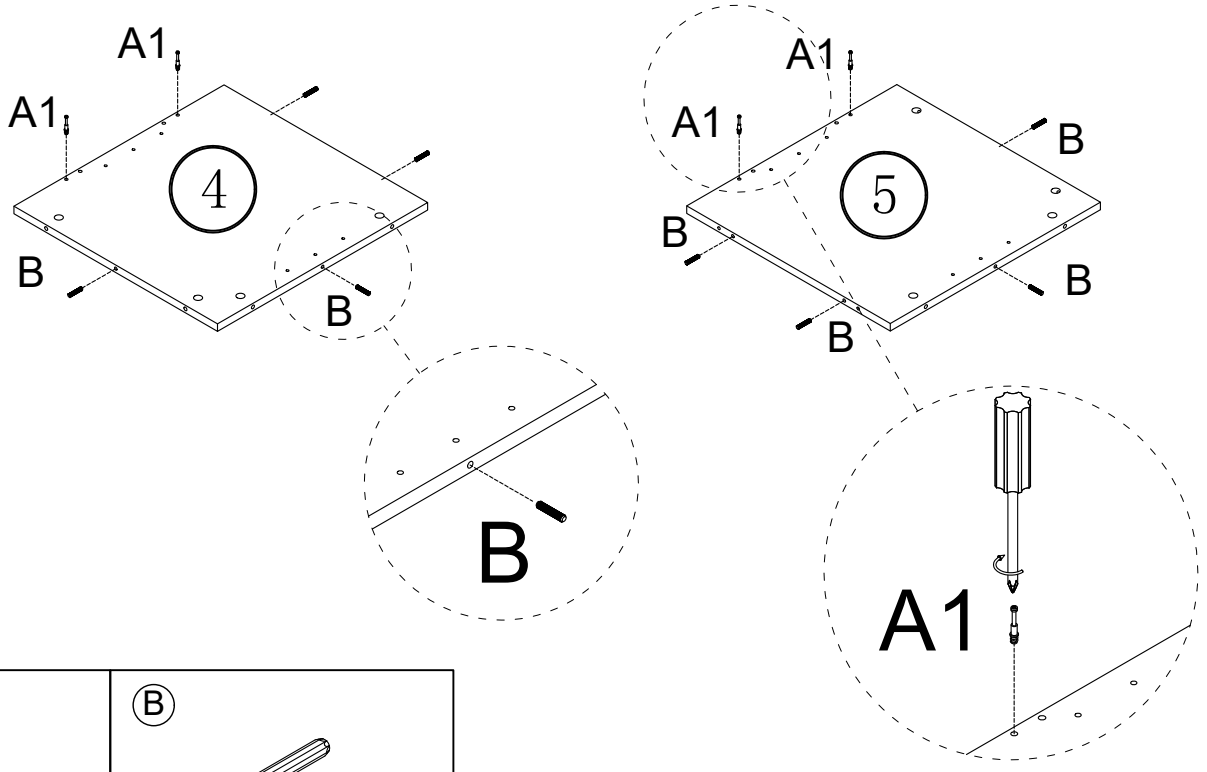

Ⓐ A1

Cam Bolt and lock x 4

Ⓑ

Dowel x 8

Assembly Instructions

Step 3

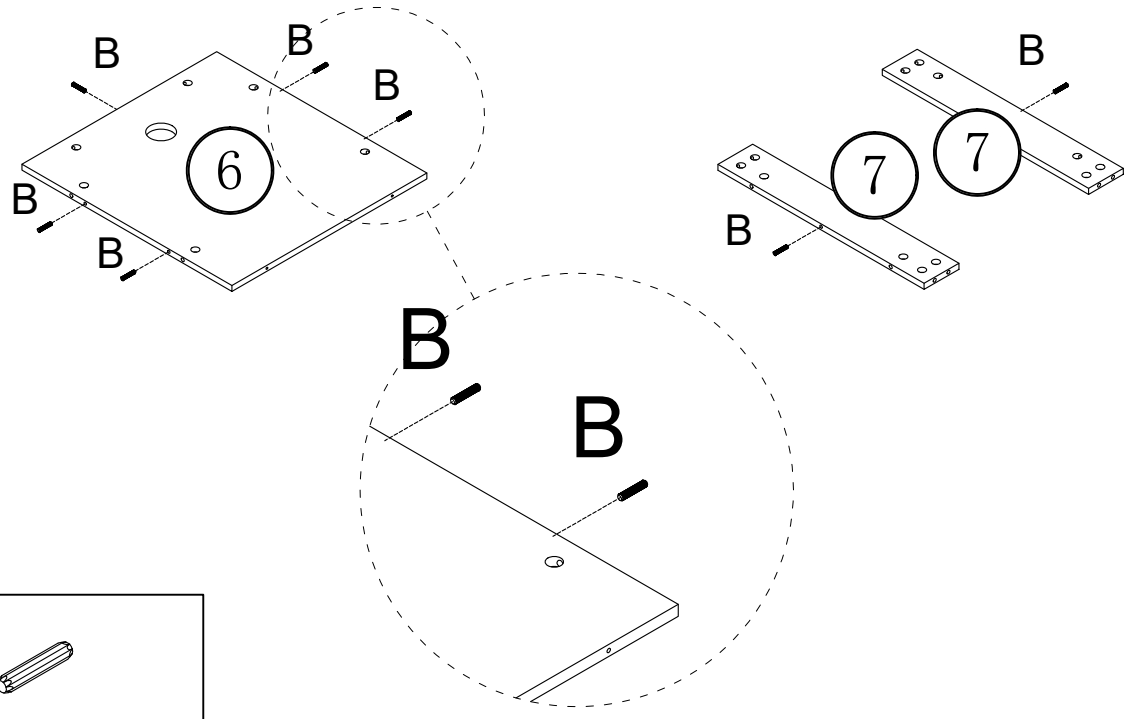

Ⓑ

Dowel x 7

Step 4

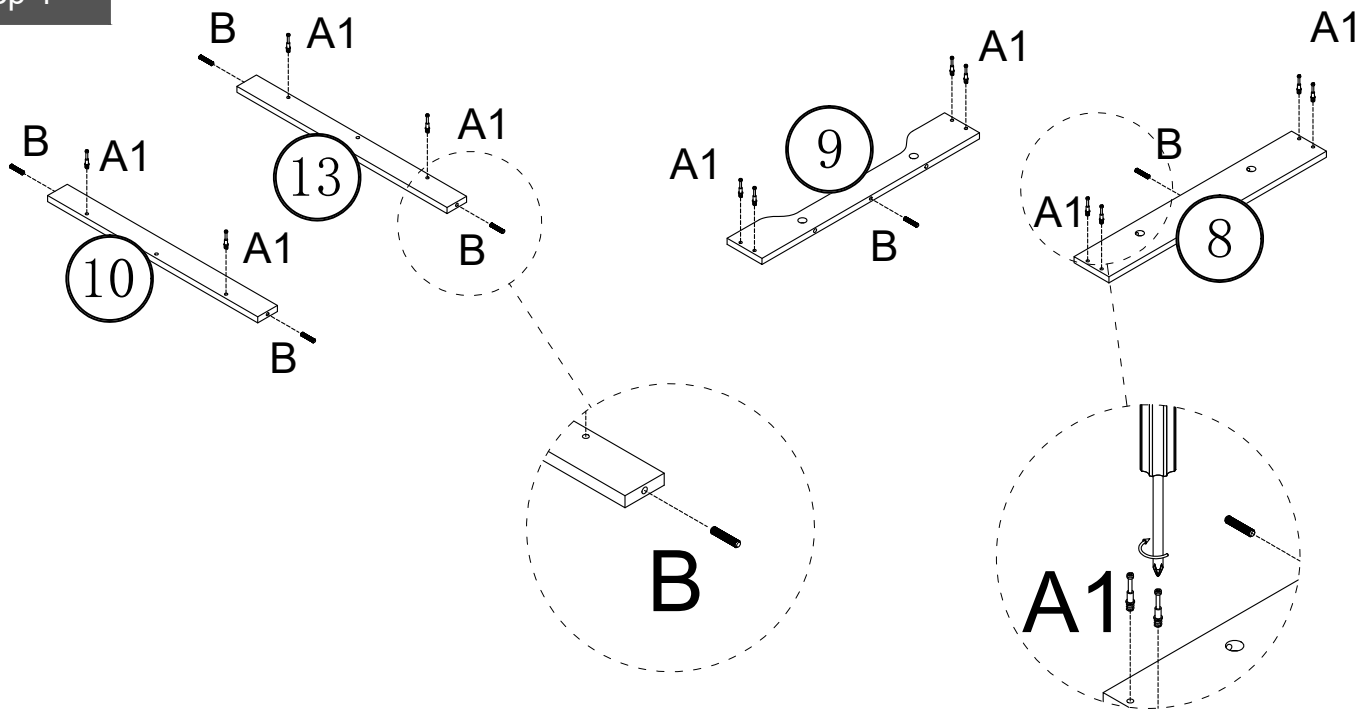

Ⓐ

Cam Bolt and lock x 12

Ⓑ

Dowel x 6

Assembly Instructions

Step 5

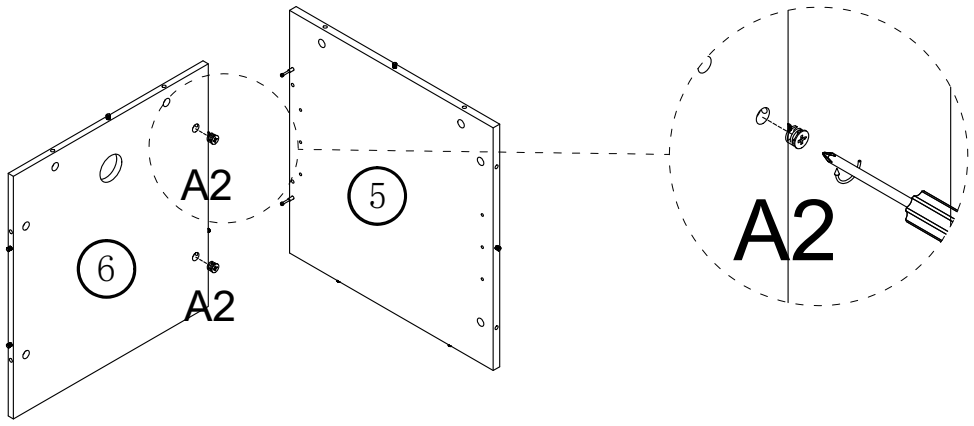

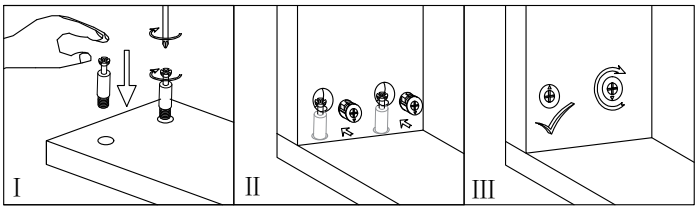

Ⓐ A2

Cam Bolt and lock x 2

Step 6

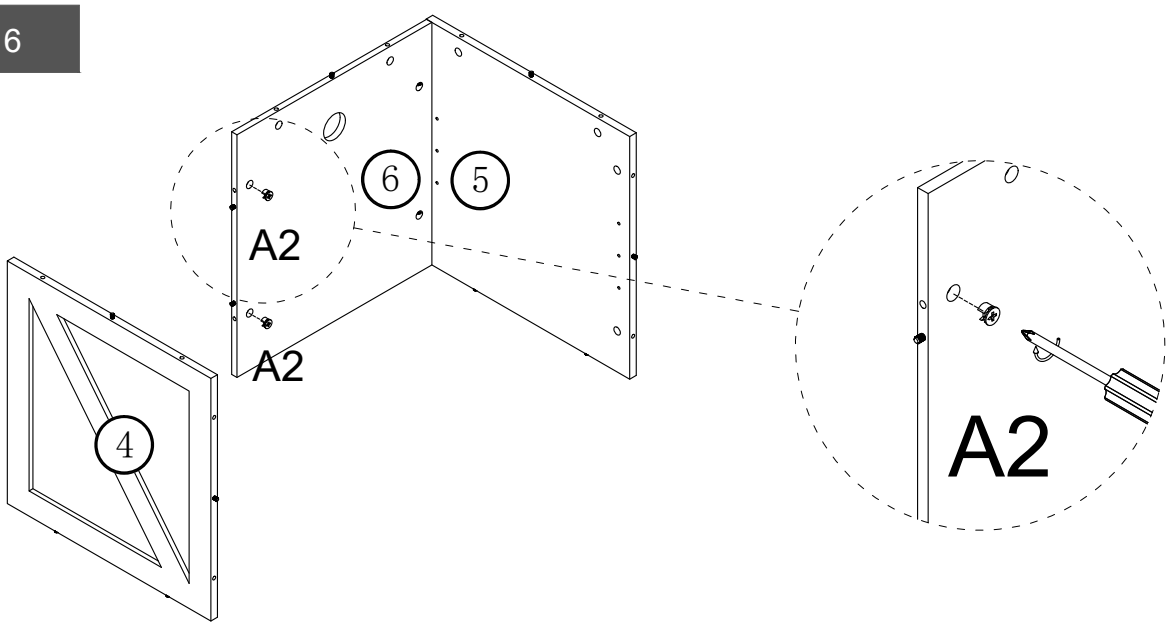

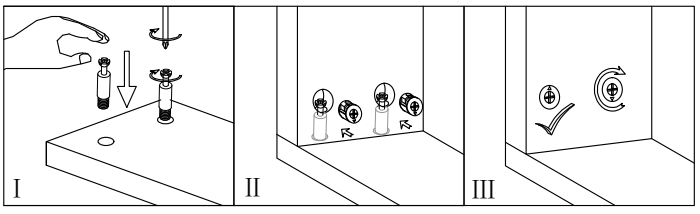

Ⓐ A2

Cam Bolt and lock x 2

Assembly Instructions

Step 7

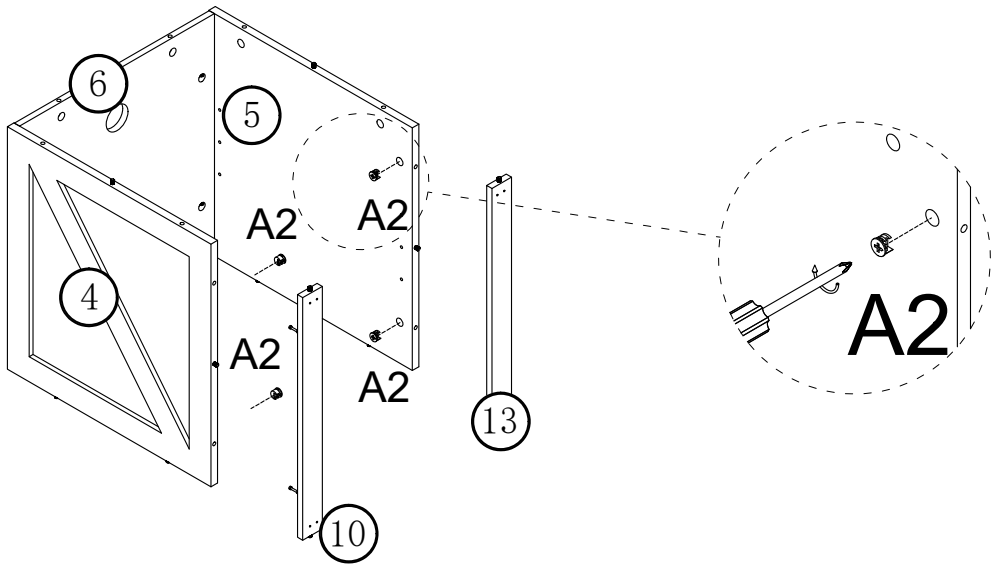

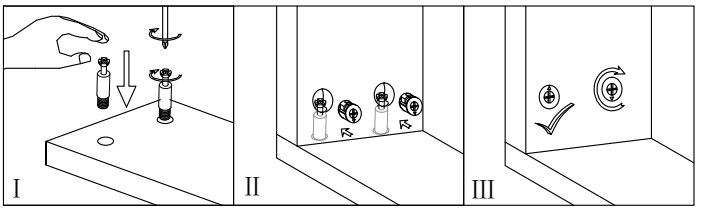

A
A2
Cam Bolt and lock x 4

Step 8

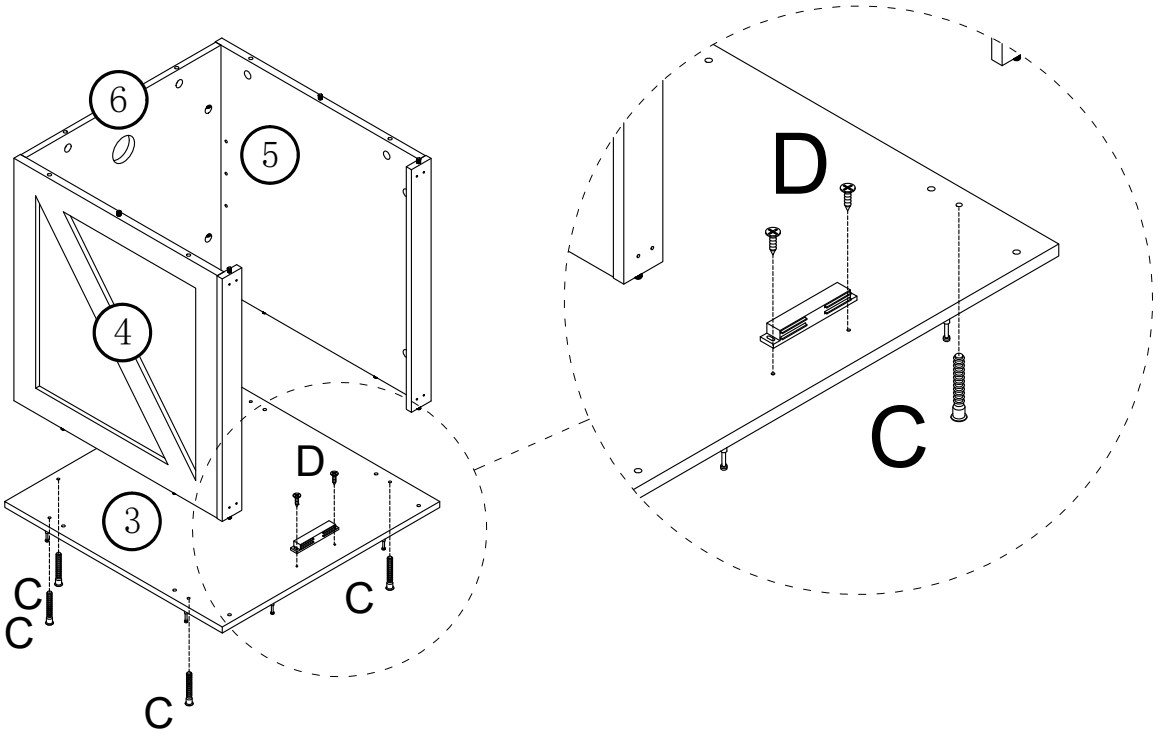

C	D	M1
5*40mm Screw x 6	3.5*12mm Screw x 2	Magnet x 1

Assembly Instructions

Step 9

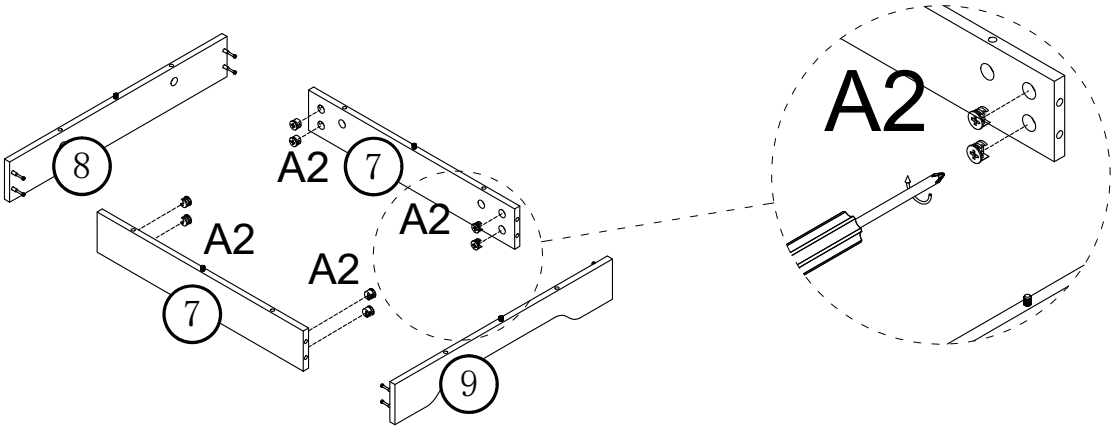

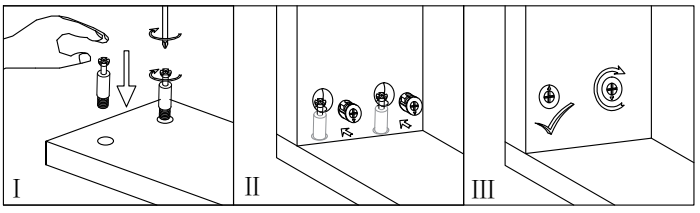

Ⓐ A2

Cam Bolt and lock x 8

Step 10

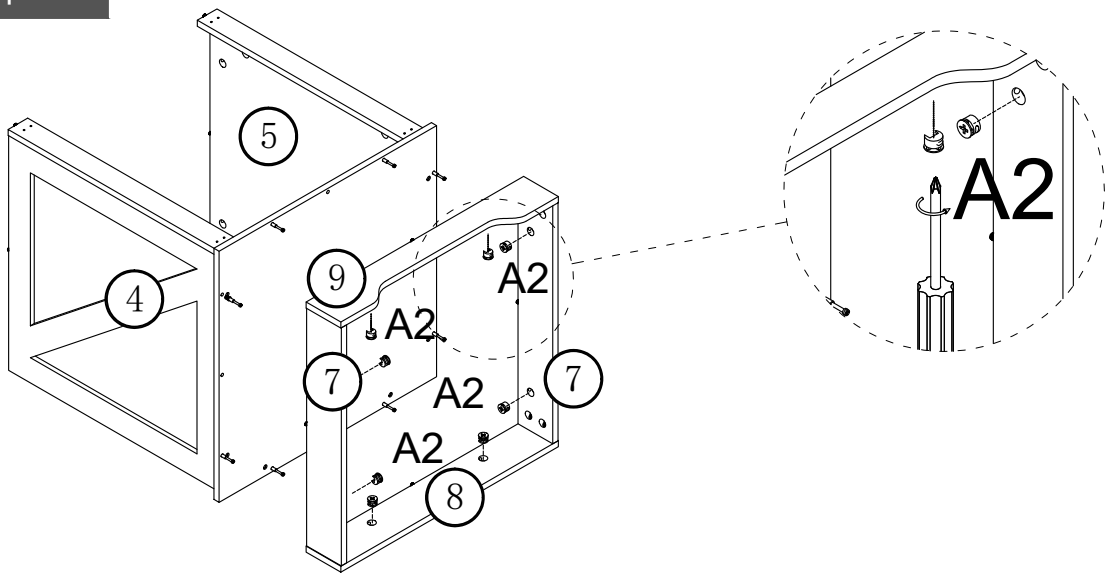

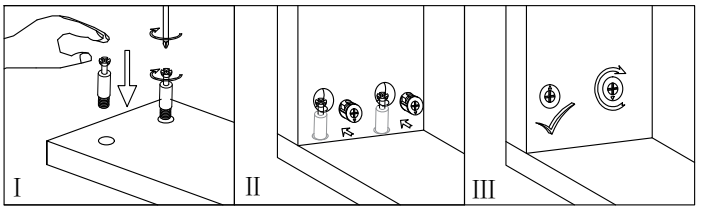

Ⓐ A2

Cam Bolt and lock x 8

Assembly Instructions

Step 11

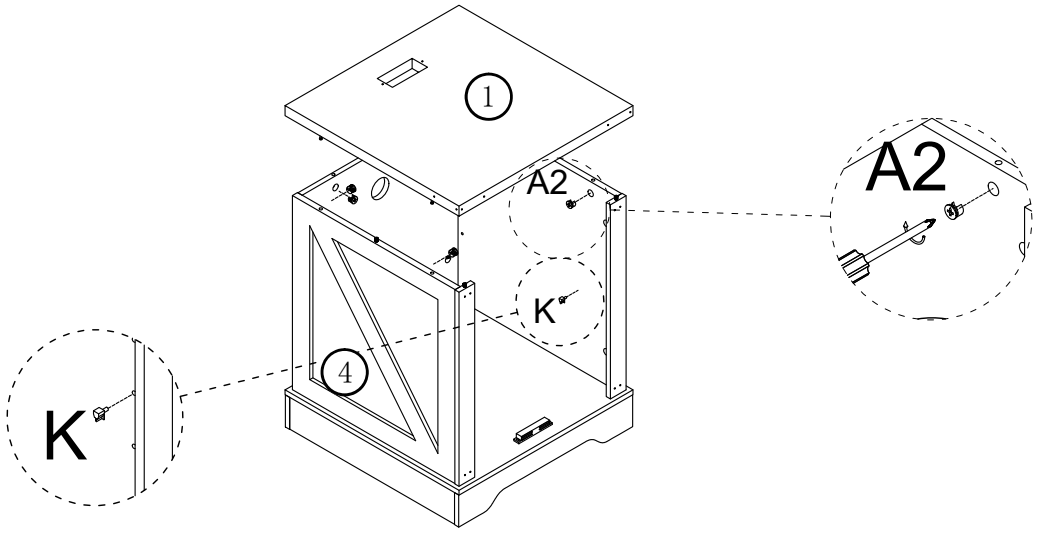

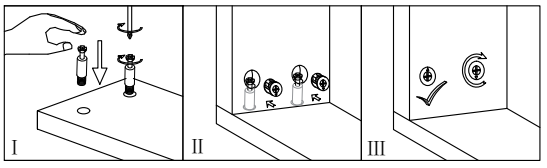

Ⓐ A2 Cam Bolt and lock x 6	Ⓚ Movable partition bracket x 4

Step 12

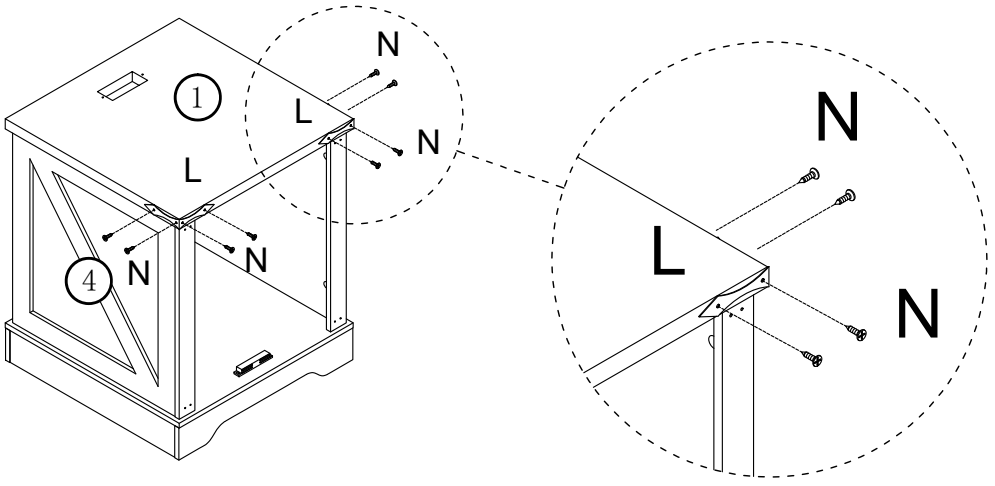

Ⓛ Angle Iron x 2	Ⓝ 3.5*12mm Screw x 8

Assembly Instructions

Step 13

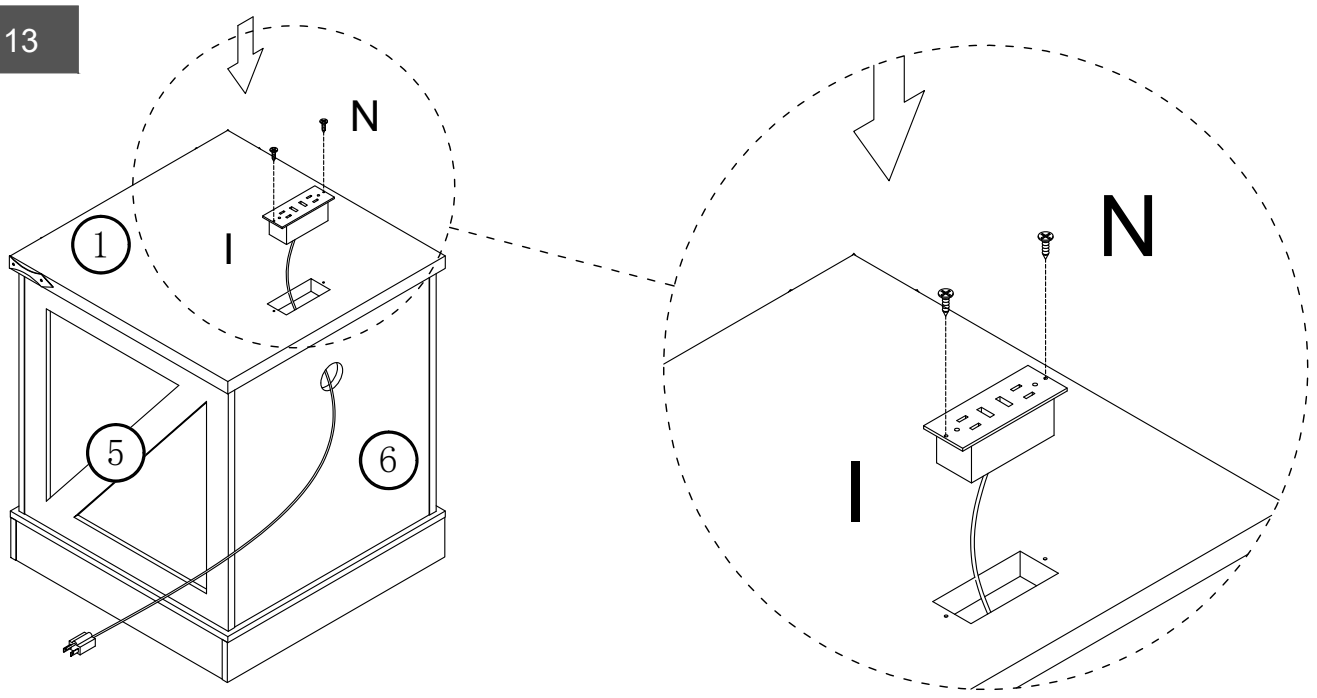

N	I
	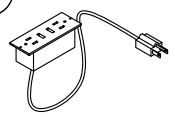
3.5*12mm Screw x 2	2AC2USB Power Strip x 1

Step 14

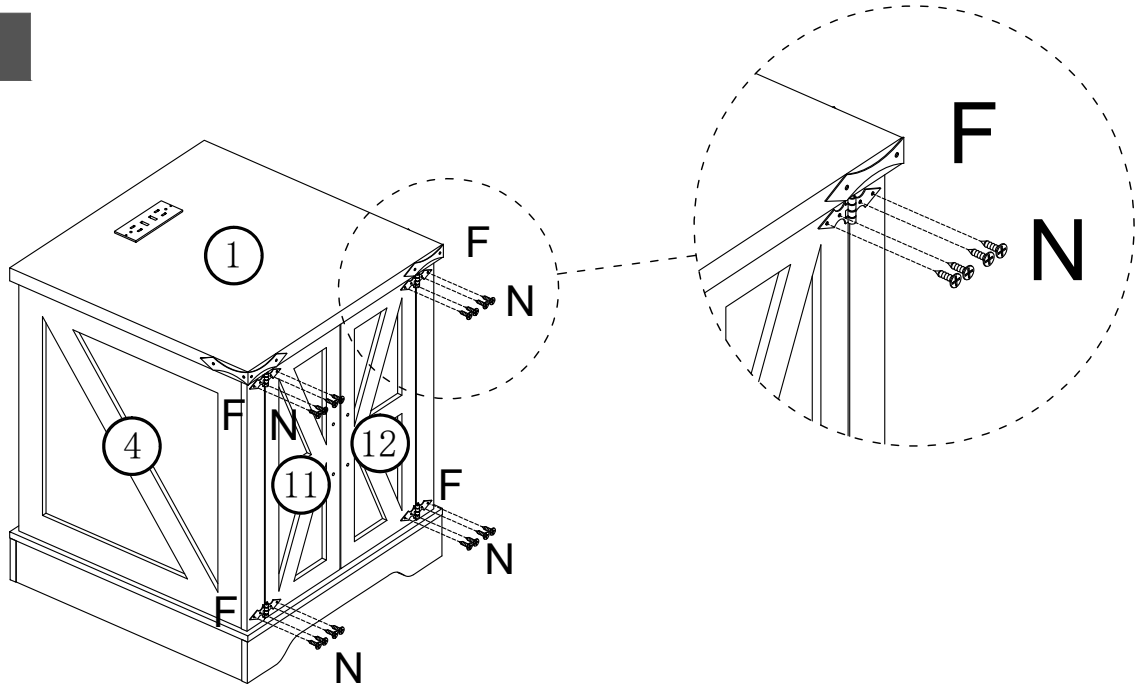

F	N
Hinge x 4	3.5*12mm Screw x 16

Assembly Instructions

Step 15

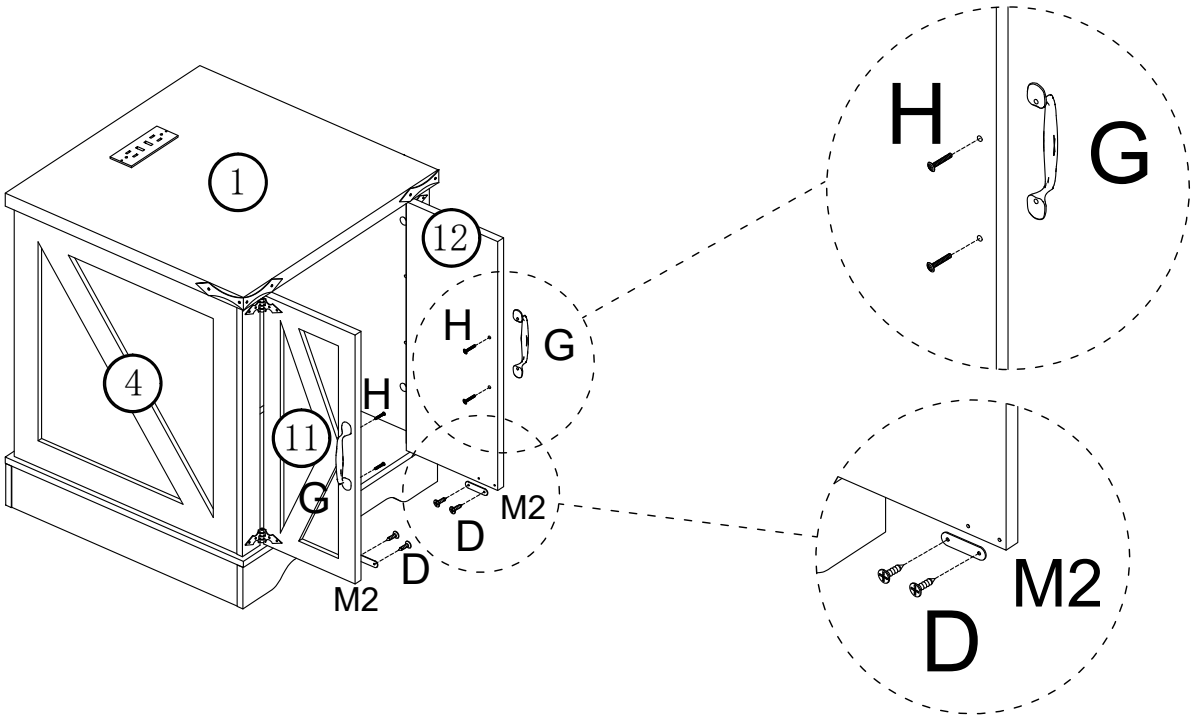

G	H	D	M2
Handle x 2	4*19mm Screw x 4	3.5*12mm Screw x 4	Magnet x 1

Step 16

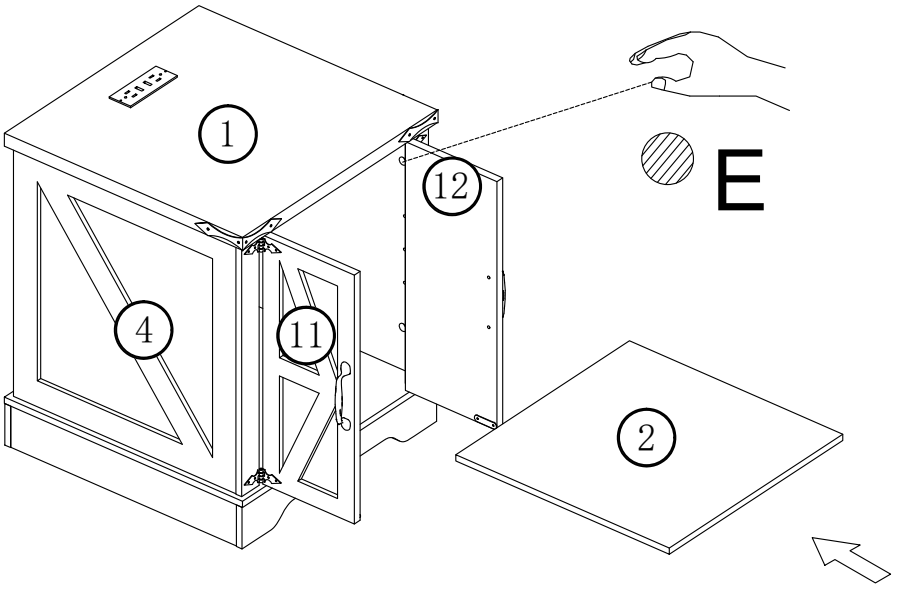

E

Sticker Cover x 14

Assembly Instructions

Step 17

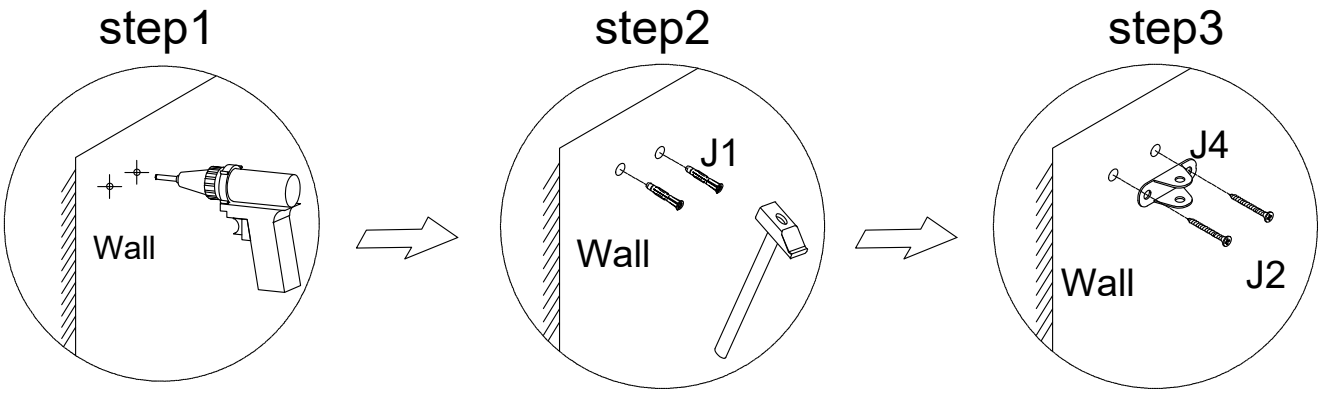

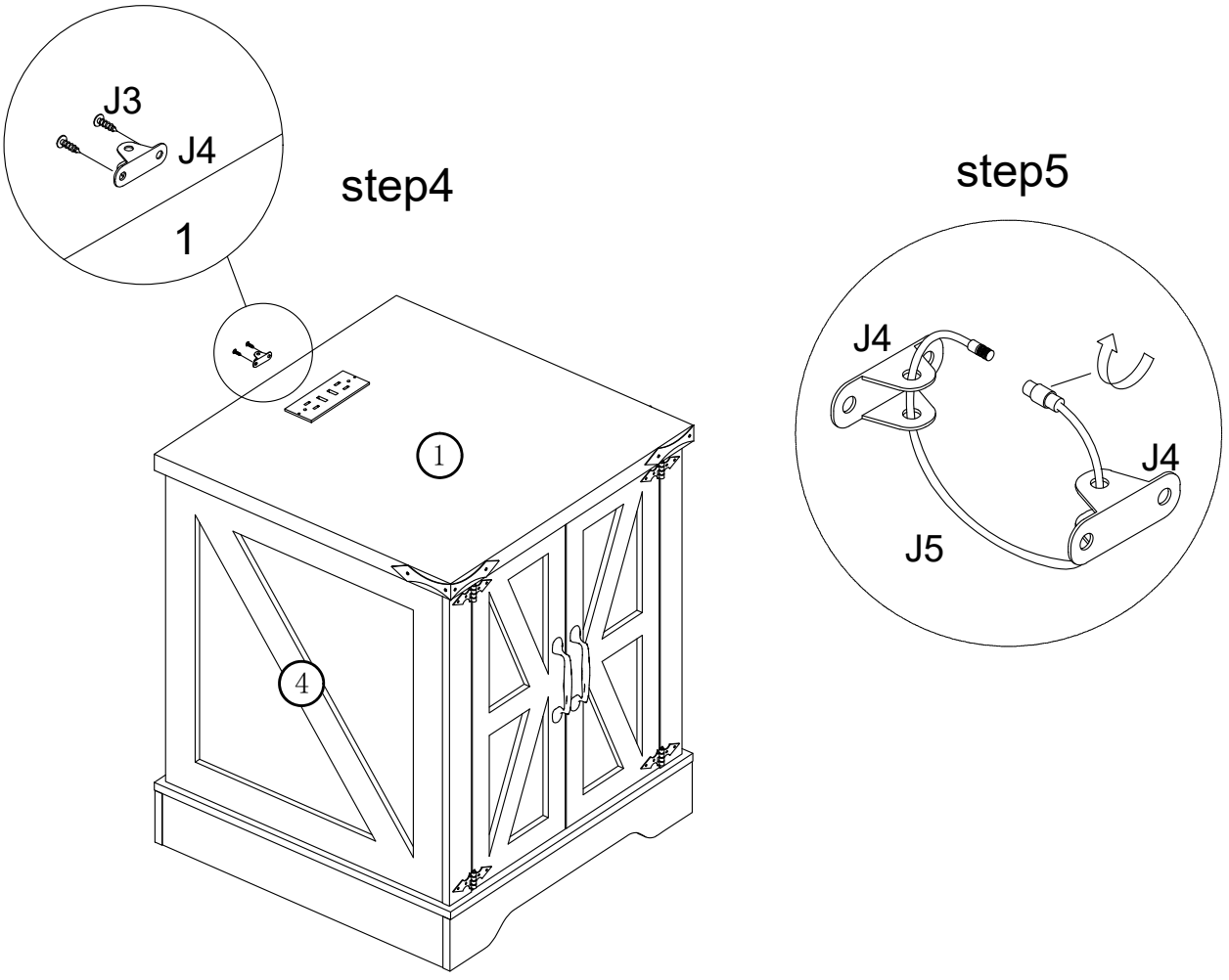

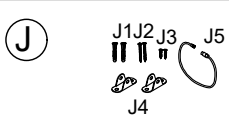

Anti -tipping device x 1

Assembly Instructions
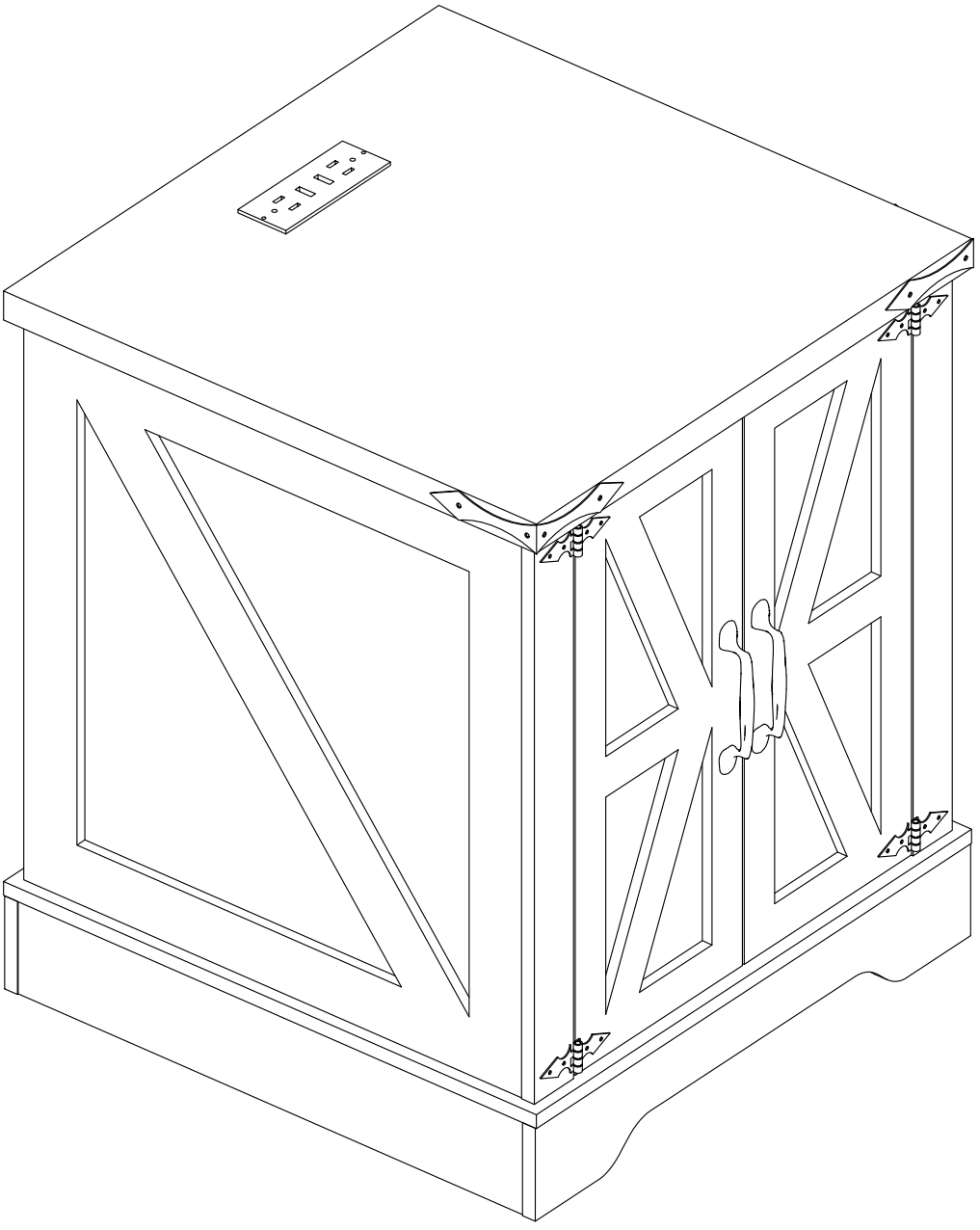
Step 18