Patio Coffee Table

Assembly Instructions

A031-020-001

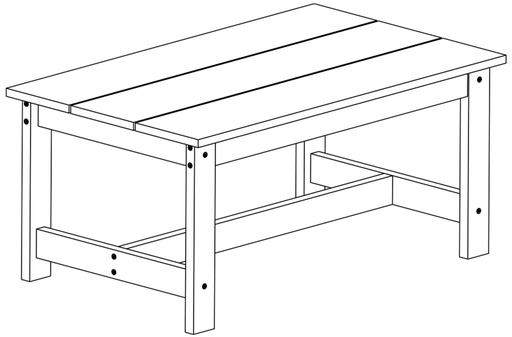

Important - Please read these instructions fully before starting assembly

HASSLE-FREE WARRANTY

We stand behind the quality of our products.

For full warranty policy, email: **poly@homeselecting.com**

220 LBS CAPACITY | 1 PERSON ASSEMBLY | AROUND 12 MIN. ASSEMBLY

Components

If you need help or have damaged or missing parts, please email: **poly@homeselecting.com**

Please check you have all the components listed below.

Note: The illustration of the product shows the exact position of each part. Check when assembling.

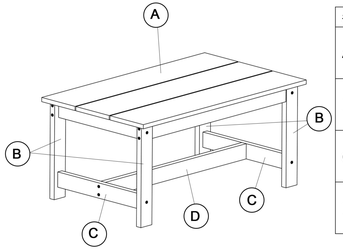

#		Description	Qty.
A		Table Top	1
B		Legs	4
C		Side Rail	2
D		Middle Rail	1

Hardware & Tools

Note: The quantities below are the correct amount to complete the assembly. In some cases more fittings may be supplied than required.

①×12

M6×60MM Screws

②×8

M6×100MM Screws

③

Hex Key (Included)

Assembly Instructions

If you need help or have damaged or missing parts, please email: **poly@homeselecting.com**

⚠ Caution: Please do not over-tighten bolts and screws during assembly.

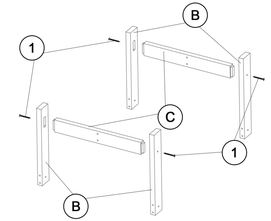

1 x 4

STEP 1

●Attach "Side Rail (C)" to "Legs (B)" - Using "①M6 x 60MM Screws" ,tighten with hex key.

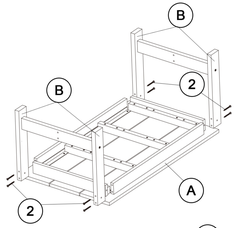

2 x 8

STEP 2

●Attach "Legs (B)" to the long side of "Table Top (A)" - Using "②M6 x 100MM Screws" ,tighten with hex key.

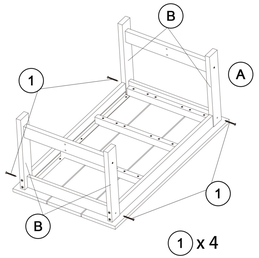

1 x 4

STEP 3

●Attach "Legs (B)" to the short side of "Table Top (A)" - Using "①M6 x 60MM Screws" ,tighten with hex key.

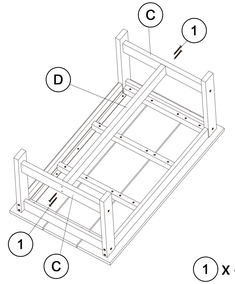

1 x 4

STEP 4

●Attach "Middle Rail (D)" to "Side Rail (C)" - Using "①M6 x 60MM Screws" ,tighten with hex key.

Warnings

If you need help or have damaged or missing parts, please email: **poly@homeselecting.com**

Important - Please read these instructions fully before starting assembly

Check you have all the components and tools listed on the page 2.

Remove all fittings from the plastic bags and separate them into their groups.

Keep children and animals away from the work area, small parts may cause choking if swallowed.

Make sure you have enough space to layout the parts before starting.

Assemble on a soft level surface to avoid damaging the unit or your floor.

Do not stand or put weight on the product, this could cause damage.

Assemble the item as close to its final position (in the same area) as possible.

Do not place furniture directly in front of radiators, fires, or any other source of heat.

The assembly will be easier with 2 people while 1 person could also do the job.

Refer to the LISTING page for specific installation videos.

Cleaning & Maintenance

●Clean the product with a solution of mild soap and water. Dip a soft cloth or sponge into the solution and wipe down the entire surface.

●After cleaning, thoroughly rinse the furniture with water to remove any remaining soap residue.

●When not in use, cover the product with a protective cover to keep it clean and prolong its lifespan.