SKU:W00132

LOFT BED
ASSEMBLY INSTRUCTIONS

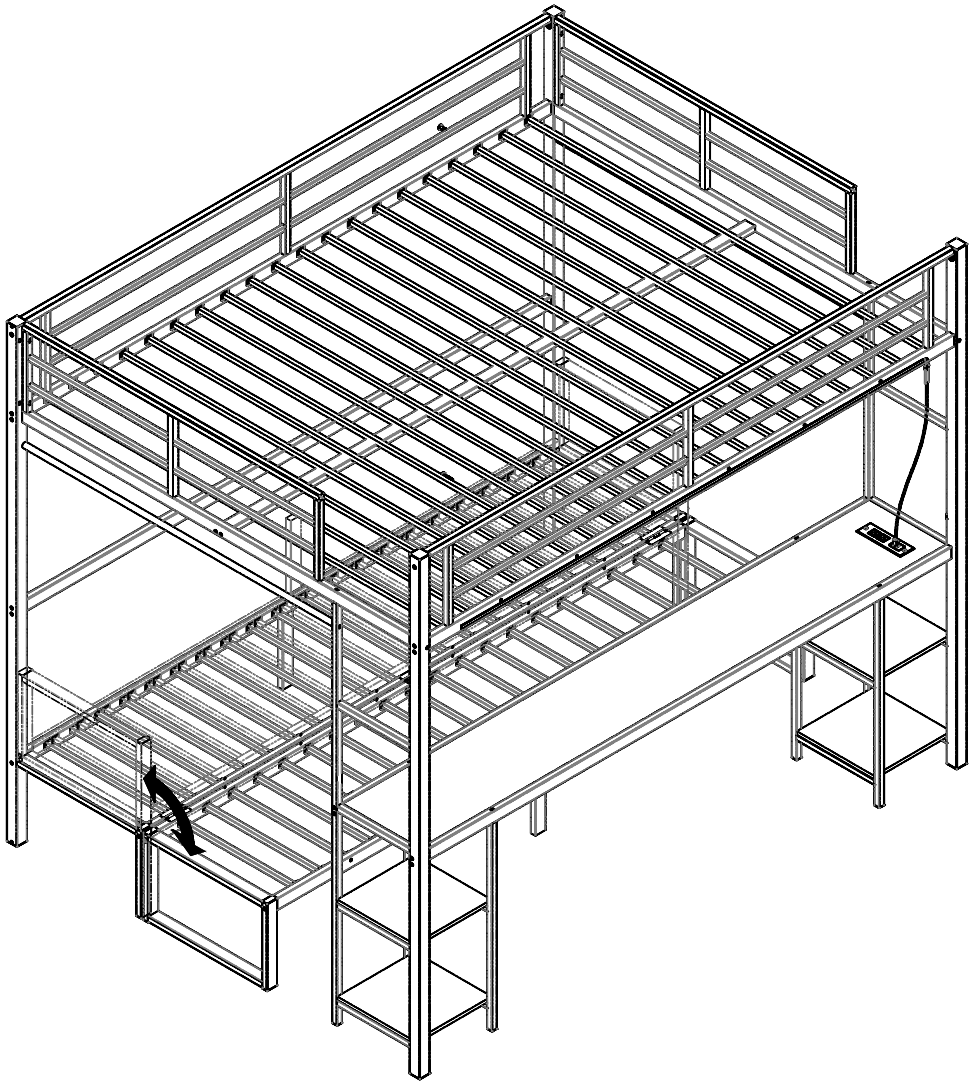

SAFETY WARNINGS AND GENERAL NOTES:

1. Follow the information on the warnings on the bunk bed end structure and on the carton. Do not remove the warning label from the bed.
2. Always use the recommended size mattress on mattress support, or both, to help prevent the likelihood of entrapment or falls.
3. Do not allow children under 6 years of age to use the upper bunk.
4. Periodically check and ensure the guardrail, ladder and other components are in their proper position, free from damage, and all connectors are tight.
5. Do not allow horseplay on or under beds.
6. Always prohibit jumping on the bed.
7. Prohibit more than one person on upper bunk.
8. Always use the ladder for entering and leaving the upper bunk.
9. Do not use substitute parts. Contact the manufacturer or dealer for replacement parts.
10. Use of a night-tight may provide added safety precaution for a child using the upper bunk.
11. Always use guardrails on both long sides of the upper bunk.
12. If the bunk bed will be placed next to a wall, the guardrail that runs the full length of the bed should be placed against the wall to prevent entrapment between the bed and the wall.
The use of water or sleep flotation mattresses is prohibited.
13. **STRANGULATION HAZARD**-Never attach or hang items to any part of the bunk bed that are not designed for use with the bed; for example, but not limited to, hooks, belts and jump ropes.
14. Keep these instructions for future reference.
15. We recommend assembling your bunk bed on the shipping carton to protect your floor or carpet.
16. Be certain all staples are out of the box before beginning assembly on the shipping carton.
17. USE ONLY MATTRESSES WHICH ARE AS THE TABLE BELOW ON UPPER AND ON LOWER BUNKS.

Down bed

Mattress type	Length	Width	Thickness
Twin xl Standard	79”-80”	39-40"	6-8”

Up bed (bunk bed and tribed included)

Mattress type	Length	Width	Thickness
Queen Standard	79”-80”	59-60"	6”Max

18. SURFACE OF MATTRESS MUST BE AT LEAST 5"(127MM) BELOW THE UPPER EDGE OF GUARDRAILS.
19. Replacement Parts:
Replacement Parts, including additional guardrails, may be obtained from any of our （Shenzhen Yuefeng Zhiqi Technology Co., Ltd）dealers.

Bed parts view

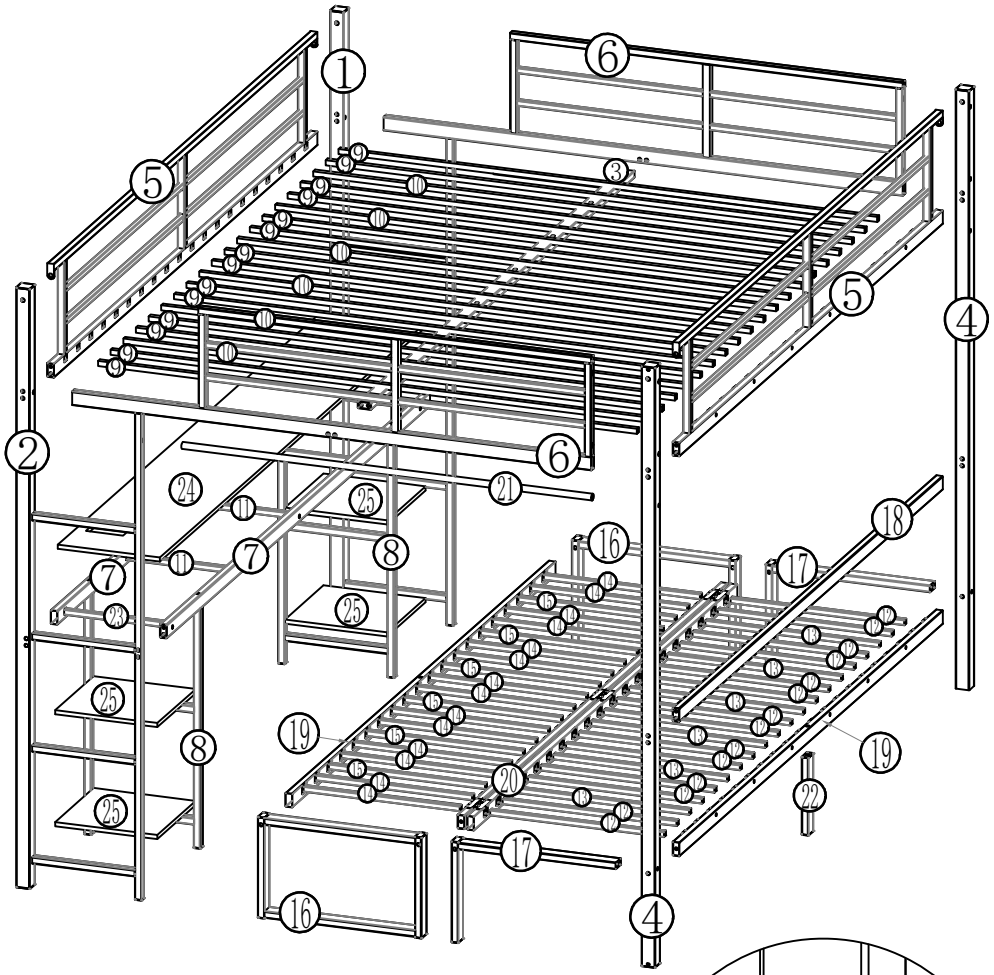

Unit 21 can be installed on the left or right side of the bed，Please use #Z to plug the extra screw holes to make the bed look more beautiful.

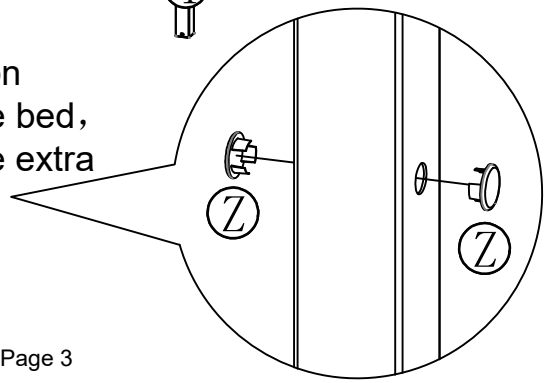

Part List

1-1pcs	2-1pcs	3-1pcs	4-2pcs
5-2pcs	6-2pcs	7-2pcs	8-2pcs
9-14pcs	10-6pcs	11-2pcs	12-14pcs
13-6pcs	14-14pcs	15-6pcs	16-2pcs
17-2pcs	18-1pcs	19-2pcs	20-1pcs
21-1pcs	22-2pcs 23-3pcs	24-1pcs	25-4pcs

Hardware List

P Socket 1pcs	Q Light strips 1pcs	Z 4pcs

A 4*10 2PCS	C 8*35 13PCS	D 8*55 37PCS	E 6*36 48PCS	F 8*15 8PCS	K 120PCS	O 1PCS	M L

Step 1: Use hardware L,C,D,F to connect #1,#4,#6,#17 and #21 together.

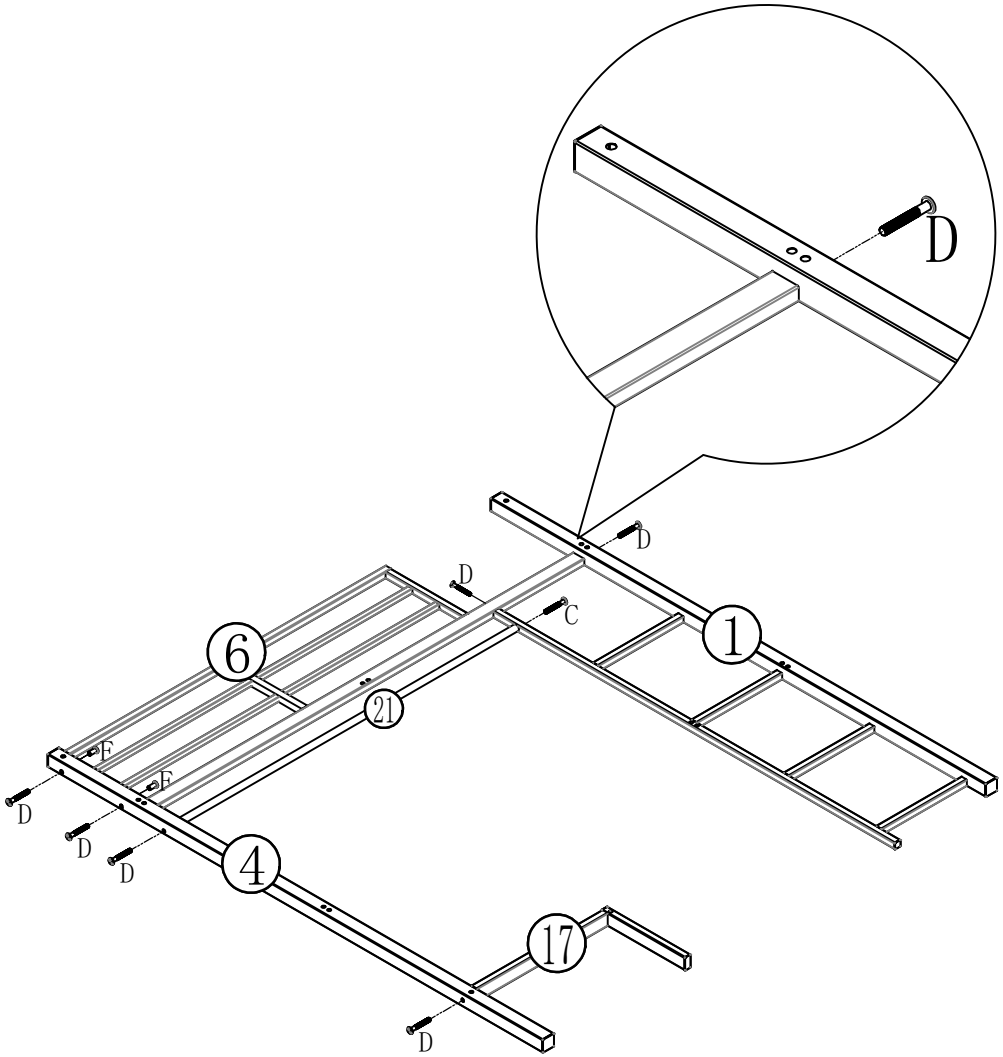

1-1pcs	6-1pcs	17-1pcs	D 8*55-6PCS	C 8*35-1PCS
4-1pcs	21-1pcs		F 8*15-2PCS	L

Step 2: Use hardware L,D,F to connect #2,#4,#6,#17 and #21 together.

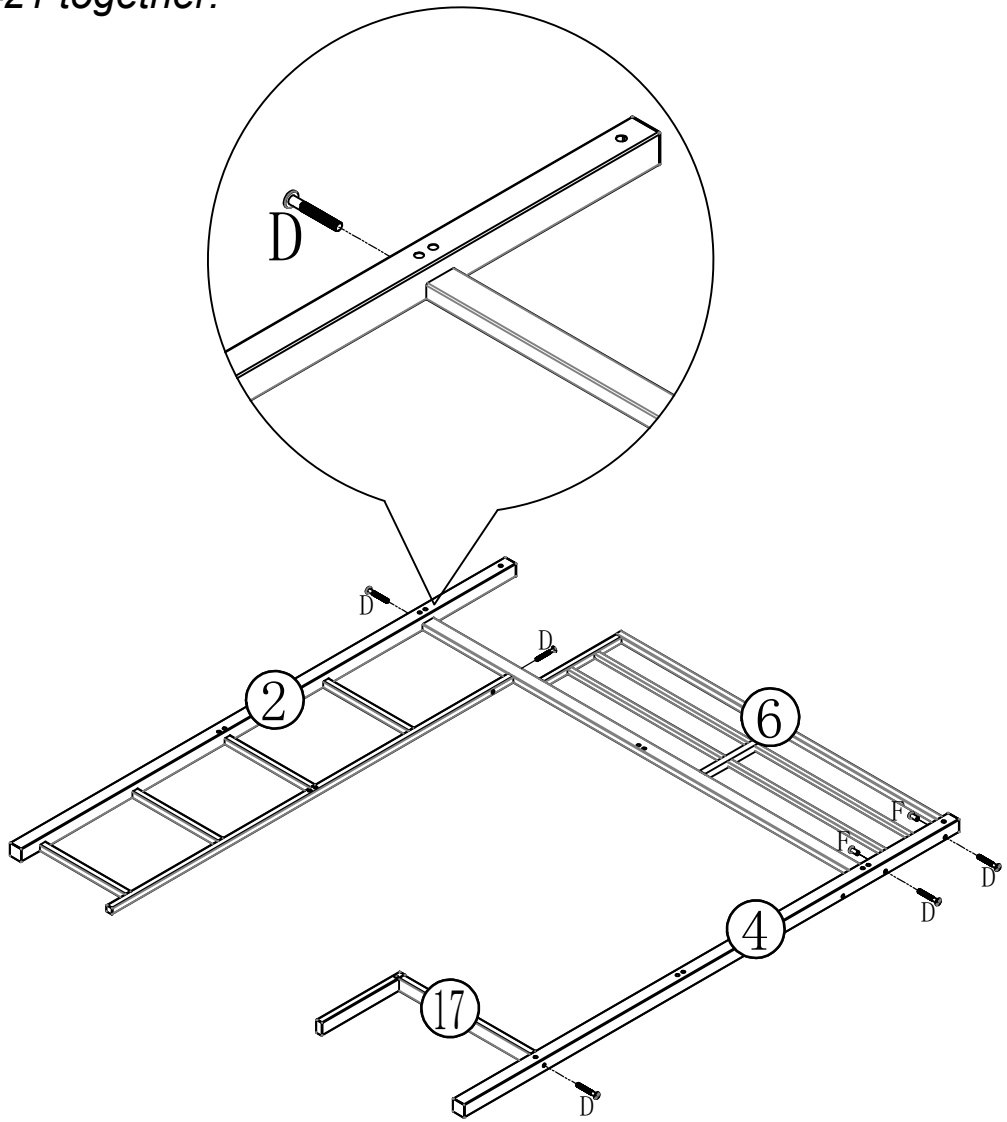

2-1pcs	6-1pcs	17-1pcs	D 8*55-5PCS	L
4-1pcs			F 8*15-2PCS	

Step 3: Use hardware L,C,D,F to connect #3 and #5 to the previously installed components.

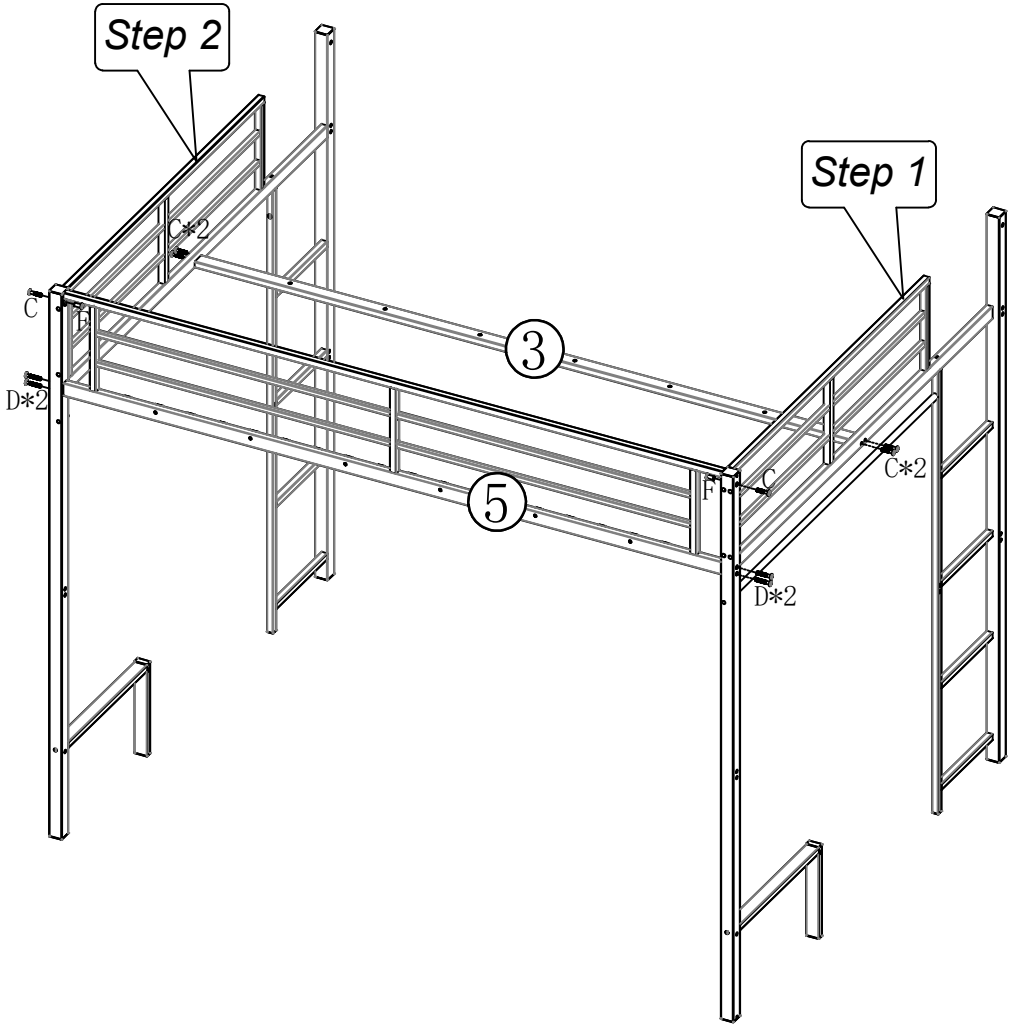

3-1pcs	5-1pcs	C 8*35-6PCS	D 8*55-4PCS F 8*15-2PCS	L

Step 4: *Install part #K to parts #5， Then* Use hardware L,E to connect #10 *to the previously installed components.*

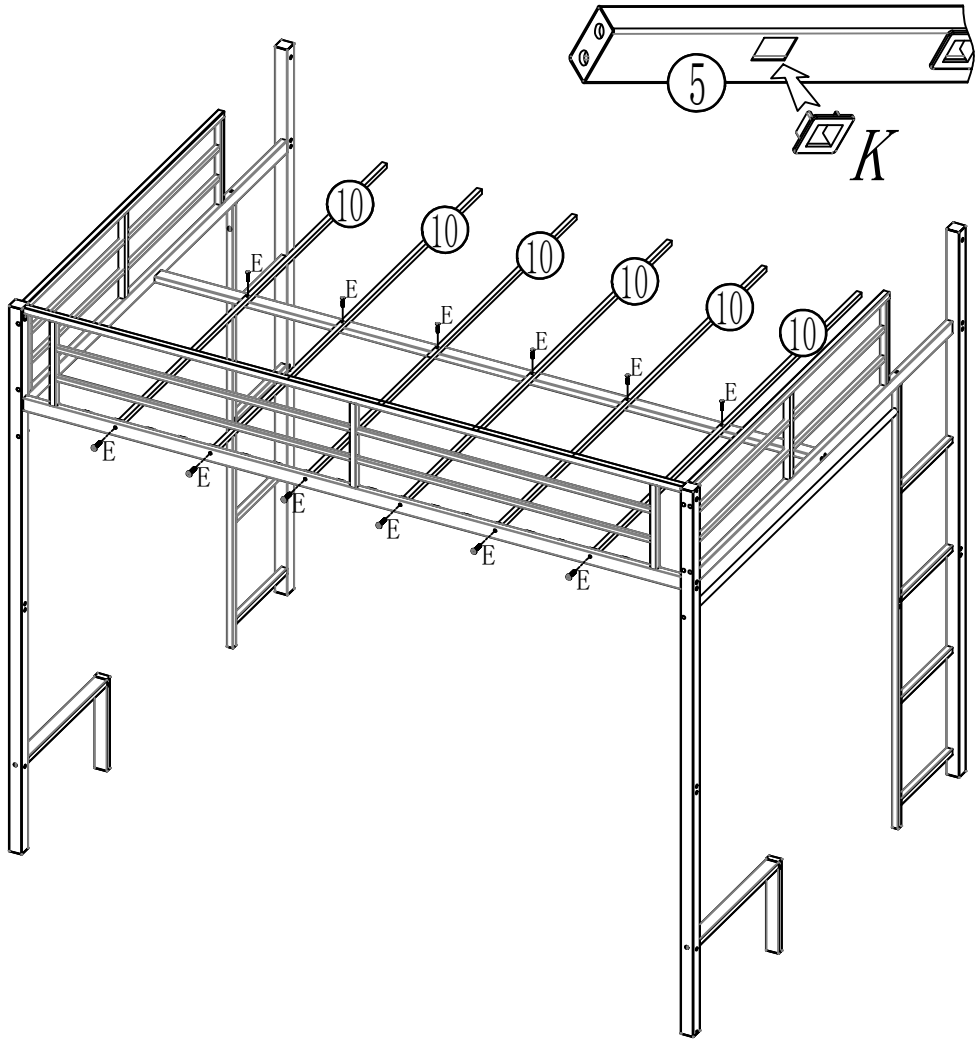

10-6pcs	K-20PCS	E 6*30-12PCS	L

Step 5: Connect #9 to the previously installed components.

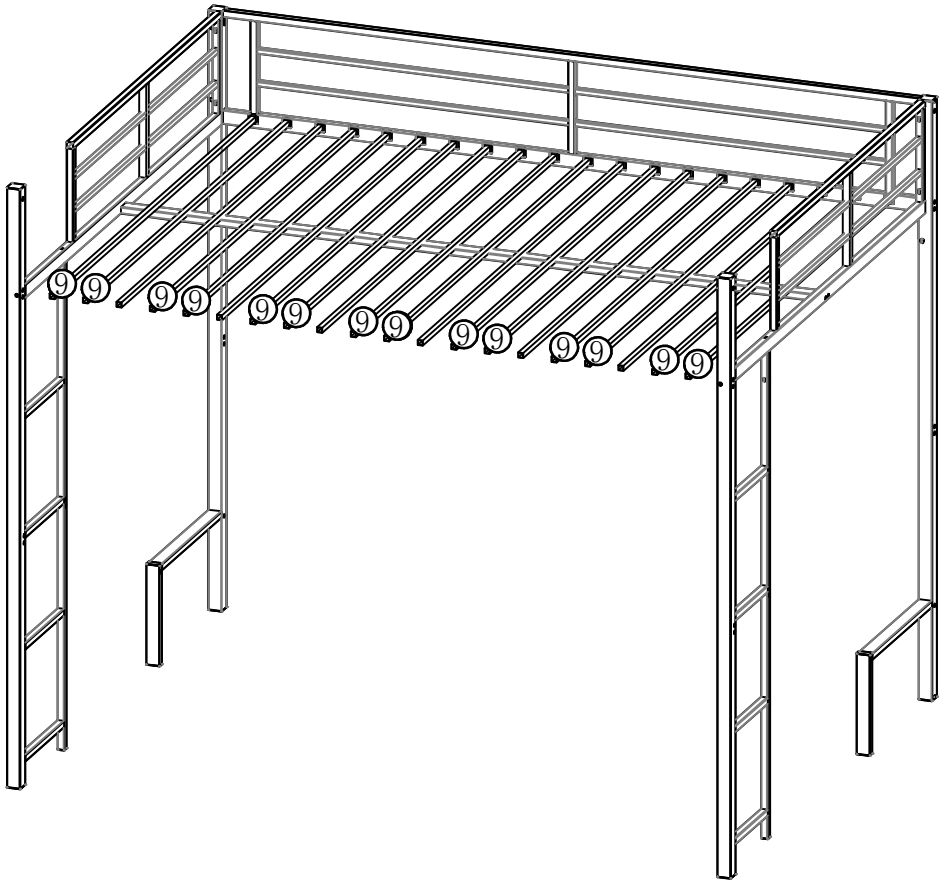

9-14pcs

Step 6: *Install part #K to parts #5，Then* Use hardware L,C,D,F,E to connect #5 *to the previously installed components.*

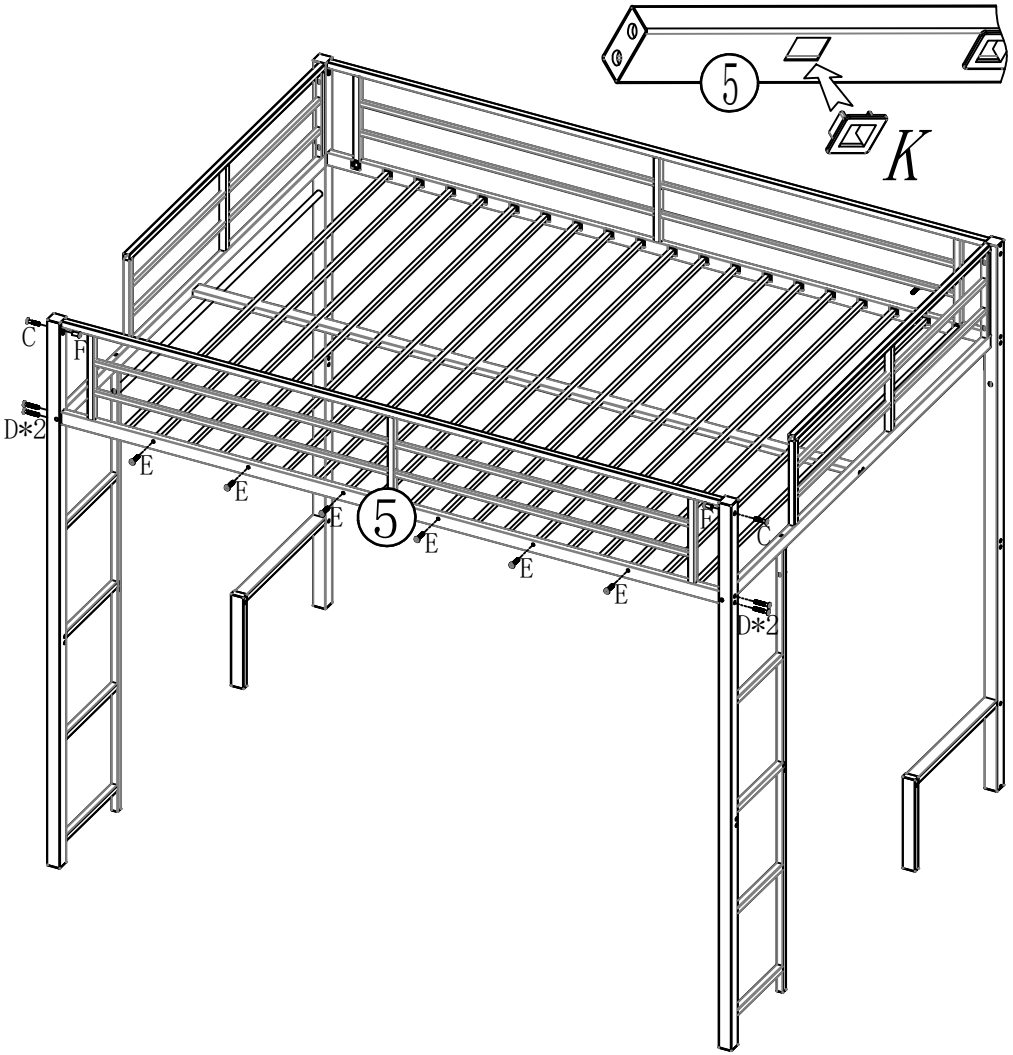

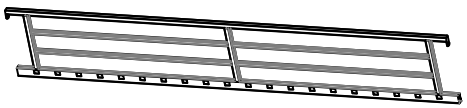

5-1pcs

C
8*35-2PCS

D
8*55-4PCS

F
8*15-2PCS

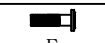

E
6*30-6PCS

K
20PCS

L

Step 7: Install part #K to parts #19 and #20 and Use hardware L and D to connect #19 and #22 together.

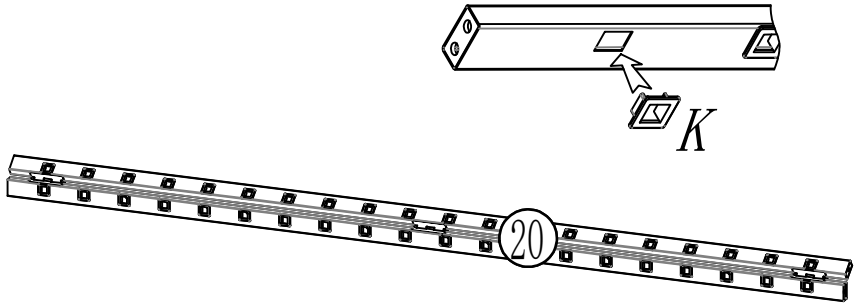

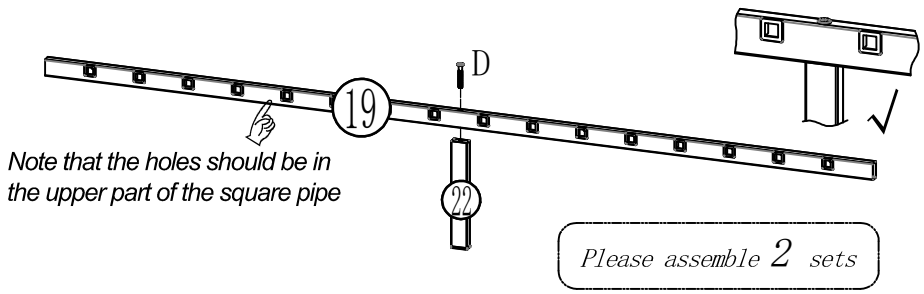

19-2pcs	22-2pcs	K 80PCS	D 8*55-2PCS	L
20-1pcs				

Step 8: Use hardware L,D,E to connect #12,#13,#19 and #20 to the previously installed components.

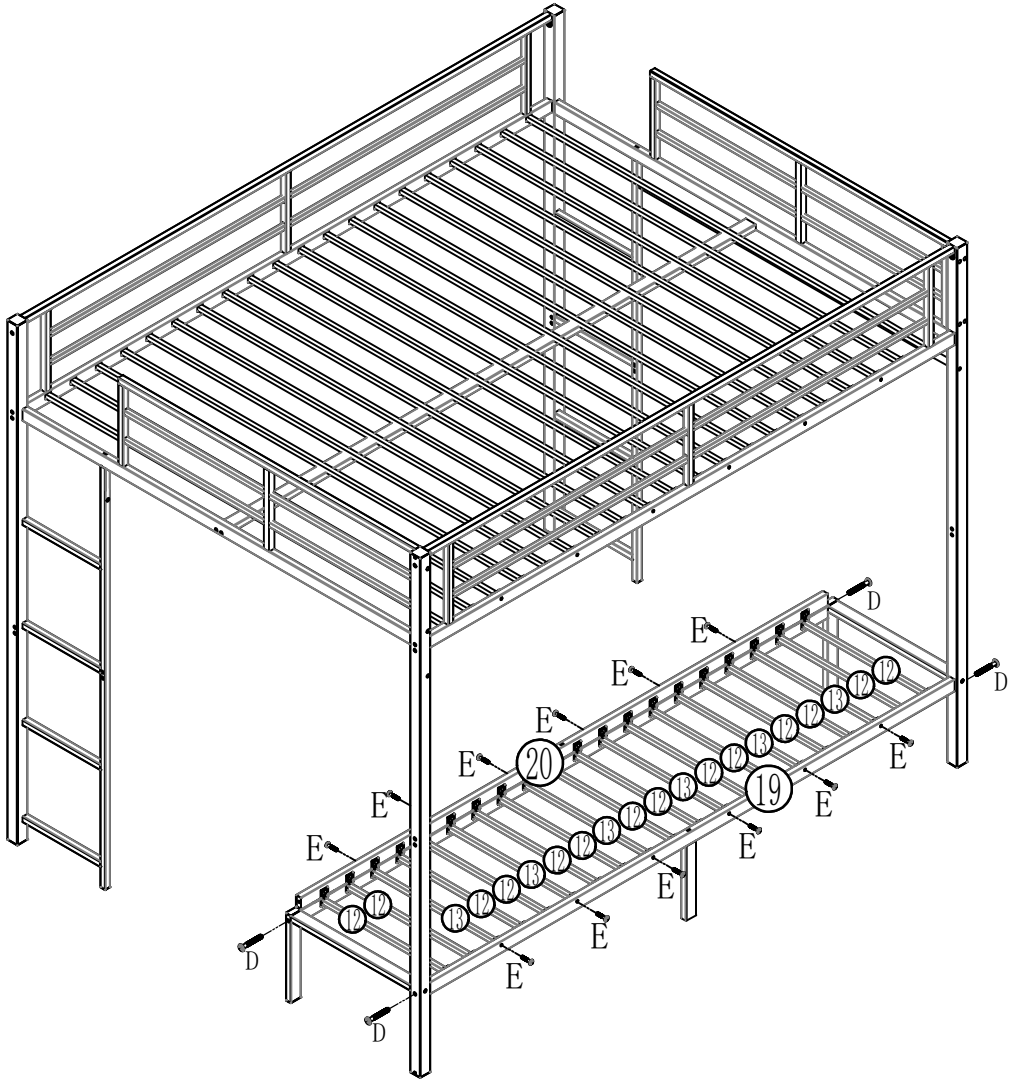

12-14pcs	19-1pcs	D 8*55-4PCS	E 6*30-12PCS	L
13-6pcs	20-1pcs			

Step 9: Use hardware L,D to connect #16 to the previously installed components.

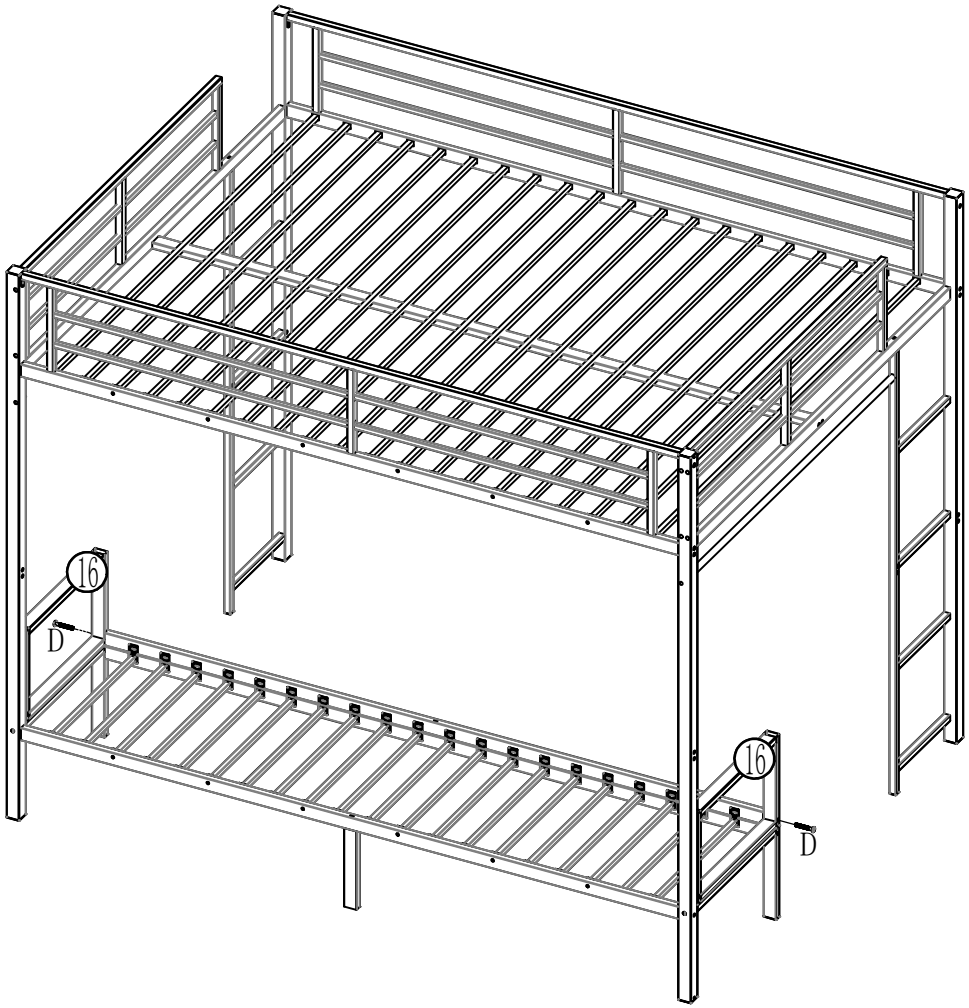

16-2pcs	D 8*55-2PCS	L

Step 10: Use hardware L,D,E to connect #14,#15 and #19 to the previously installed components.

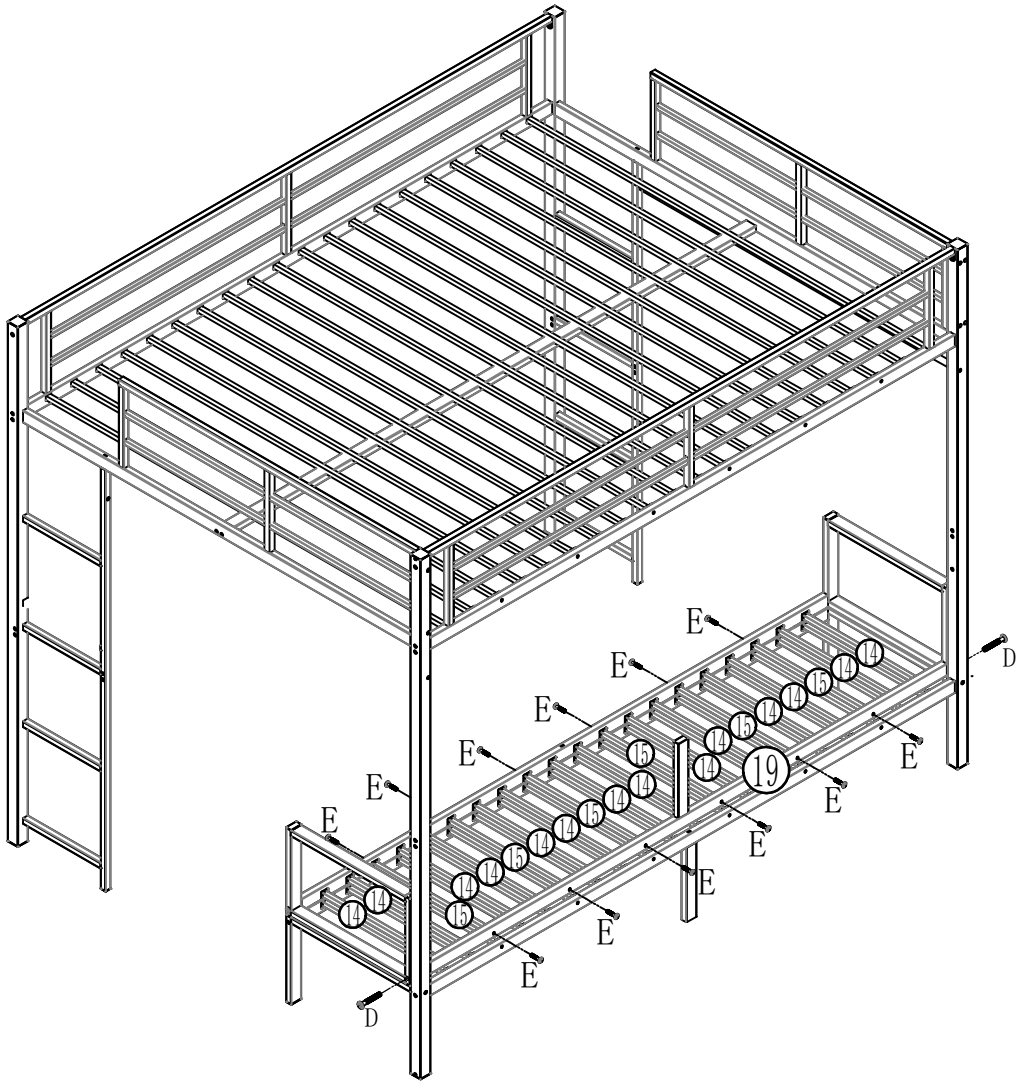

14-14pcs 15-6pcs	19-1pcs	D 8*55-2PCS	E 6*30-12PCS	L

Step 11: Use hardware L,C,D to connect #7 and #18 to the previously installed components.

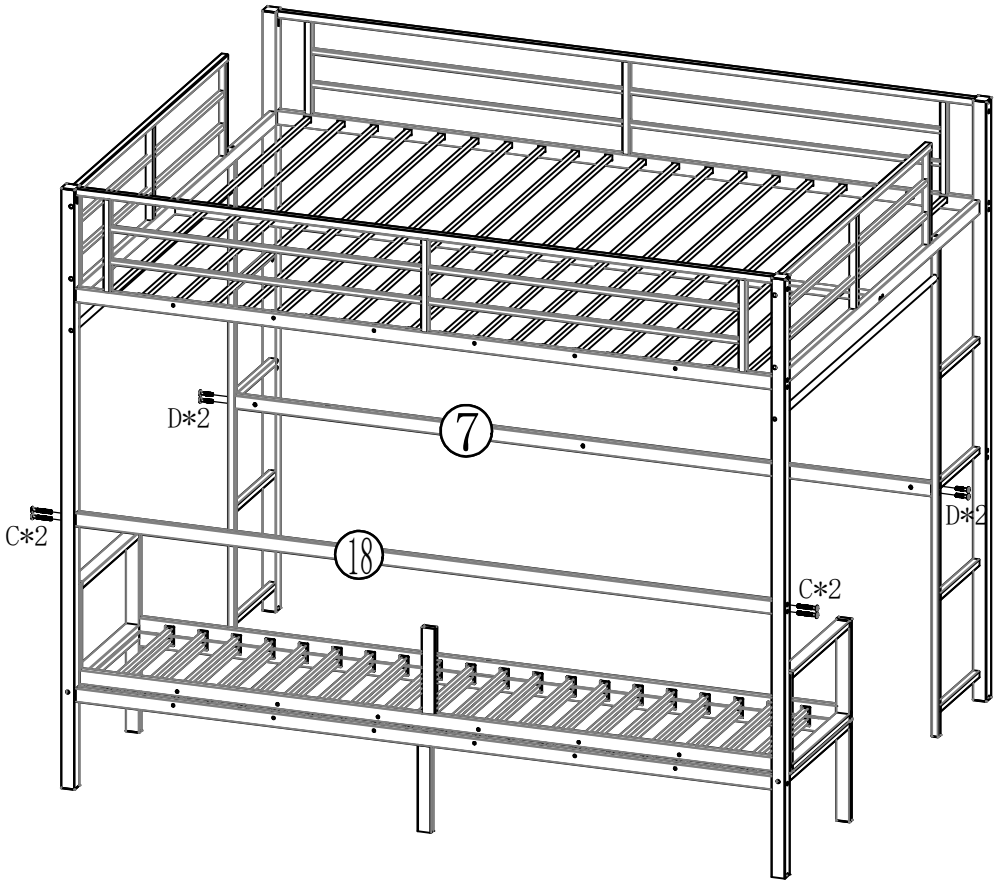

7-1pcs	C 8*35-4PCS	L
18-1pcs	D 8*55-4PCS	

Step 12: Use hardware L,C,E to connect #7 and #11 to the previously installed components.

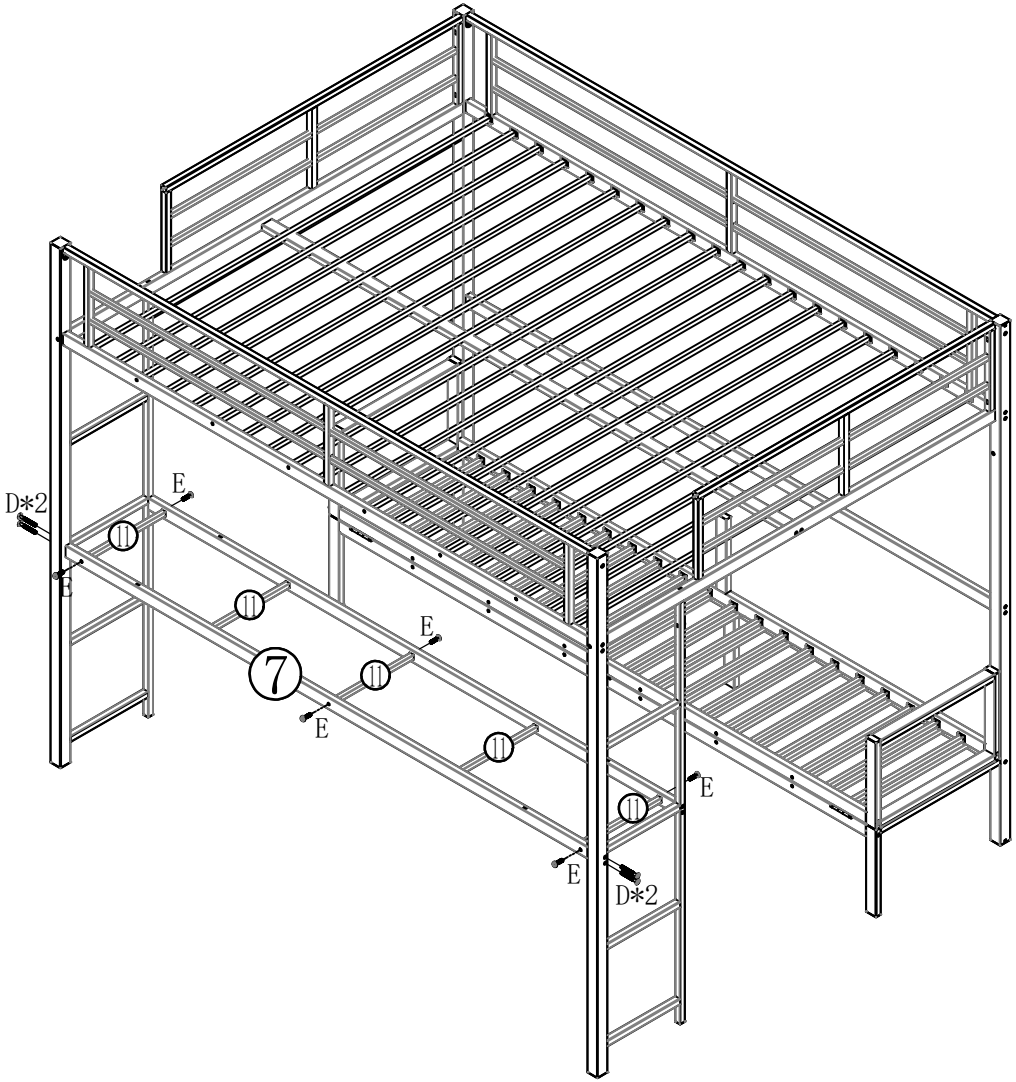

7-1pcs		D 8*55-4PCS	L
11-2pcs	23-3pcs	E 6*30-6PCS	

Step 13: Use hardware L,D to connect #8 to the previously installed components.

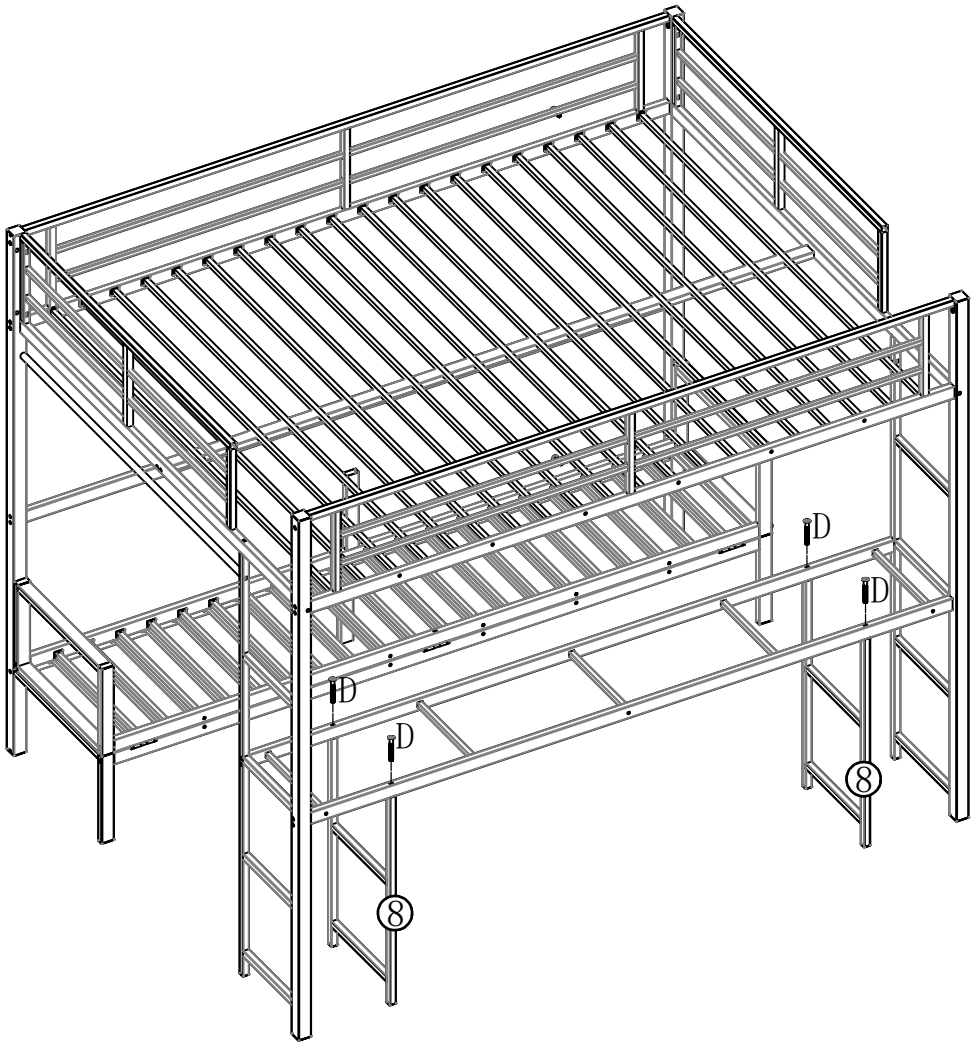

Step 14: Install #23 and #24 to the previously installed components.

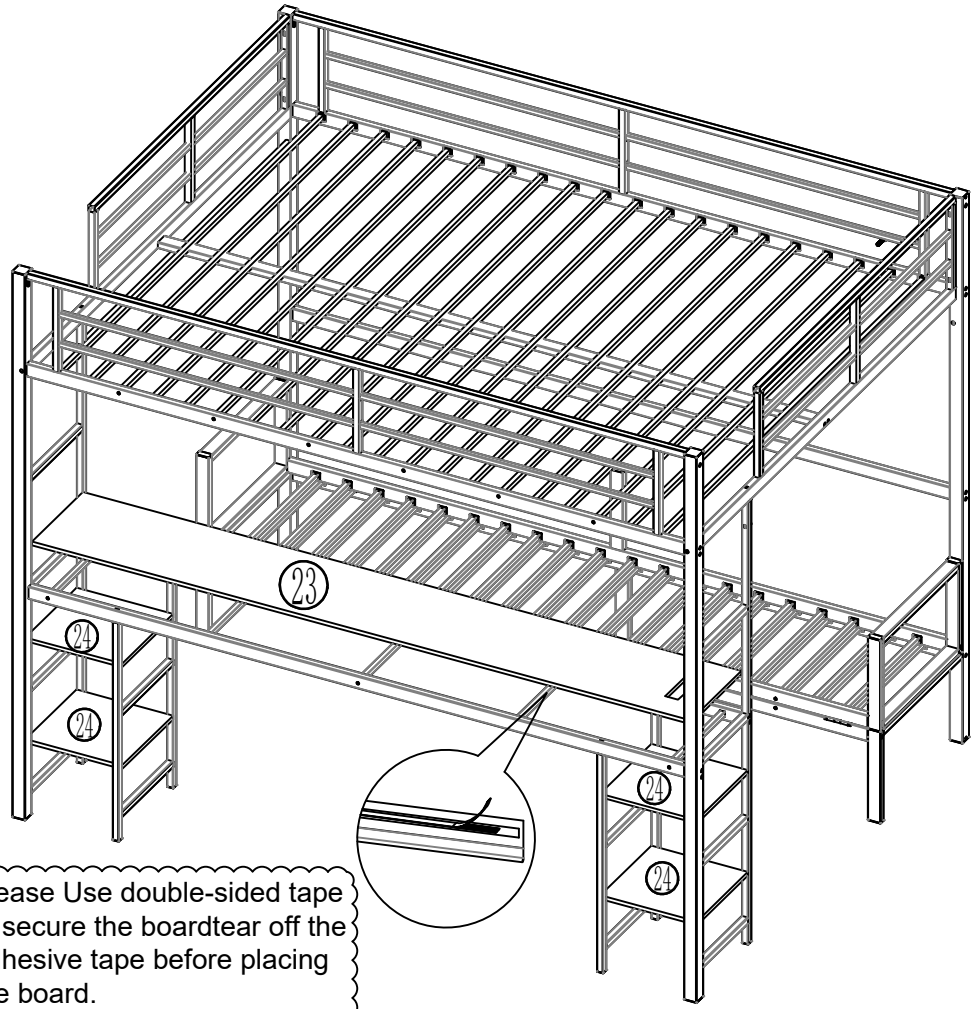

Please Use double-sided tape to secure the boardtear off the adhesive tape before placing the board.

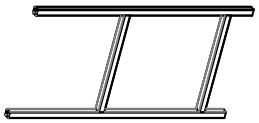		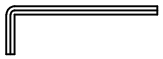	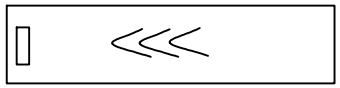		
8-2pcs	D 8*55-4PCS	L	23-1pcs	24-4pcs	0

Step 15: First Use hardware M、A install #P to #23 and then Stick part Q (light strip) at back of #5 and connect the partP (socket) with USB.

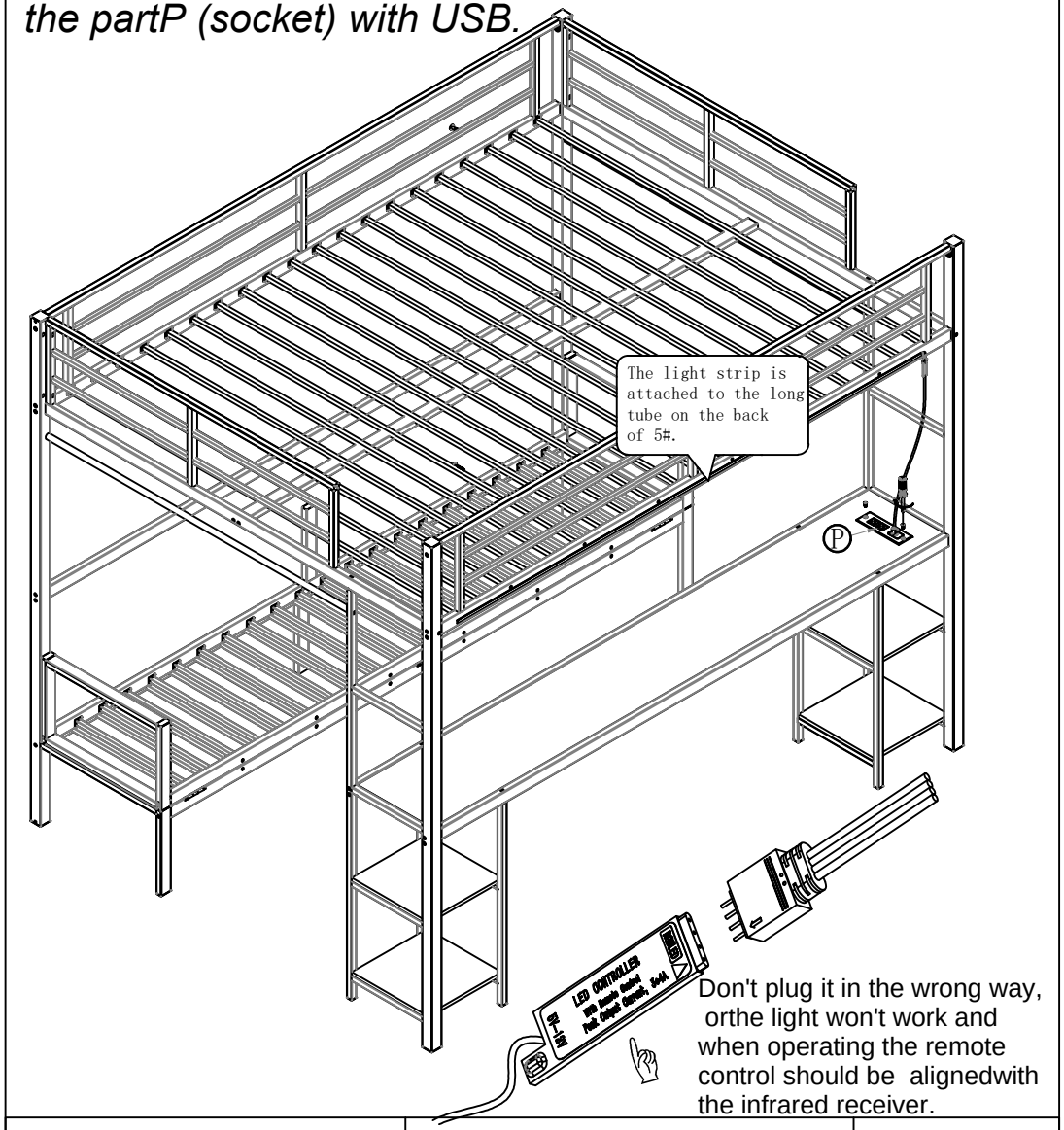

Don't plug it in the wrong way, orthe light won't work and when operating the remote control should be alignedwith the infrared receiver.

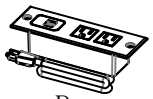

P
Socket-1pcs

Q
Light strips
1pcs

A 4*10-2PCS

M

Completed loft bed

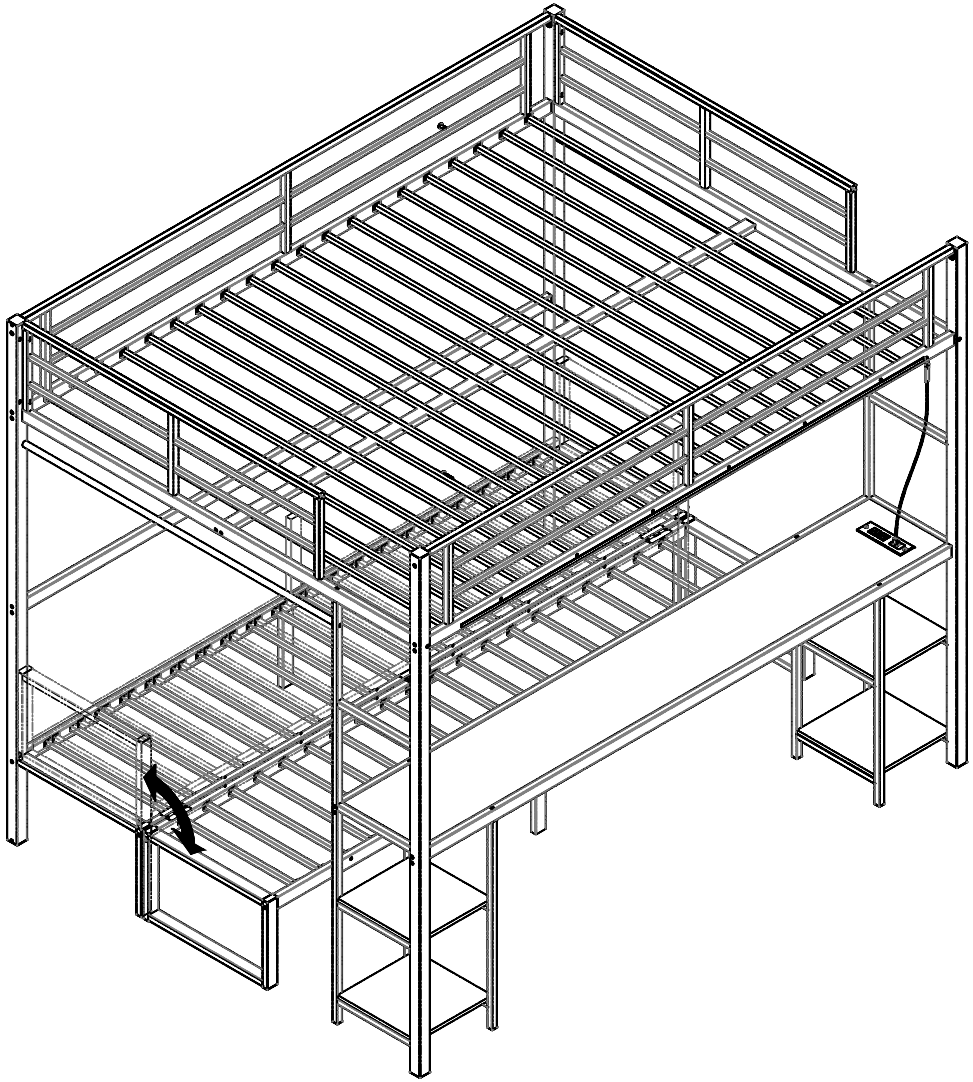

Please make sure all bolts are fastened before use, thank you.