2-Piece Patio Single Sofa

Assembly Instructions **A116-001-001**

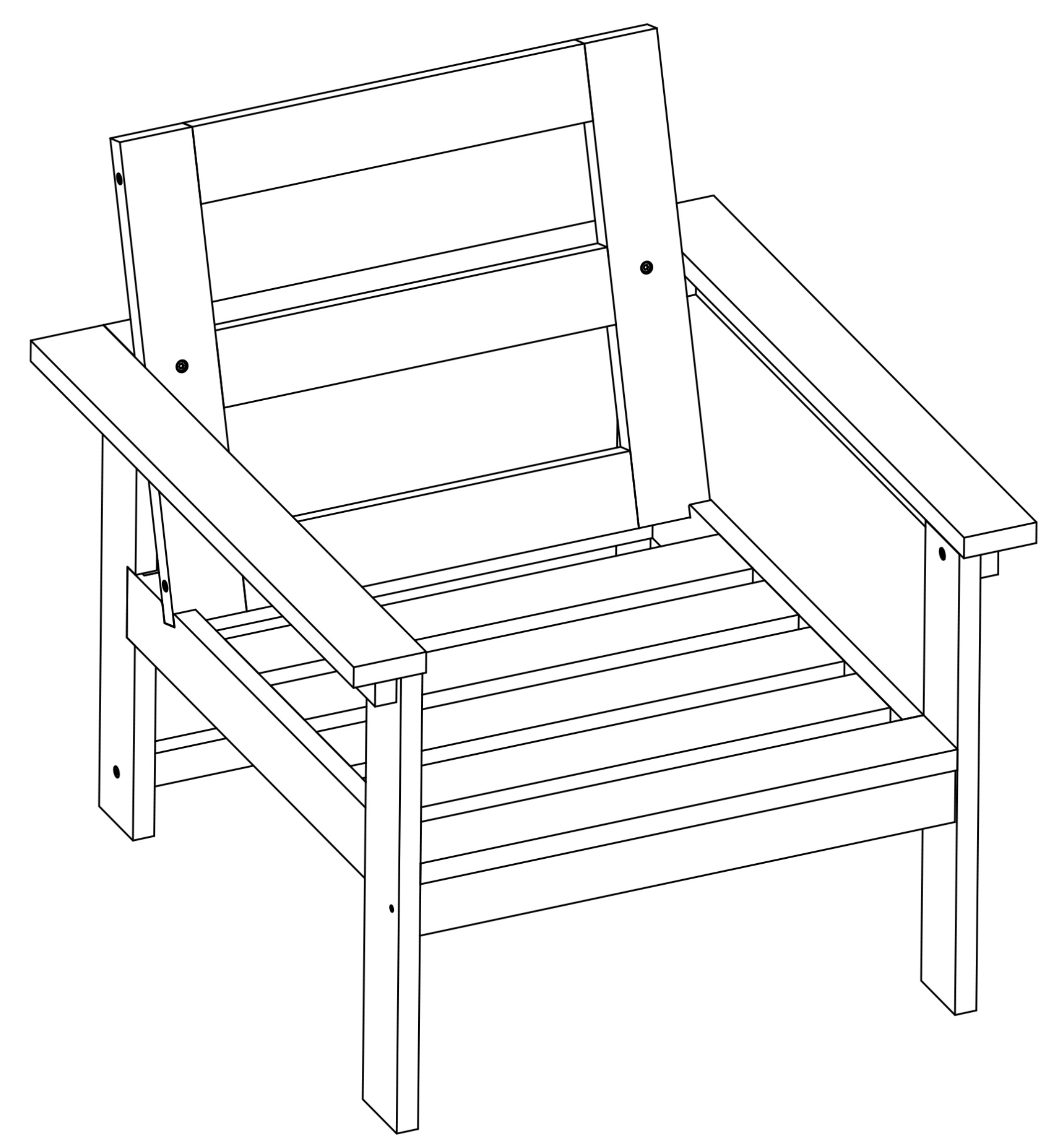

Important - Please read these instructions fully before starting assembly

HASSLE-FREE WARRANTY
We stand behind the quality of our products.
For full warranty policy, email: **poly@homeselecting.com**

360 LBS CAPACITY

1 PERSON ASSEMBLY

AROUND 15 MIN. ASSEMBLY

Components

If you need help or have damaged or missing parts, please email: **poly@homeselecting.com**

Please check you have all the components listed below.

Note: The illustration of the product shows the exact position of each part. Check when assembling.

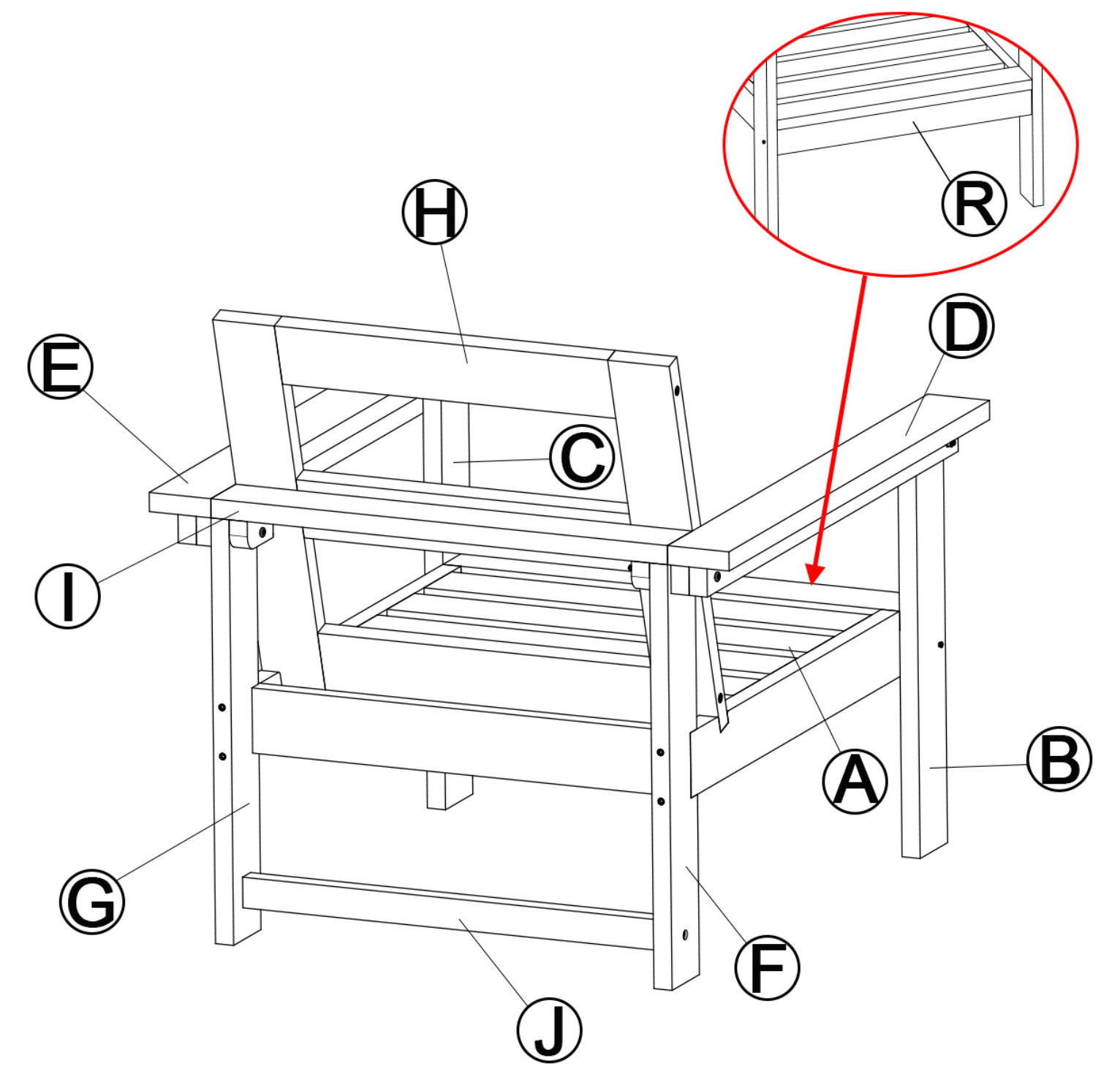

#		Description	Qty.
A	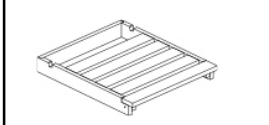	Seat Frame of Single Chair	1
B	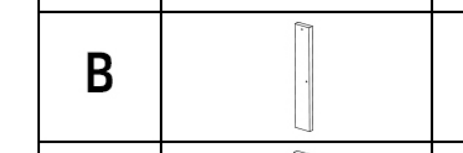	Right Front Leg	1
C	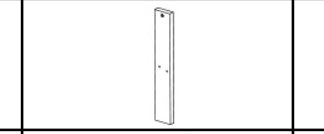	Left Front Leg	1
D	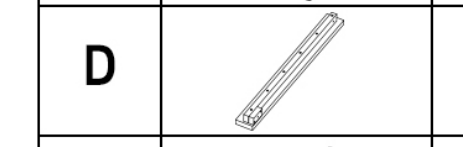	Right Armrest	1
E	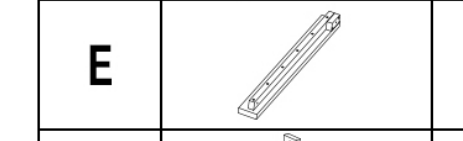	Left Armrest	1
F	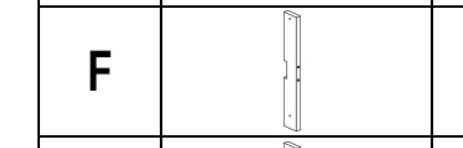	Right Rear Leg	1
G	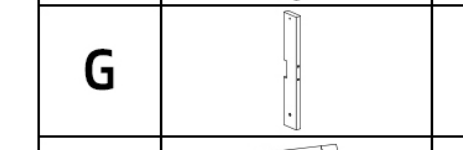	Left Rear Leg	1
H	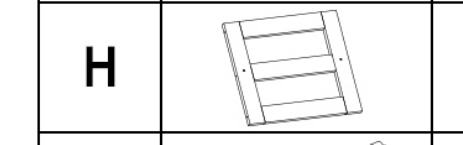	Backrest	1
I	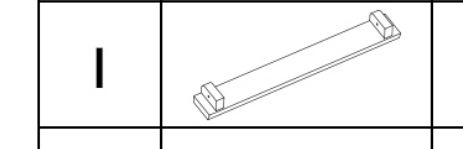	Rear Leg Upper Rail	1
J	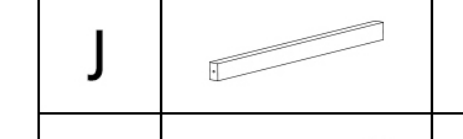	Rear Leg Bottom Rail	1
R	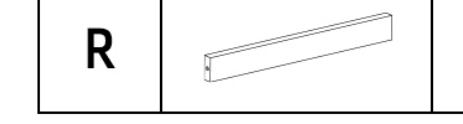	Seat Front Panel	1

Hardware & Tools

Note: The quantities below are the correct amount to complete the assembly. In some cases more fittings may be supplied than required.

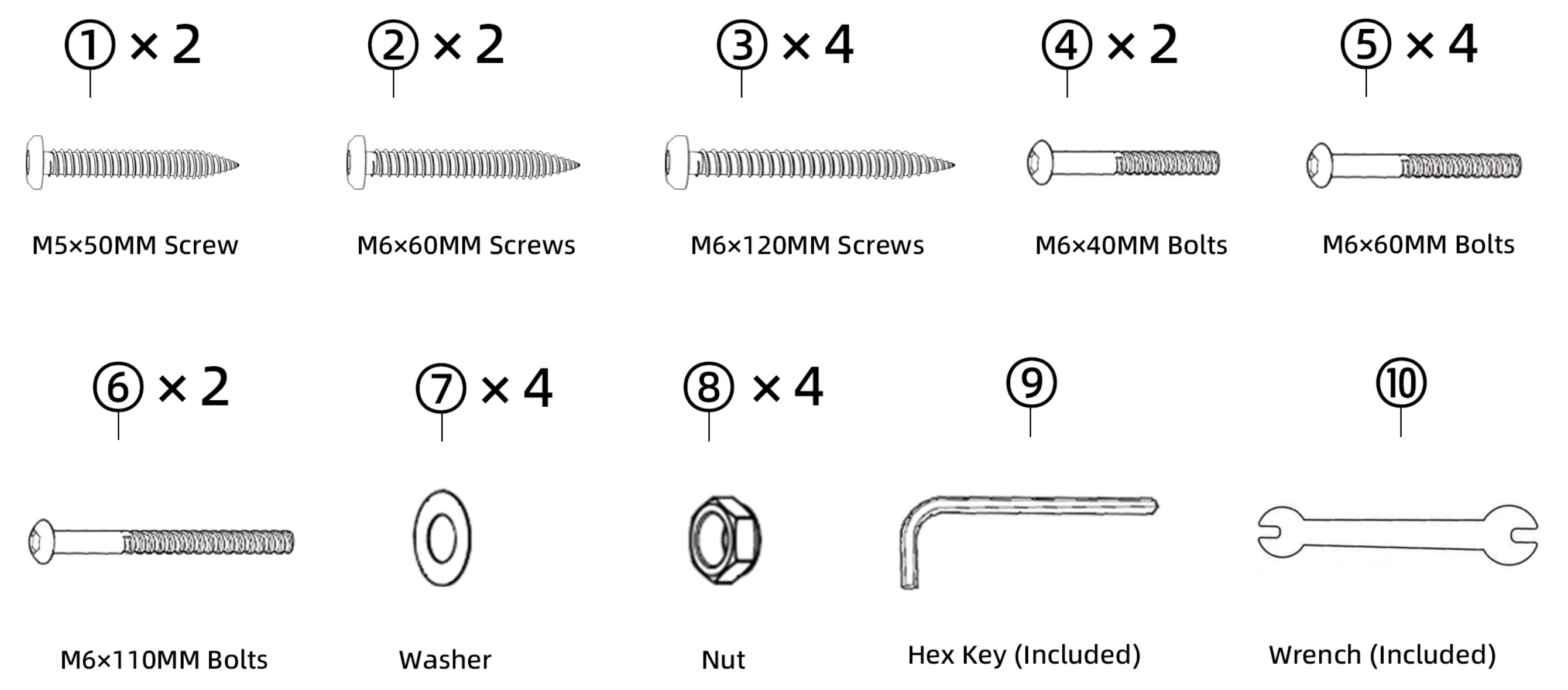

① × 2 M5×50MM Screw

② × 2 M6×60MM Screws

③ × 4 M6×120MM Screws

④ × 2 M6×40MM Bolts

⑤ × 4 M6×60MM Bolts

⑥ × 2 M6×110MM Bolts

⑦ × 4 Washer

⑧ × 4 Nut

⑨ Hex Key (Included)

⑩ Wrench (Included)

Assembly Instructions

If you need help or have damaged or missing parts, please email: **poly@homeselecting.com**

⚠ Caution: Please do not over-tighten bolts and screws during assembly.

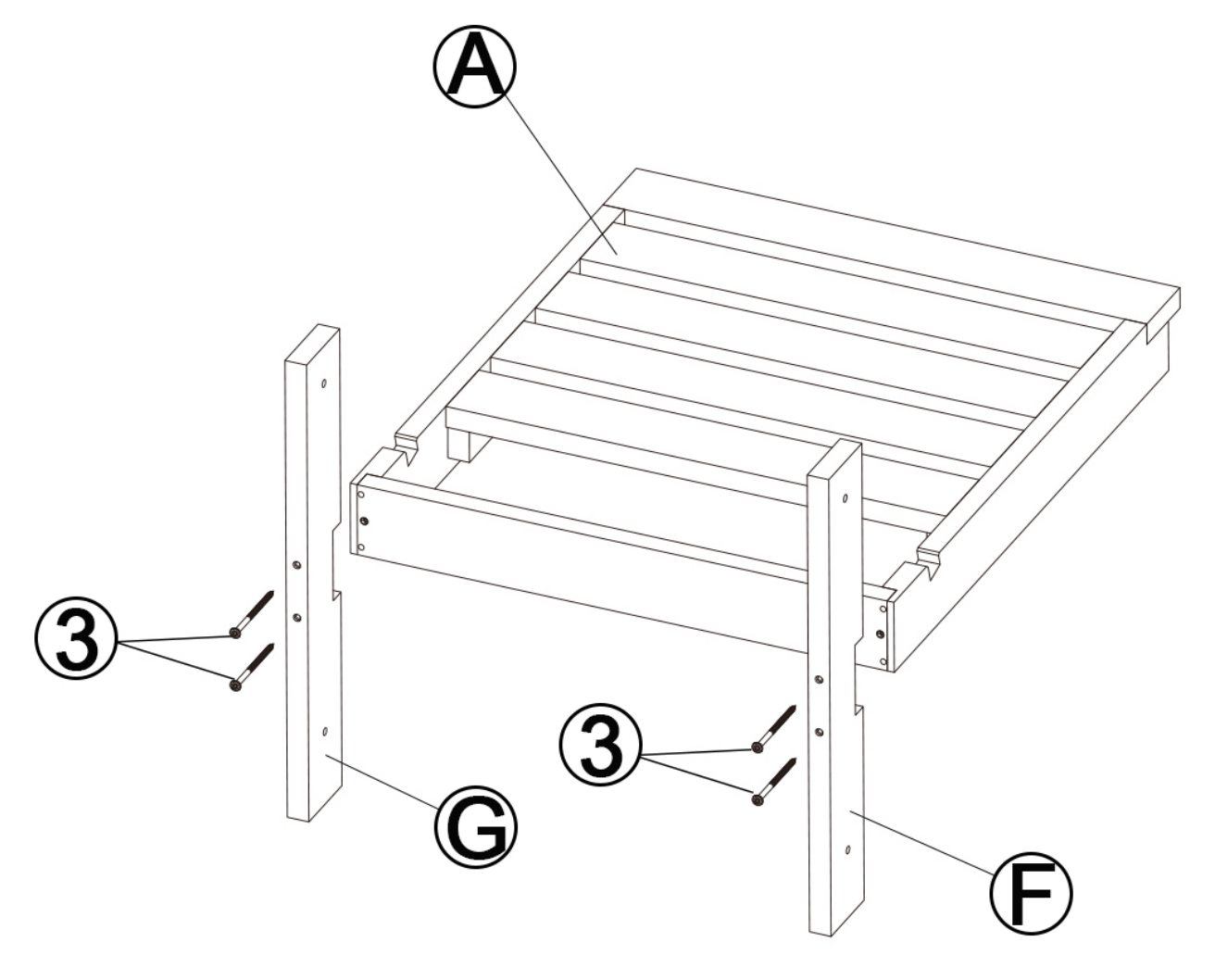

③ x 4

STEP1

- ●Attach "Right Rear Leg (F)" and "Left Rear Leg (G)" to "Seat Frame of Single Chair (A)" - Using "③M6 x 120MM Screws" ,tighten with hex key.

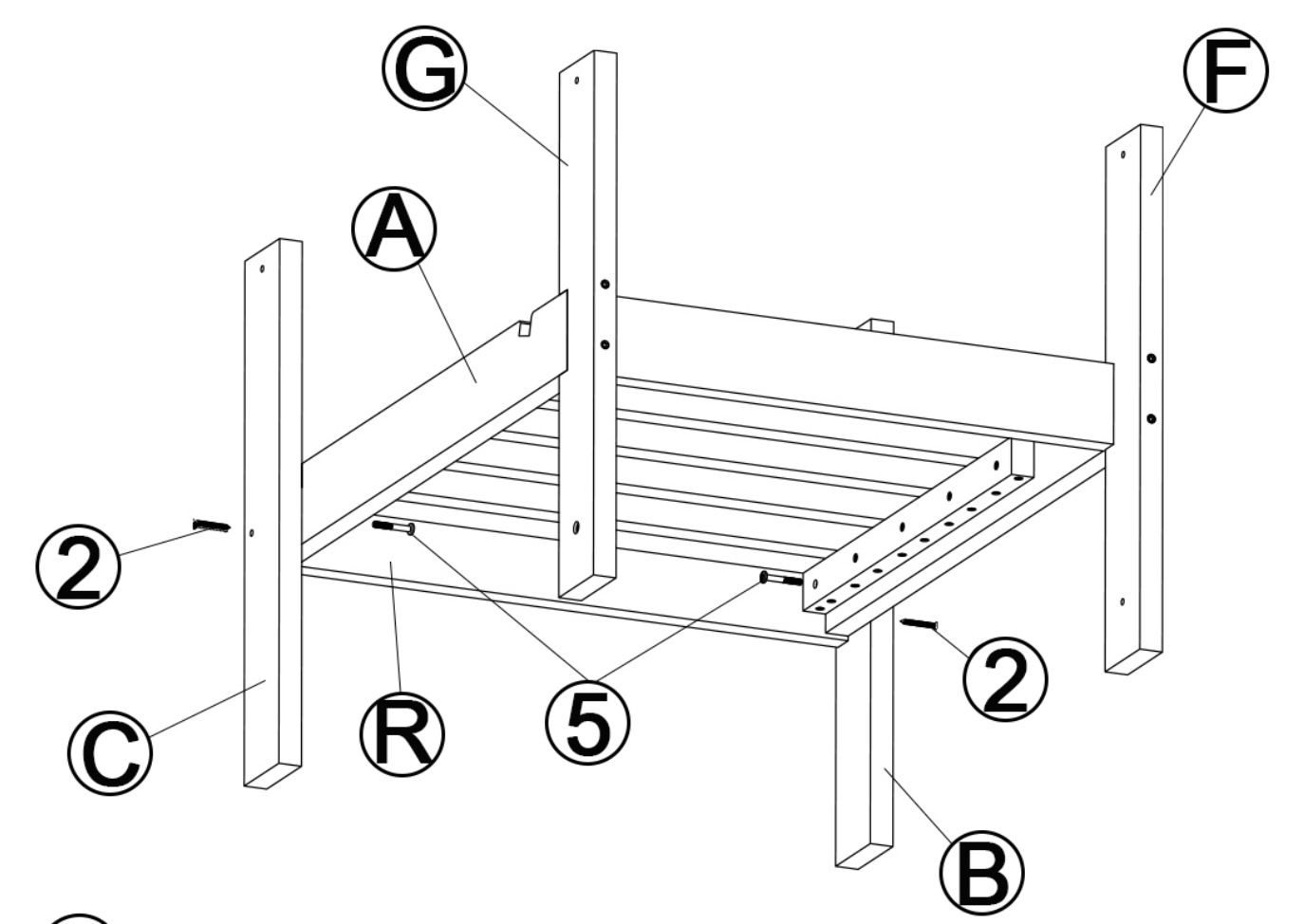

② x 2
⑤ x 2

STEP2

- ●Attach "Seat Frame of Single Chair (A)" to "Right Front Leg (B)" and "Left Front Leg (C)" - Using "⑤M6 x 60MM Bolts" ,tighten with hex key.
- ●Attach "Front Leg (B/C)" to "Seat Front Panel (R)" - Using "②M6 x 60MM Screws" ,tighten with hex key.

Assembly Instructions

If you need help or have damaged or missing parts, please email: **poly@homeselecting.com**

⚠ Caution: Please do not over-tighten bolts and screws during assembly.

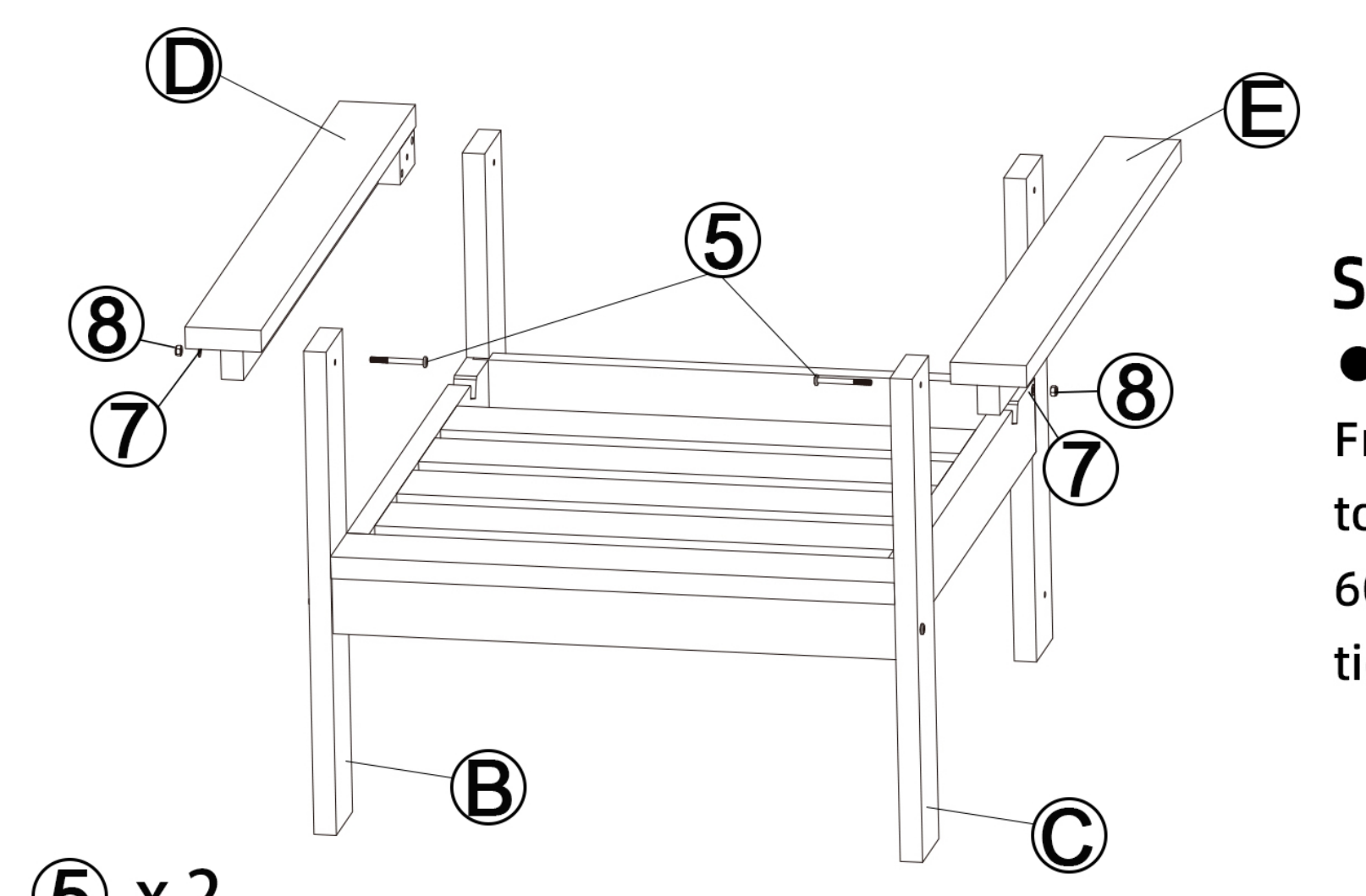

⑤ x 2
⑦ x 2
⑧ x 2

STEP3

- ●Attach "Right Armrest (D)" to "Right Front Leg (B)" and attach "Left Armrest (E)" to "Left Front Leg (C)" - Using "⑤M6 x 60MM Bolts" with "⑦Washer" and "⑧Nut" , tighten with hex key and wrench.

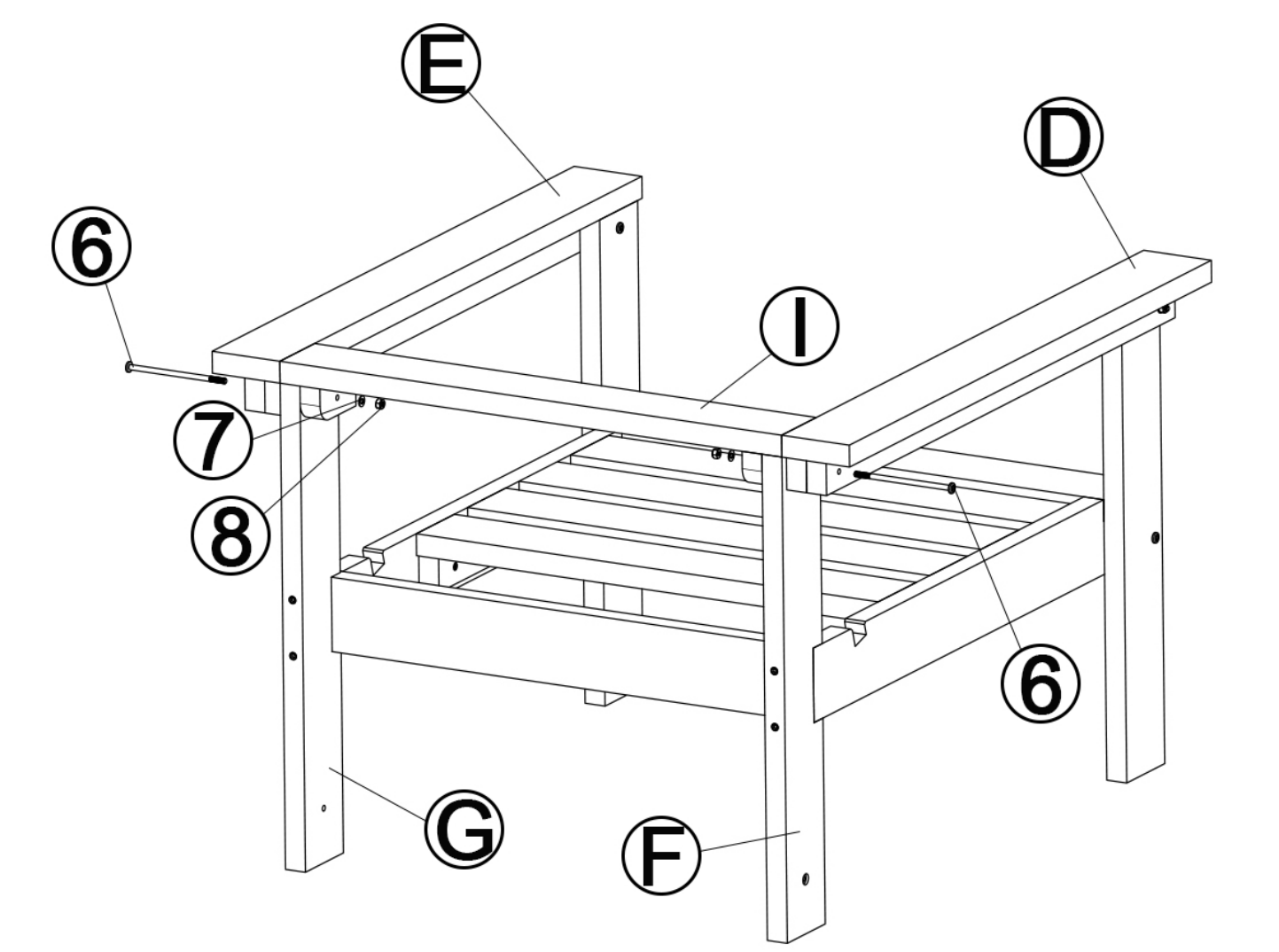

⑥ x 2
⑦ x 2
⑧ x 2

STEP4

- ●Attach "Rear Leg Upper Rail (I)" to "Right Rear Leg (F)" and "Right Armrest (D)" - Using "⑥M6 x 110MM Bolts" with "⑦Washer" and "⑧Nut" , tighten with hex key and wrench.
- ●Attach "Rear Leg Upper Rail (I)" to "Left Rear Leg (G)" and "Left Armrest (E)" - Using "⑥M6 x 110MM Bolts" with "⑦Washer" and "⑧Nut" , tighten with hex key and wrench.

Assembly Instructions

If you need help or have damaged or missing parts, please email: **poly@homeselecting.com**

⚠ Caution: Please do not over-tighten bolts and screws during assembly.

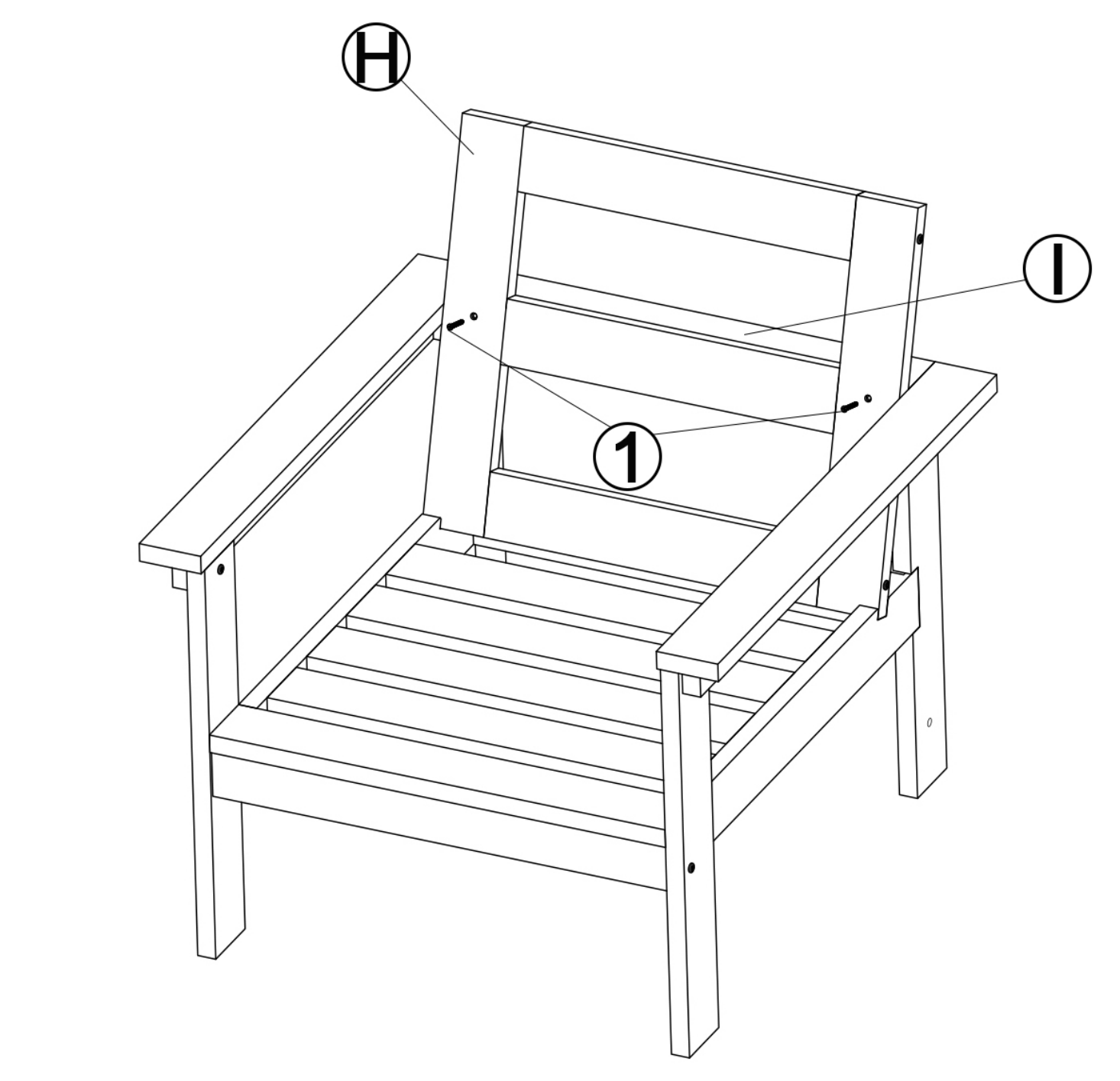

① x 2

STEP5

- ●Attach "Backrest (H)" to "Rear Leg Upper Rail (I)" - Using "①M5 x 50MM Screws" ,tighten with hex key.

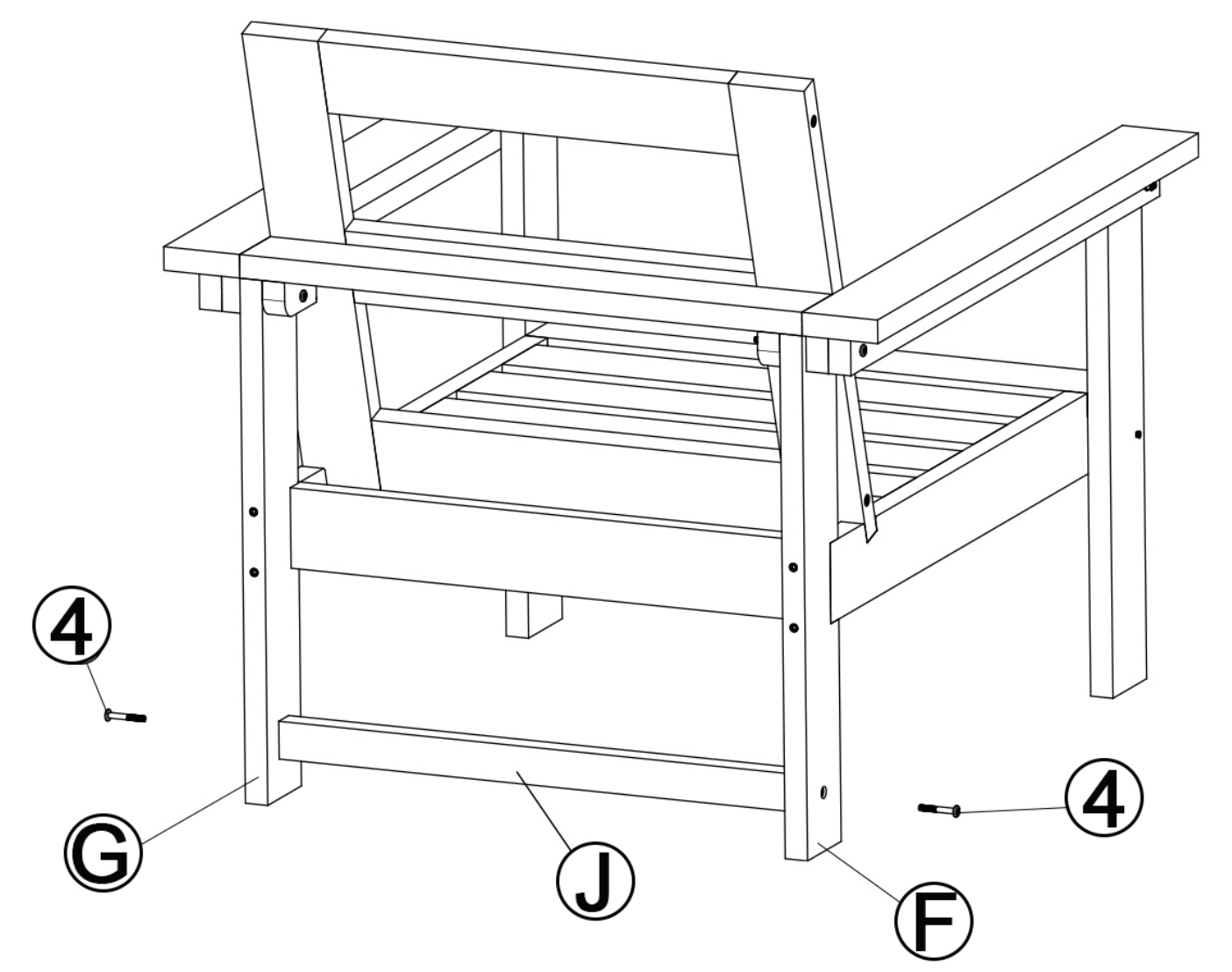

④ x 2

STEP6

- ●Attach "Rear Leg Bottom Rail (J)" to "Rear Leg (F/G)" - Using "④M6 x 40MM Bolts" ,tighten with hex key.

Warnings

If you need help or have damaged or missing parts, please email: **poly@homeselecting.com**

Important - Please read these instructions fully before starting assembly

Check you have all the components and tools listed on the page 2.

Remove all fittings from the plastic bags and separate them into their groups.

Keep children and animals away from the work area, small parts may cause choking if swallowed.

Make sure you have enough space to layout the parts before starting.

Assemble on a soft level surface to avoid damaging the unit or your floor.

Do not stand or put weight on the product, this could cause damage.

Assemble the item as close to its final position (in the same area) as possible.

Do not place furniture directly in front of radiators, fires, or any other source of heat.

The assembly will be easier with 2 people while 1 person could also do the job.

Refer to the LISTING page for specific installation videos.

Cleaning & Maintenance

- ●Clean the product with a solution of mild soap and water. Dip a soft cloth or sponge into the solution and wipe down the entire surface.
- ●After cleaning, thoroughly rinse the furniture with water to remove any remaining soap residue.
- ●When not in use, cover the product with a protective cover to keep it clean and prolong its lifespan.