Assembly Instructions

SKU:KHD-MX-NS19-RBN

Lot NO.:MX-NO.1

Before You Start

⚠ Most of the board parts are Labeled. Have a check to make sure all parts are included.

⚠ Keep the handtools close at hand. Do not use power tools to assemble your furniture as they may scratch or damage the parts.

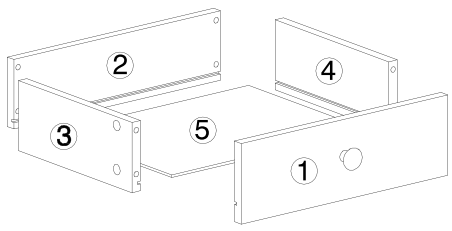

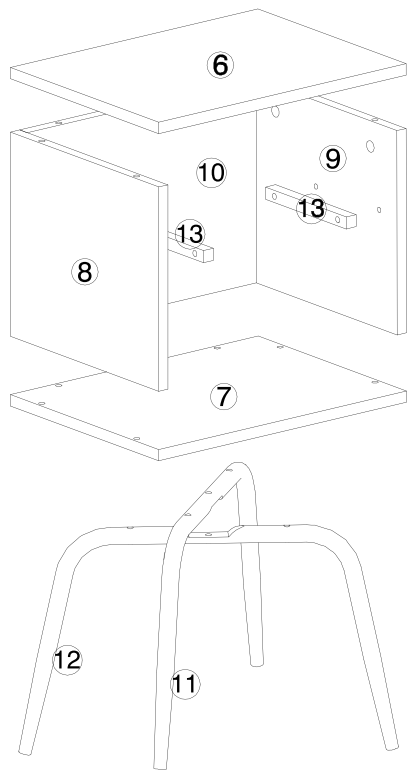

Parts List

1 — 367*117mm — 1PCS	2 — 367*101mm — 1PCS
3 — 253*102mm — 1PCS	4 — 253*102mm — 1PCS
5 — 346*262mm — 1PCS	6 — 400*300mm — 1PCS
7 — 400*300mm — 1PCS	8 — 300*270mm — 1PCS
9 — 300*270mm — 1PCS	10 — 370*270mm — 1PCS
11 — 1PCS	12 — 1PCS
13 — 2PCS	

A — 8pcs	B — 4pcs	C — Ø7*48mm — 8pcs	D — M6*25mm — 4pcs	E — M6*30mm — 5pcs	F — 2pcs
G — M4*18mm — 1pcs	H — 1pcs	I — 1pcs	J — 1pcs		

Return Policy

VECELO believes you will absolutely love your new item. But if for some reason you want to return it, please contact us directly before you decide to return your product. Our customer service organization can answer most concerns and assist you with any questions you may have about your new item. Please email us first at: support@vecelo.com.

The item must be returned within 30 days or delivery for a full refund. The item must be returned in good condition, in original box, with all original proof of purchase, parts and accessories.

Trouble shooting:

Missing parts
→ Send email with your question to support@vecelo.com
→ Resend within 24 hours
→ Issue resolved

Other issues
→ Send email with your question to support@vecelo.com
→ Respond within 24 hours
→ Issue resolved

We control manufacturing and distribution ourselves to ensure the quality.

"A" Hardware installation example

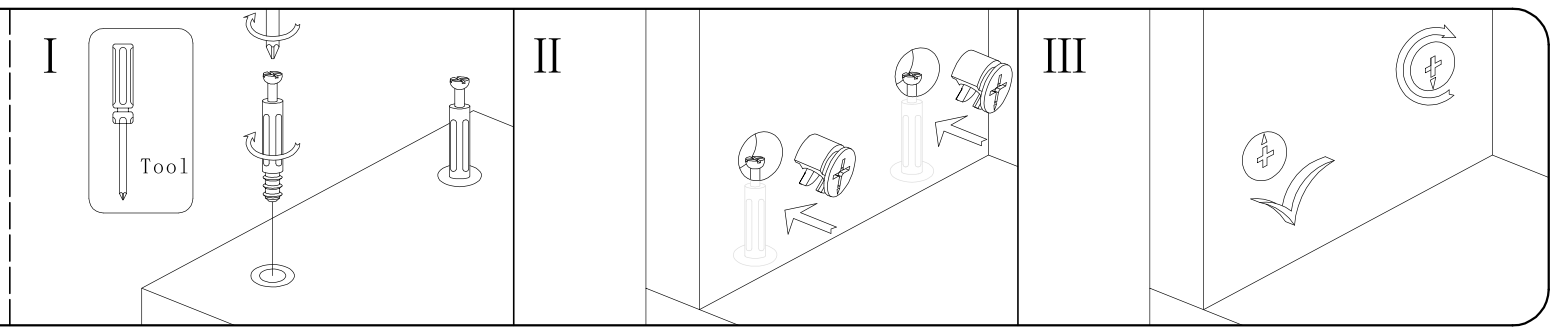

C x4

1 Drawer Assembly

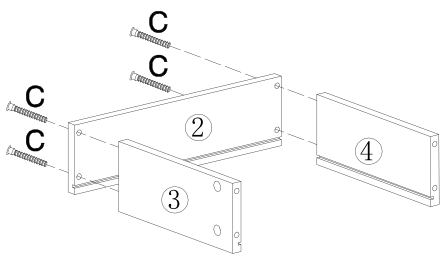

2

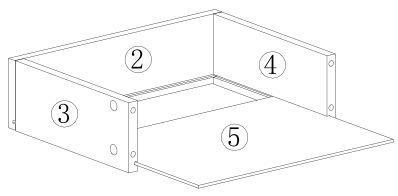

A x4

3

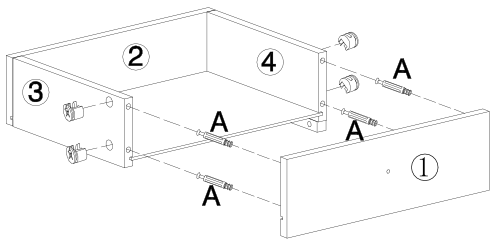

G x1

H x1

4

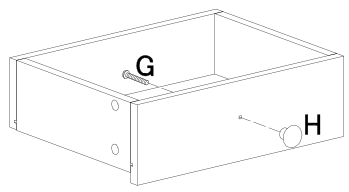

F x2

I x1

5 Body Assembly

Tips:
When in stall H, please notice the direction of a and b

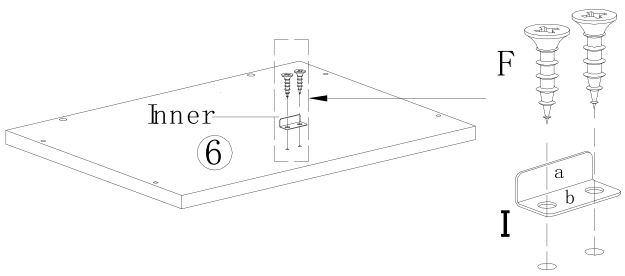

A x4

B x2

6

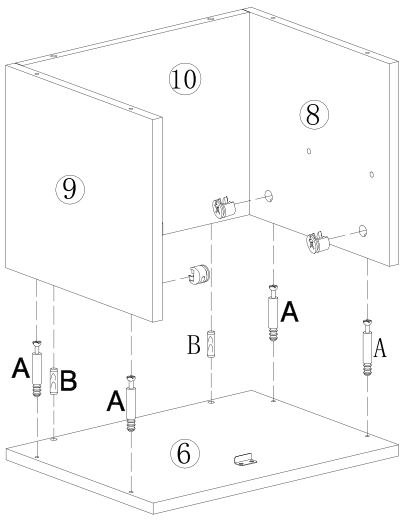

7

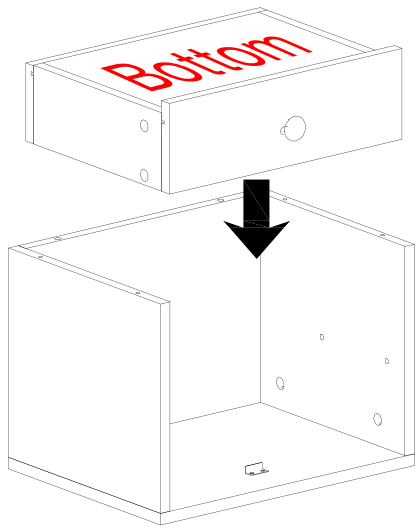

D x4

8

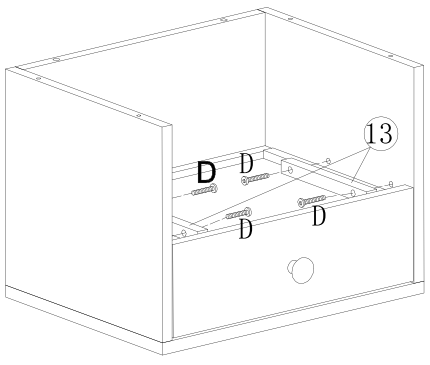

B x2

C x4

9

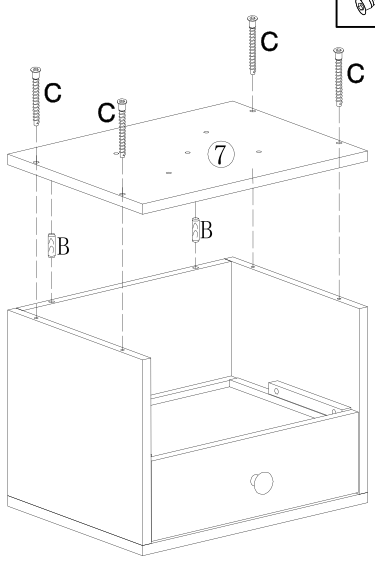

E x5

10 Legs Assembly

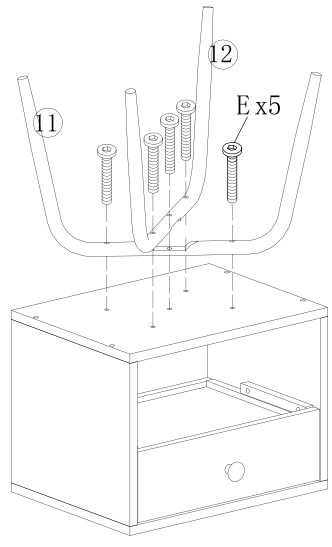

Care and Maintenance

- It is best to keep your furniture in a climate-controlled environment.
- Extreme temperature and humidity changes can cause fading,warping, shrinking and splitting of wood.
- It is advised to keep furniture away from direct sunlight as sun may damage the proper care and cleaning at home will extend the life of your purchase.
- Following these important and helpful tips will enhance your furniture as it ages.