ASSEMBLY INSTRUCTION FOR ITEM C8539KUB

We believe you will absolutely love your new furniture. Please immediately examine this product carefully. Any request for missing part or damage replacement must be received within 90 days of your receipt of the product. For some reason you want to return the product, please contact us directly before you decide to return your product to the retailer. Our Customer Service team can answer most concerns and can assist you with any questions you may have about your new product.

Please contact us first by emailing service@casepiece.com

Have these ready when you email:

- **Item Number**
- **PO #**
- **Purchaser Name**
- **Proof of Purchase**
- **Description of the problem and/or the Part Number needed**

Replacements for missing or damaged parts or hardware are normally shipped within 3 to 5 business days and we thank you for your patient.

The item must be returned in good condition, in original box, with all original proof of purchase, parts and accessories, within the time frame specified by the retailer it was purchased from.

90-Day Limited Warranty Statement for Manufacturing Defects

Please read this Limited Warranty carefully. To maintain your Warranty, you will need to comply with the conditions stated here. This warranty is for manufacturing defects only and does not cover damages as a result of misuse.

1. Our products sold comply with the description contained in this Warranty. All parts and products are warranted 90-Day from the original date of delivery except: parts and products used for commercial, contract, rental trade, institutional, or any other non-residential purposes; parts and products that have not been maintained in accordance with the care recommendations provided; parts and products damaged resulting from the consumer's improper assembly; or parts and products that are damaged or defective due to normal wear and tear.

2. To exercise rights under this warranty, proper documentation, i.e., photography, purchase order number, manufacturer's bar code label, and or any other pertinent information upon request is required. We reserve the right to repair or replace the product within the warranty period based upon the documentation received as support of a claim for consideration. We will not replace or repair any product if improper maintenance, improper handling, or improper use caused the damage. Any product sold from or modified by a Non-Authorized Dealer, Seller or Consumer will void the Warranty.

3. Cost of packaging and shipping to and from us is not covered by the warranty unless expressly arranged by us. This warranty does not extend to furniture that has been exchanged or replaced by us as settlement of an original claim of defective merchandise. This warranty does not extend to furniture that has been moved from delivery location on original purchase order.

We appreciate your business!

ASSEMBLY INSTRUCTION

ITEM : C8539KUB

PARTLIST

1 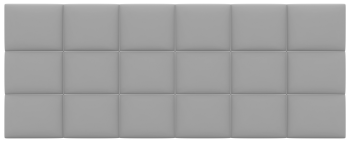 HEADBOARD CUSHION x1	2 HEADBOARD LEG WITH LABEL "R" x1	3 HEADBOARD LEG WITH LABEL "L" x1	4 FOOTBOARD CUSHION x1
5 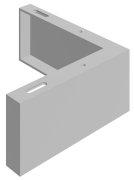 FOOTBOARD LEG x2	6 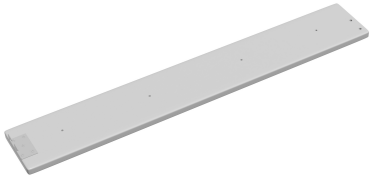 SIDE RAIL (L/R) x2	7 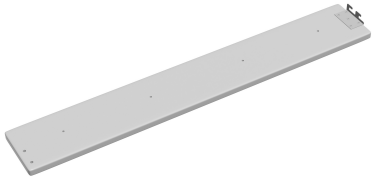 SIDE RAIL (L/R) x2	8 SIDE RAIL LEG x2
9 SLAT x4	10 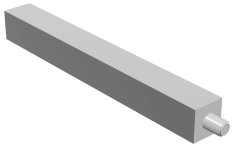 SUPPORT LEG WITH HANGER BOLT x8	11 SIDE RAIL SUPPORT x4	

ASSEMBLY INSTRUCTION

HARDWARE

A JCBB SCREW M8 x 20MM x8	B JCBC SCREW M6 x 15MM x4	C JCBC SCREW M6 x 35MM x24	D JCBC SCREW M6 x 50MM x6	E SPRING WASHER M6 x 12MM x30
F FLAT WASHER M6 x 19MM x30	G 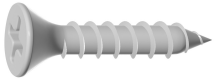 CSK C/B SCREW M4 x 32MM x8	H L - KEY M5 x 65MM x1	I L - KEY M4 x 100MM x1	J 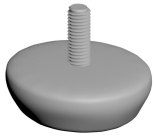 SUPPORT LEG ADJUSTABLE FEET x8

ASSEMBLY INSTRUCTION

STEP 1

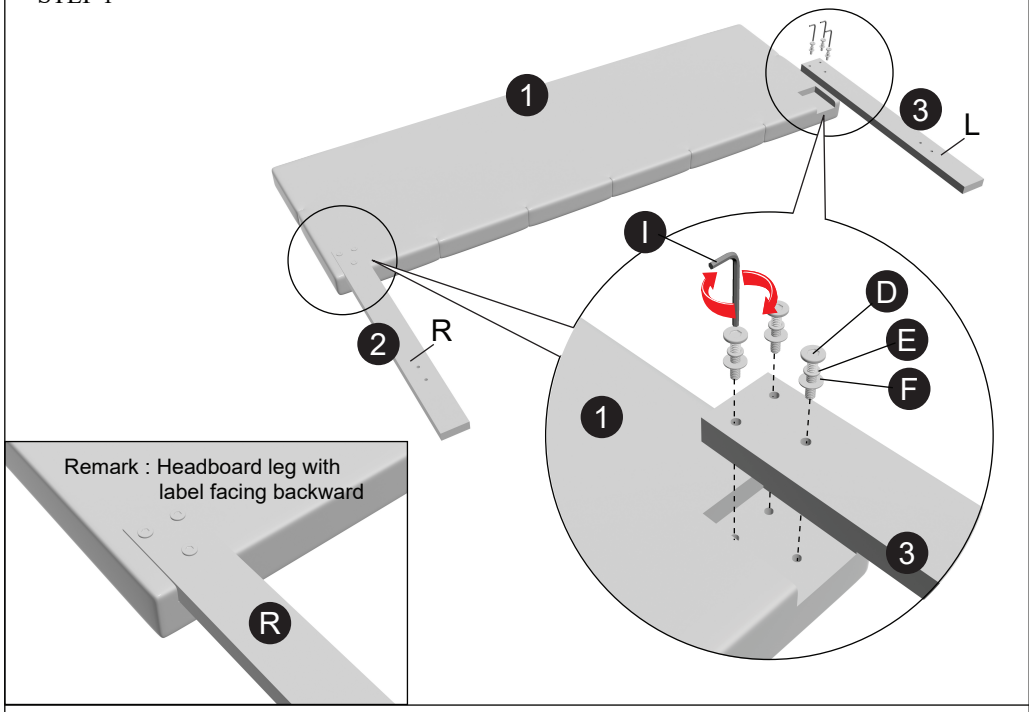

STEP 2

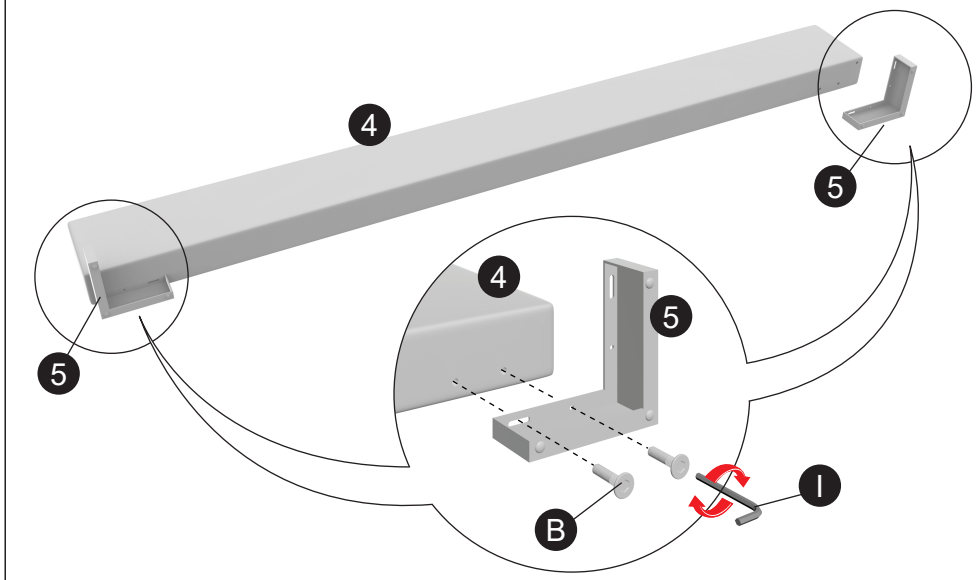

STEP 3

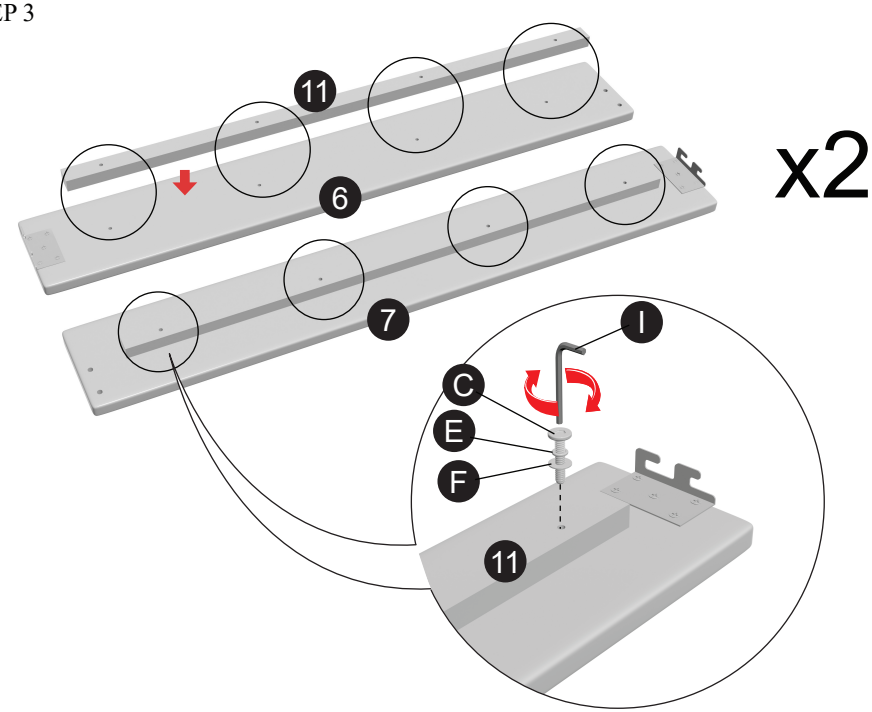

STEP 4

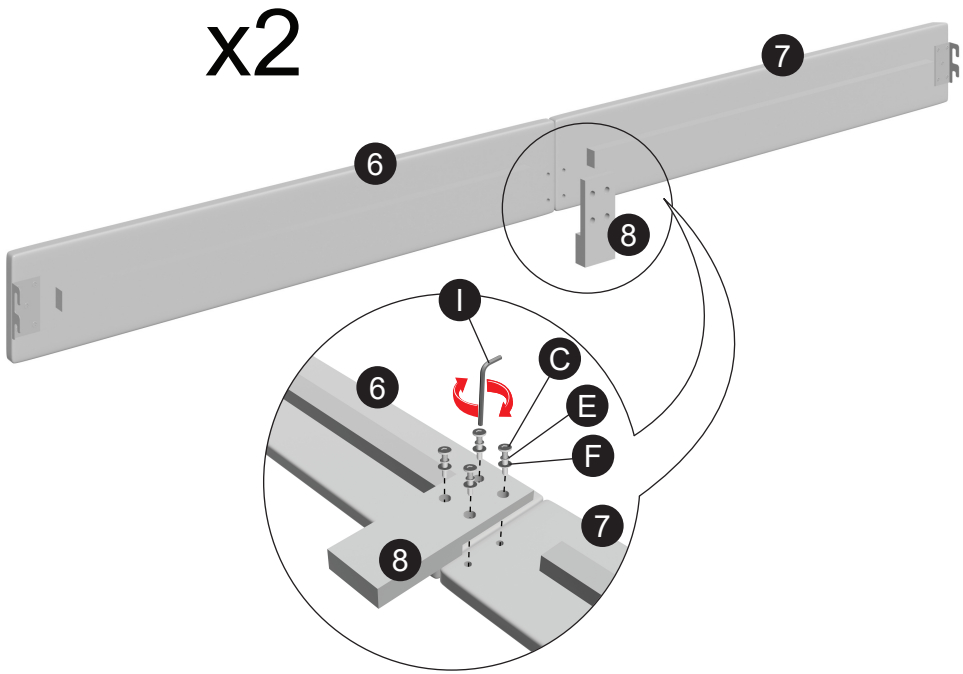

ASSEMBLY INSTRUCTION

STEP 5

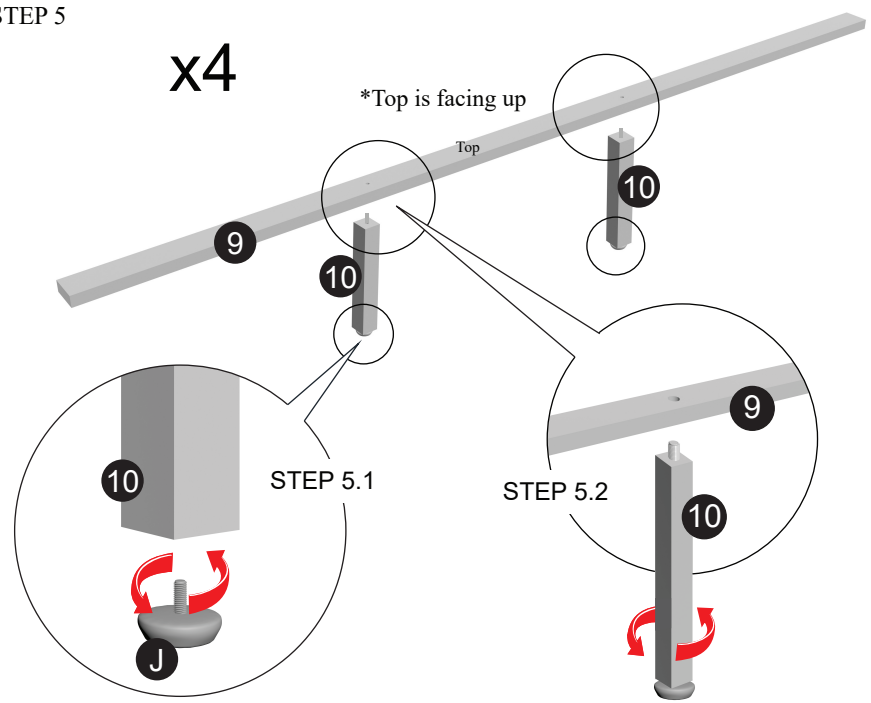

STEP 6

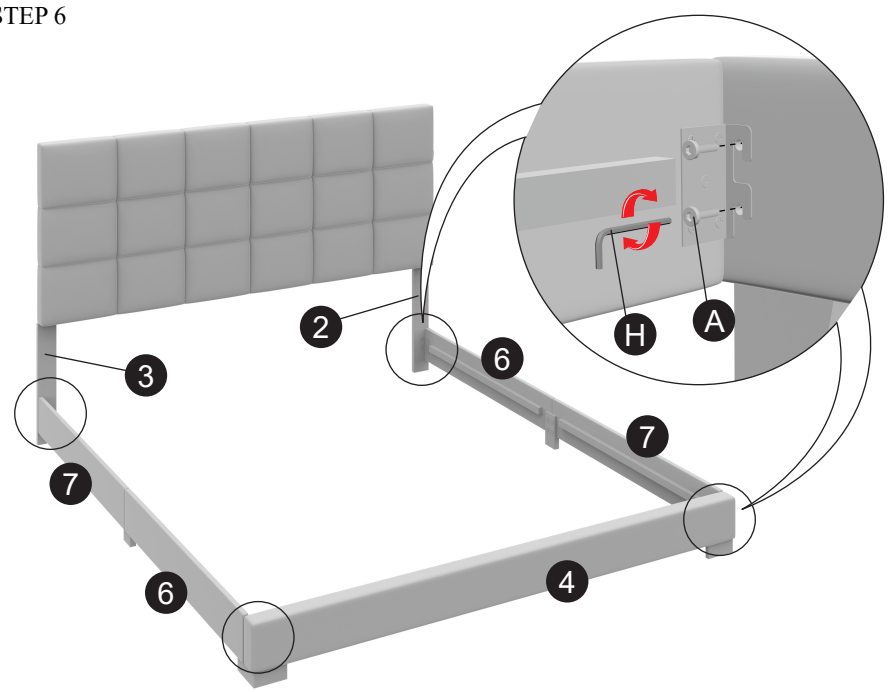

STEP 7

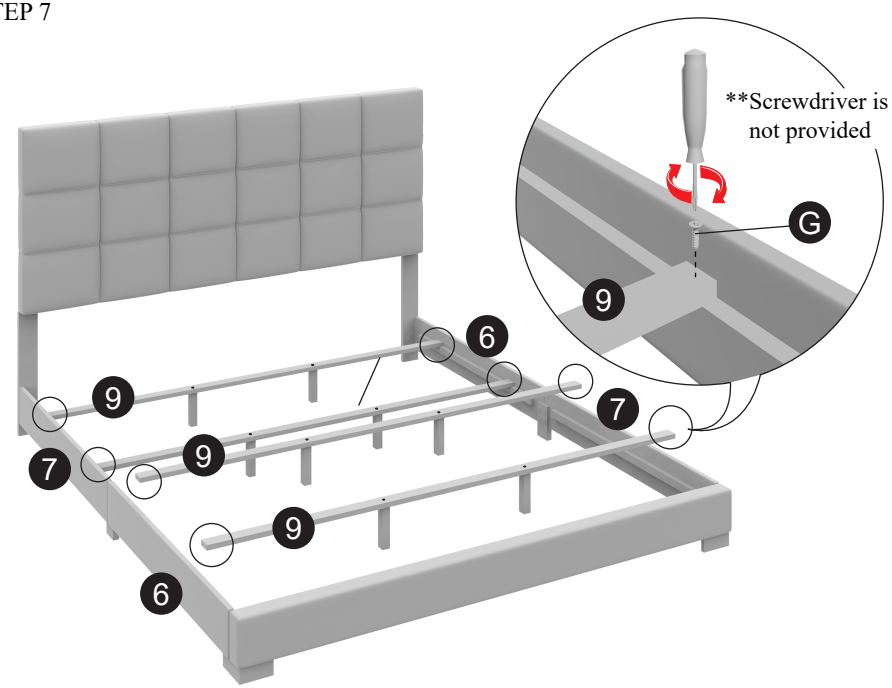

STEP 8

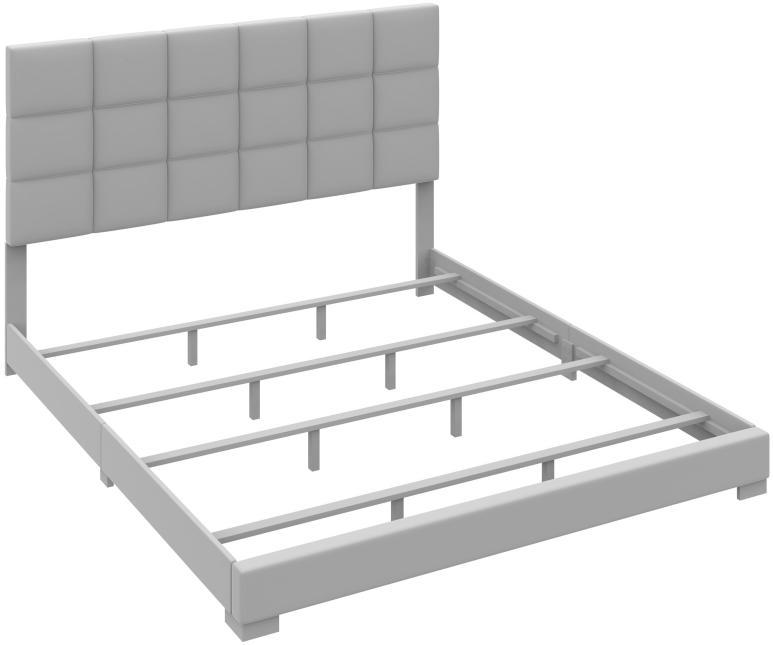

ASSEMBLY INSTRUCTION

STEP 9

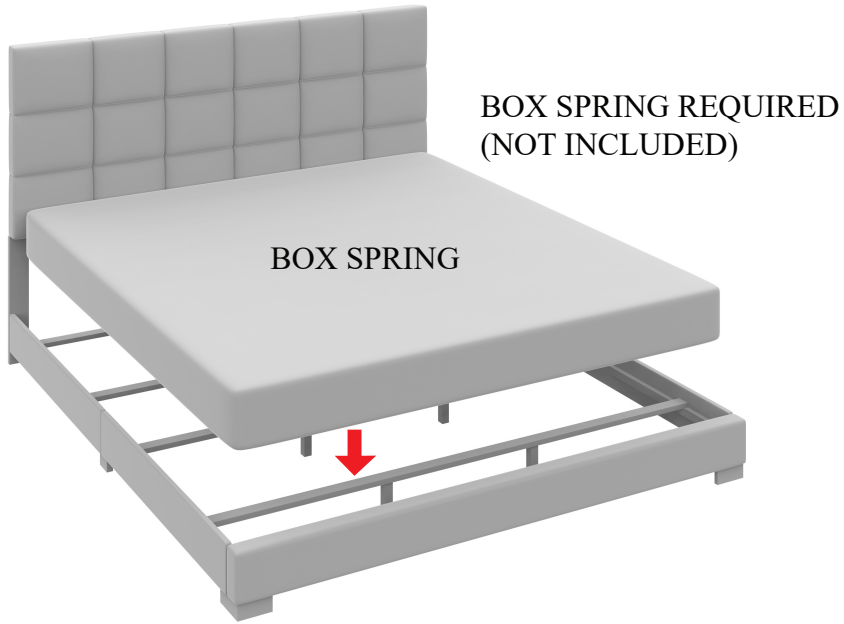

STEP 10

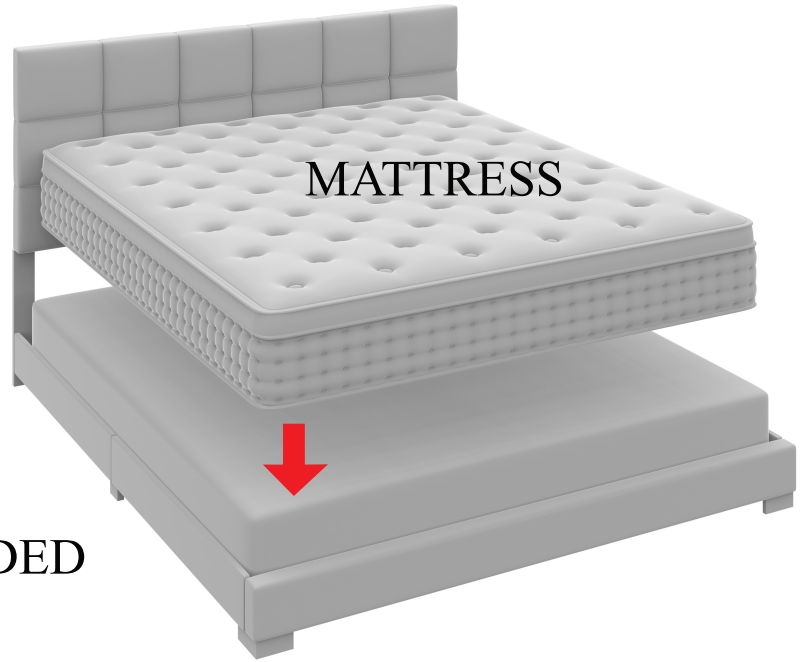

MATTRESS NOT INCLUDED

ASSEMBLY
COMPLETED