ASSEMBLY INSTRUCTION

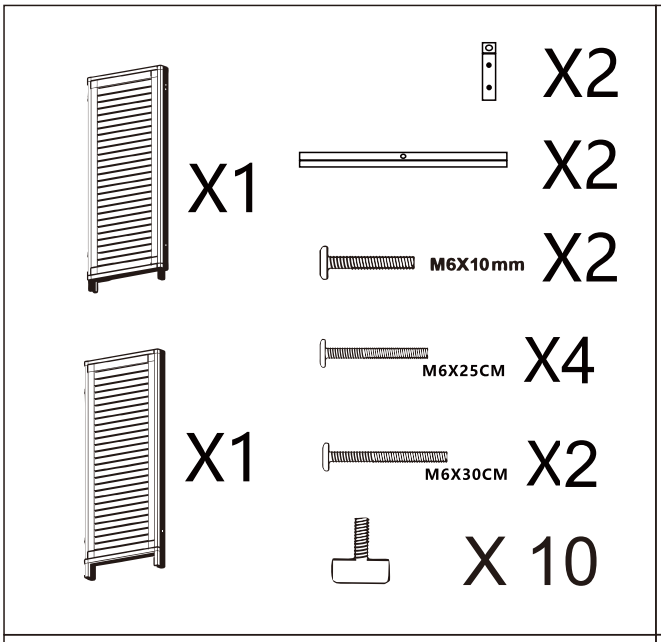

1

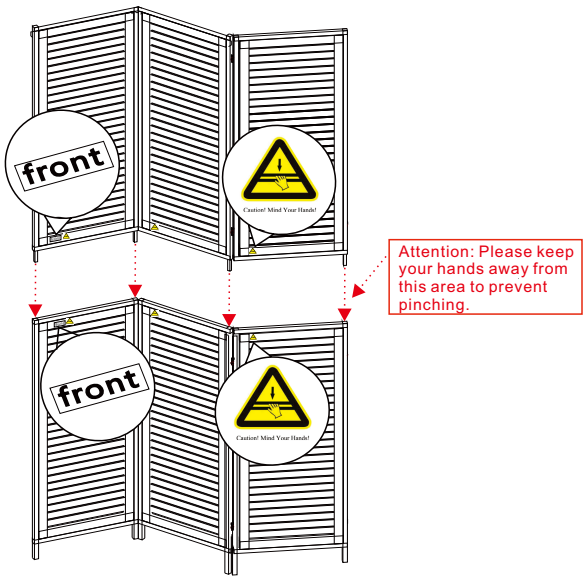

2

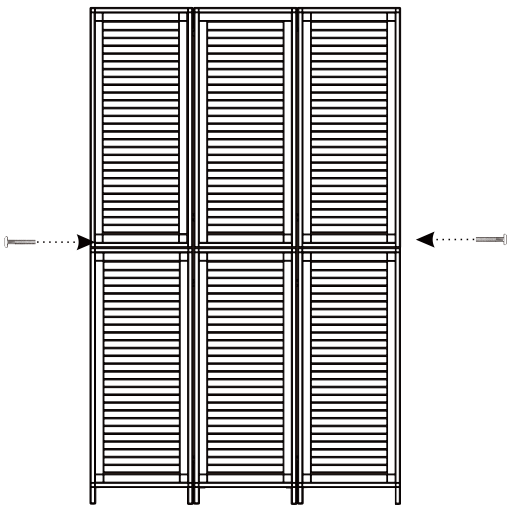

A	M6X10mm	2

3

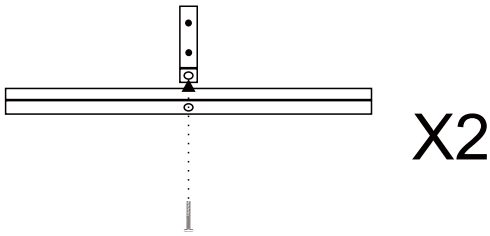

B	M6X30mm	2

4

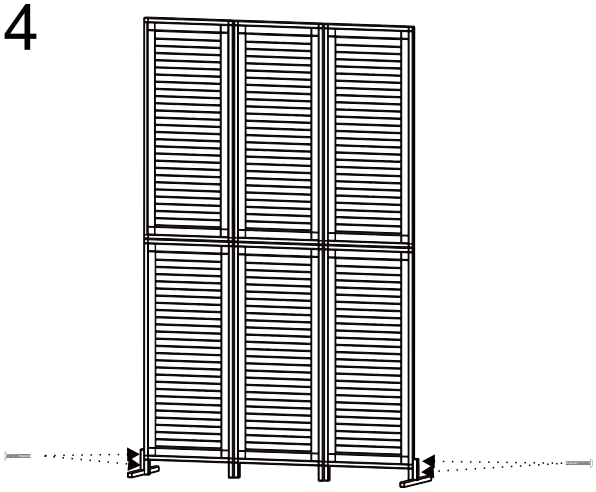

B	M6X25mm	4

5

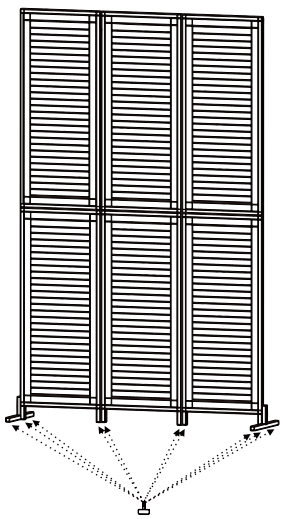

	10