Bathroom Cabinet	Unit	Inch	Model	CVI48
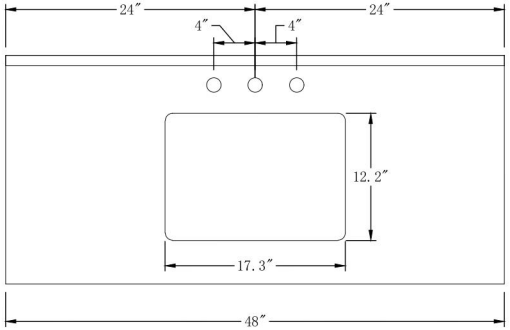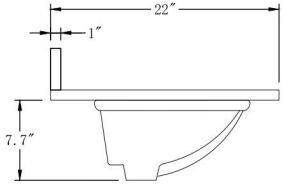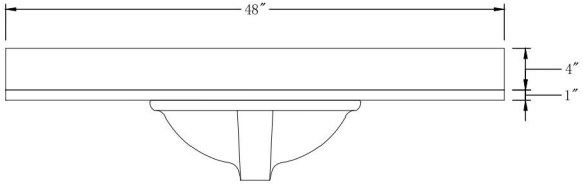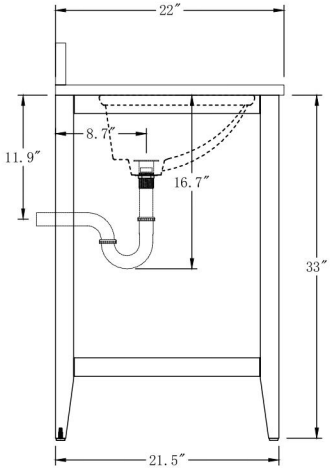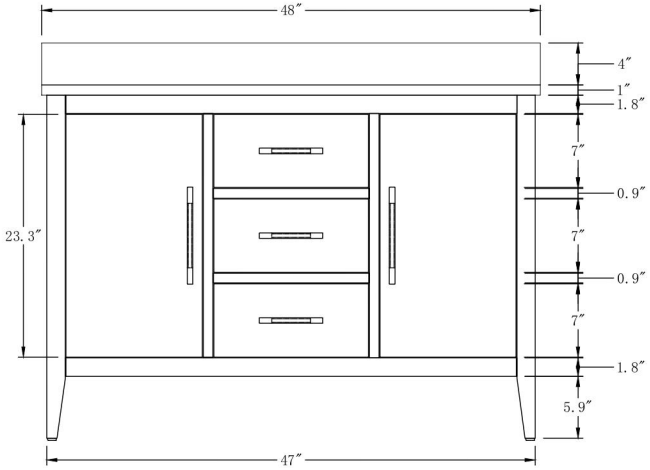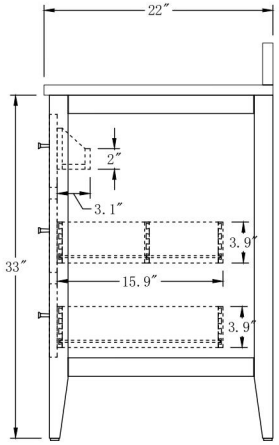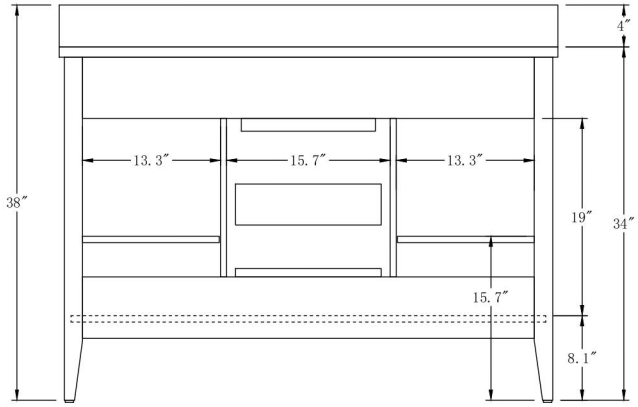
Cabinet:48"x22"x38"
Handle:9.3"Inch, 6.1"Inch