Assembly Instruction

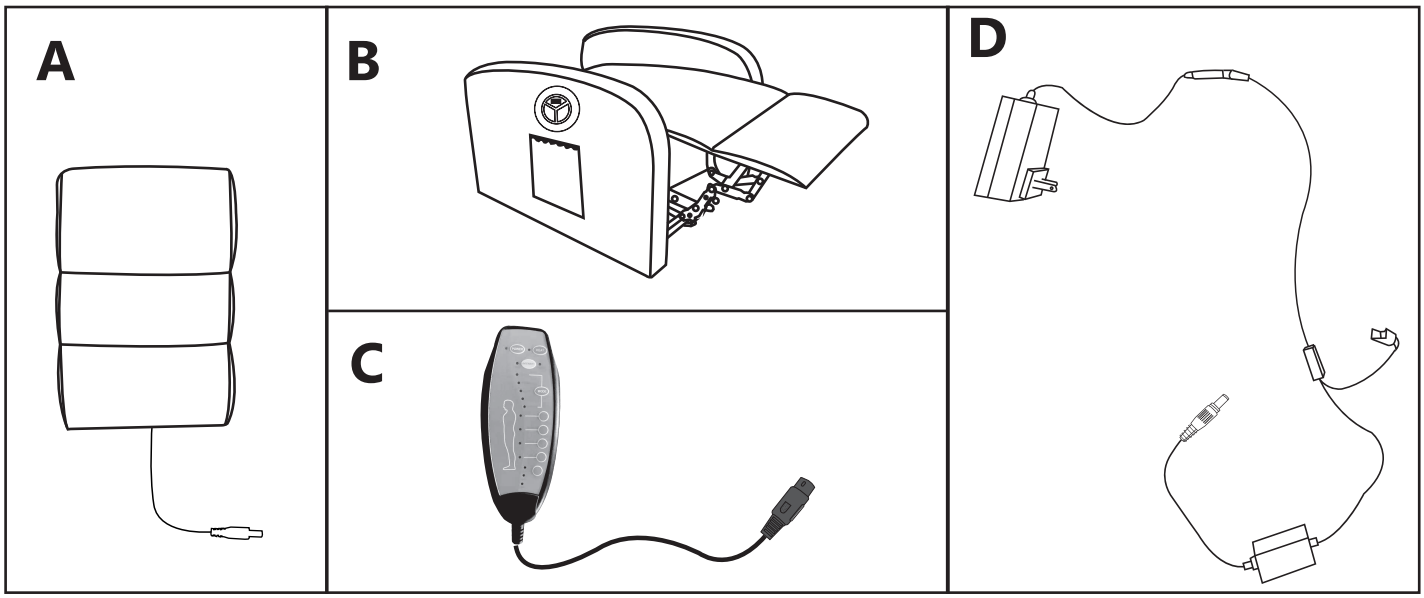

1

INSERT THE BACK ON THE SEAT
GENTLY PUSH DOWN UNTIL THE
BACK LOCKS INTO POSITION
UNTIE THE CORD AT THEBOTTOM
OF THE RECLINER

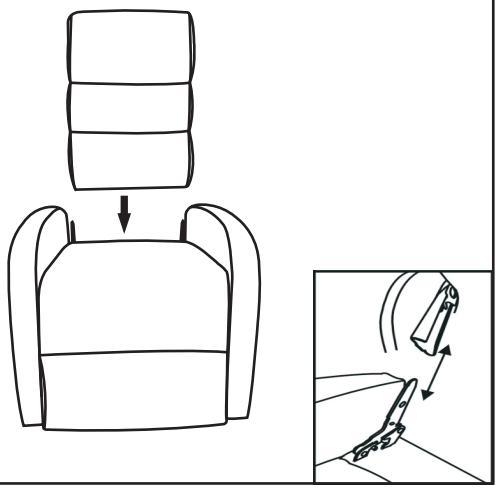

2

THE RECLINER IS FINISHED

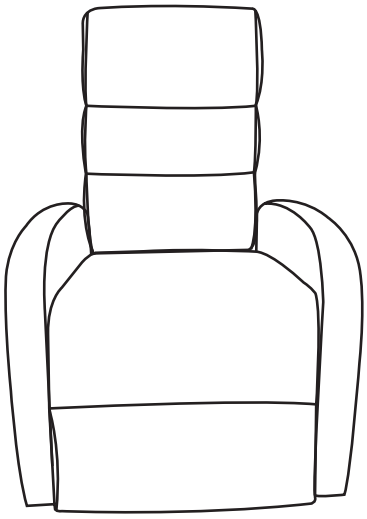

3

CONNECT BACK AND SEAT MASSAGE FUNCTION

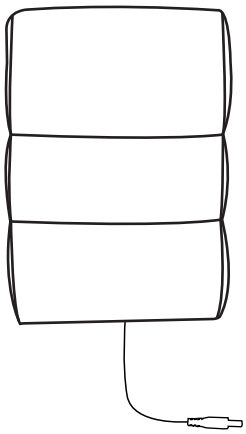

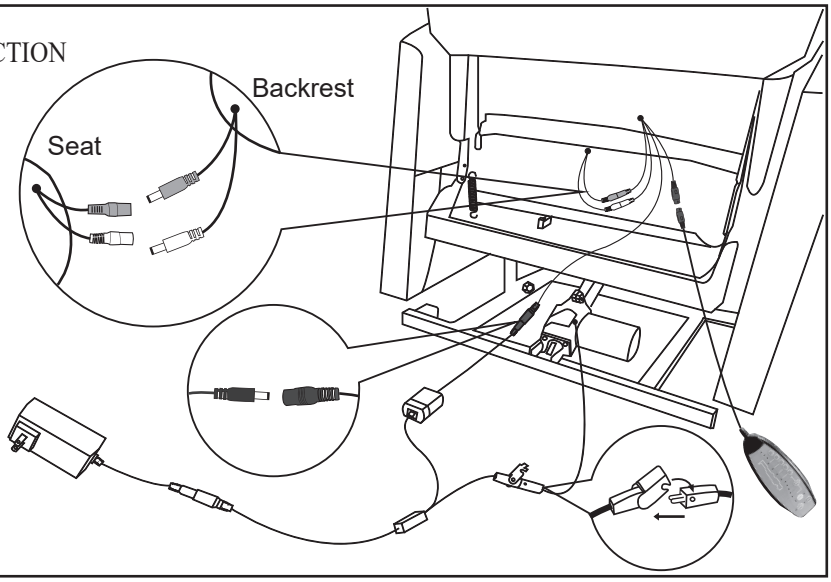

4 USE THE CONTROLLER TO OPEN THE RECLINER

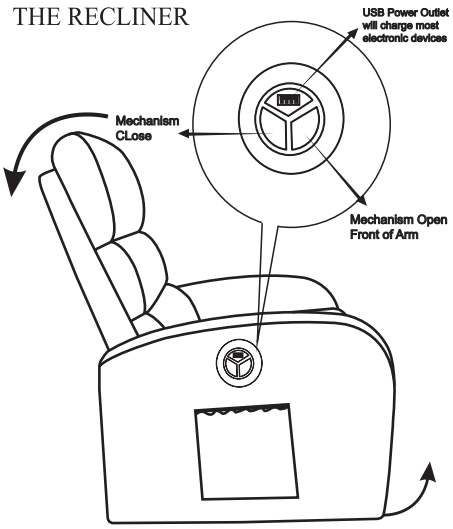

5 USE THE CONTROLLER TO RESUME THE RECLINER TO ORIGINAL POSITION

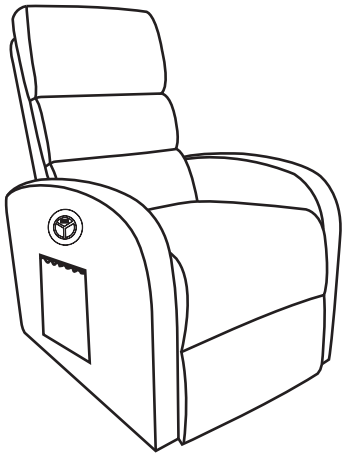

6 USE THE CONTROLLER TO LIFT THE RECLINER UP TO SUPPORT THE PERSON STANDING

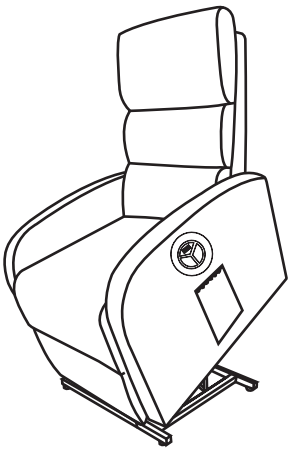

7

MASSAGE CHAIR

REMOTE CONTROL
Function of remote

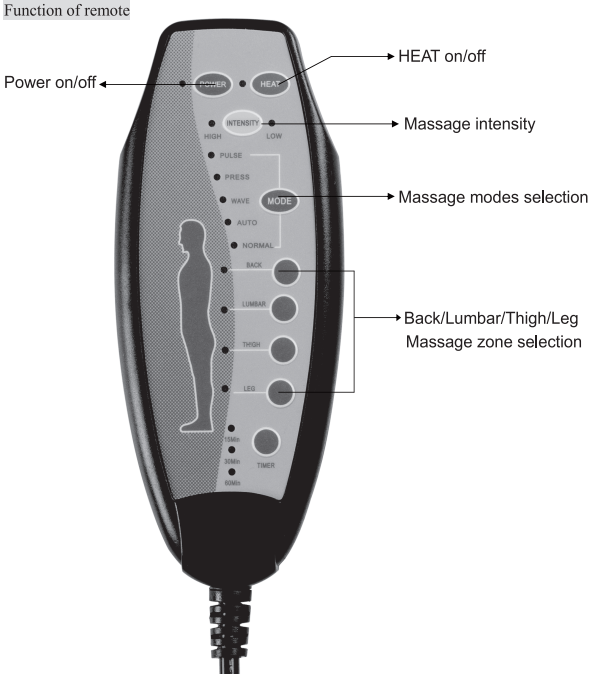

8 USE THE CONTROLLER TO POSITION THE CHAIR TO RECLINE POSITION

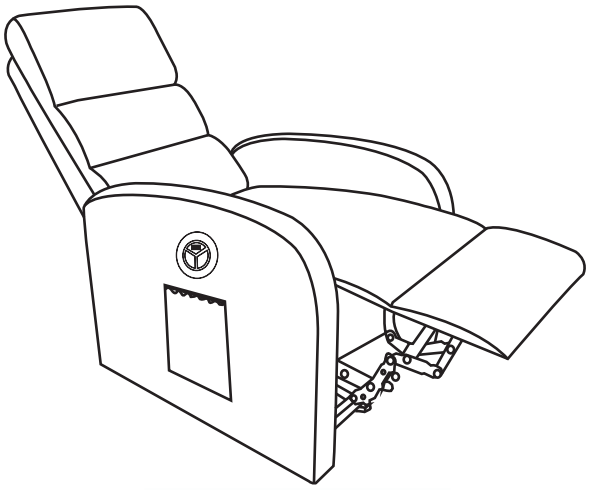

WARNING:

1. DO NOT STAND ON THIS CHAIR, DO NOT USE THIS CHAIR AS A STEP LADDER.

2. USE THIS CHAIR ONLY FOR SEATING ONE PERSON AT A TIME.

3. DO NOT USE THIS CHAIR UNLESS ALL BOLTS, SCREWS AND KNOBS ARE FIRMLY SECURED.

4. CHECK ALL BOLTS SCREWS AND KNOBS ON A REGULAR BASIS.

5. THIS CHAIR SHOULD NOT BE USED WITH DAMAGED OR MISSING PARTS. CONTACT AN AUTHORISED SERVICE PROVIDER TO REPAIR OR REPLACE PARTS DAMAGED OR MISSING.

6. FAILURE TO FOLLOW THESE WARNINGS COULD RESULT IN SERIOUS INJURY.