VINNOVA

ASSEMBLY INSTRUCTIONS

Huesca

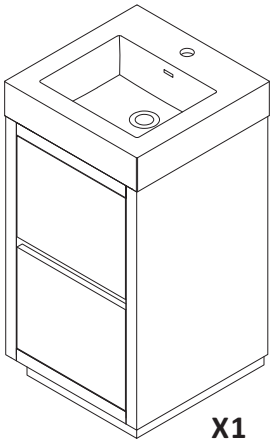

X1

703018

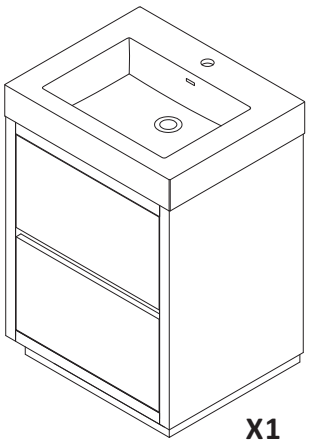

X1

703024

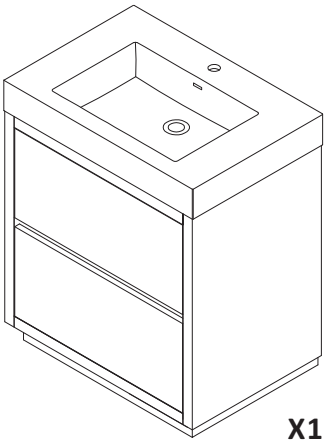

X1

703030

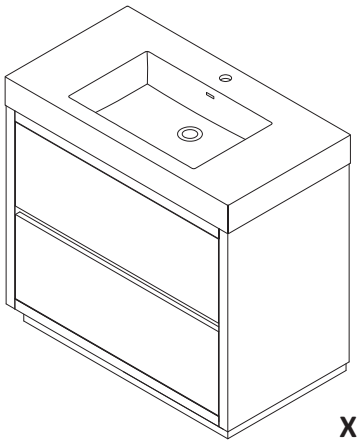

X1

703036

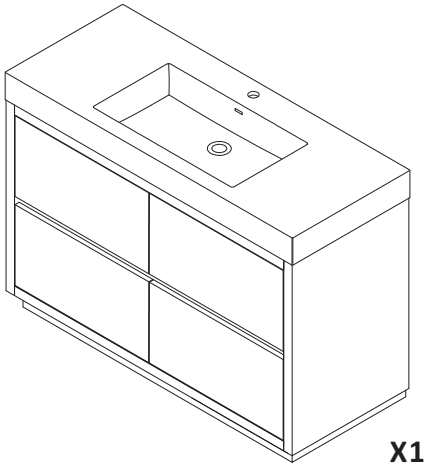

X1

703048

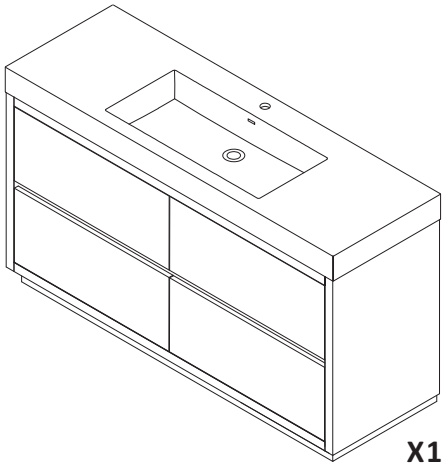

X1

703060

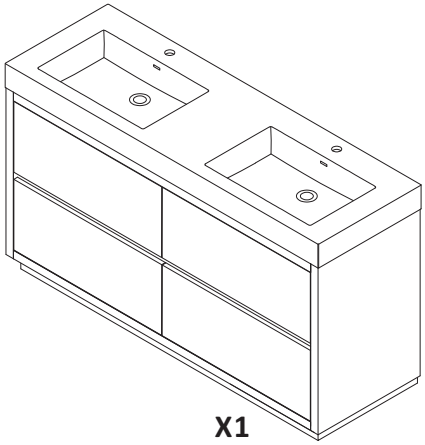

X1

703060M

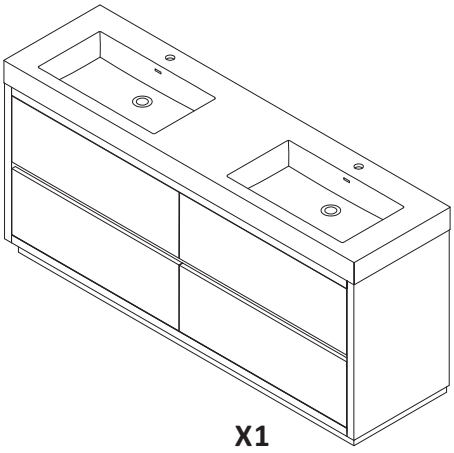

X1

703072

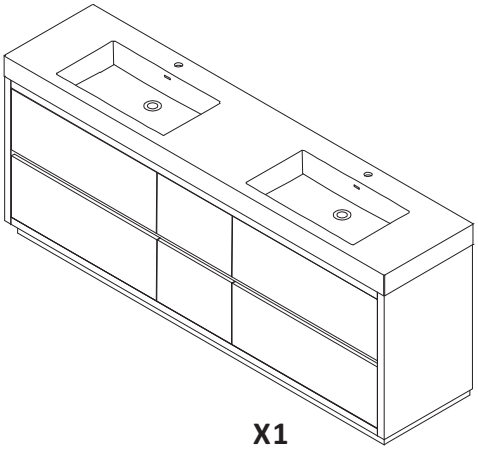

X1

703084

Model:703036
Modèle:703036

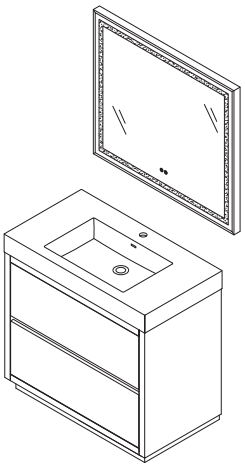

INSTALLING VANITY WITH TWO PEOPLE IS HIGHLY RECOMMENDED
L'INSTALLATION DE LA VANITÉ AVEC DEUX PERSONNES EST FORTEMENT RECOMMANDÉE

Recommended Tools/Outils recommandés

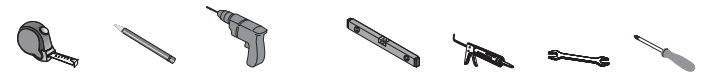

Tape measure | Pencil | Mechanical Screwdriver | Level | Calking Gun | Spanner | Screwdriver

C 6x80 Outer hexagonal self-tapping screws/
6x80 Vis auto-taraudeuses hexagonal externe 2 pcs

Main Body Parts/La partie principale du corps

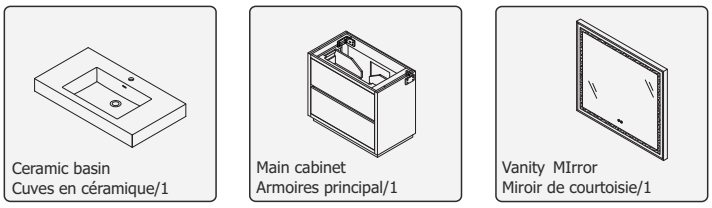

Assembly instructions/Instructions de montage

STEP #1
Mounting cabinet/Installation du cabinet

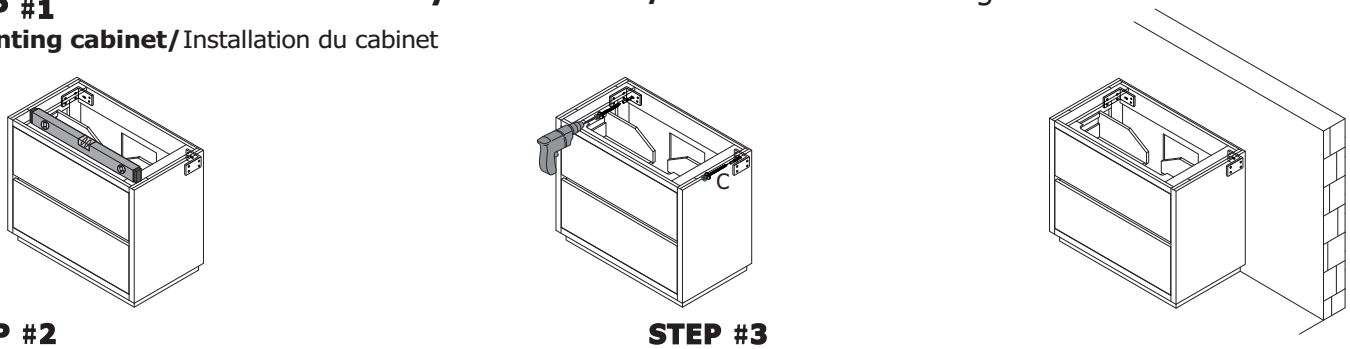

STEP #2
Paste the countertop/Coller le comptoir

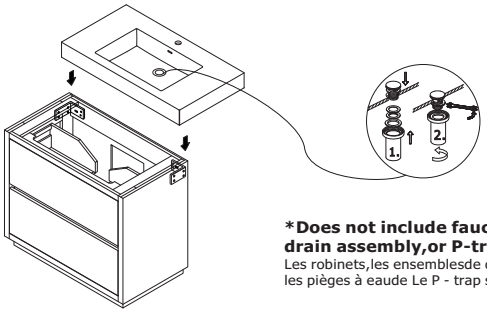

***Does not include faucet, drain assembly,or P-trap/**
Les robinets,les ensemblesde drains ou les pièges à eaude Le P - trap sont pas inclus.

STEP #3
Hang the mirror/Accrocher le miroir

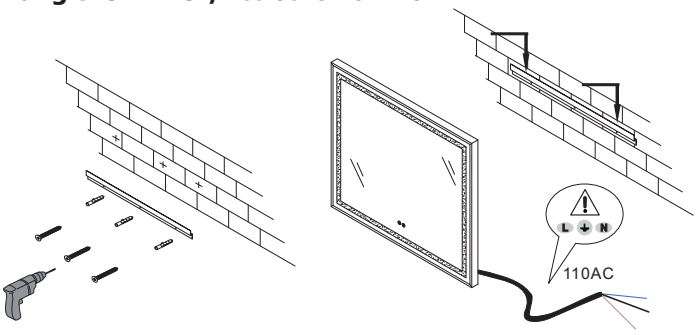

Installation Instruction/Instructions d'installation

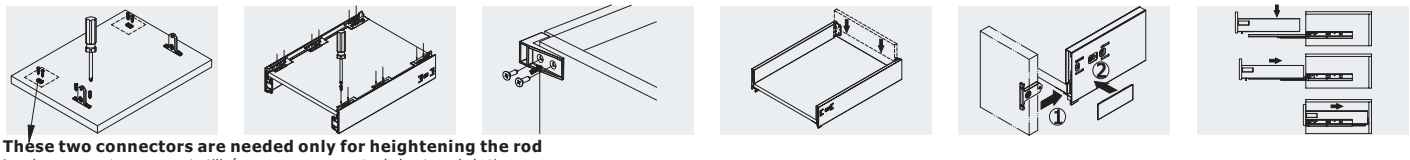

These two connectors are needed only for heightening the rod
Les deux connecteurs ne sont utilisés que pour augmenter la hauteur de la tige

The drawer is adjusted/Le tiroir est réglé

Standard screwdriver shaft diameter: 0.24"/
Diamètre de l'axe du vis standard: 0,24"

Heightening rod installation, adjustment and removal/
Installation, réglage et retrait de la tige de surélévation

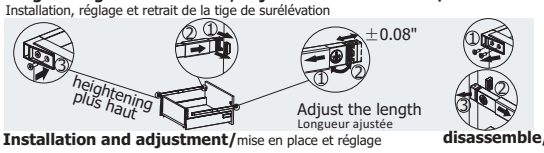

Installation and adjustment/mise en place et réglage **disassemble/**démonter

•Please check your product packaging to make sure the included accessories etc.
Veuillez vérifier l'emballage de votre produit pour vous assurer que les accessoires inclus

Diagram Specifications

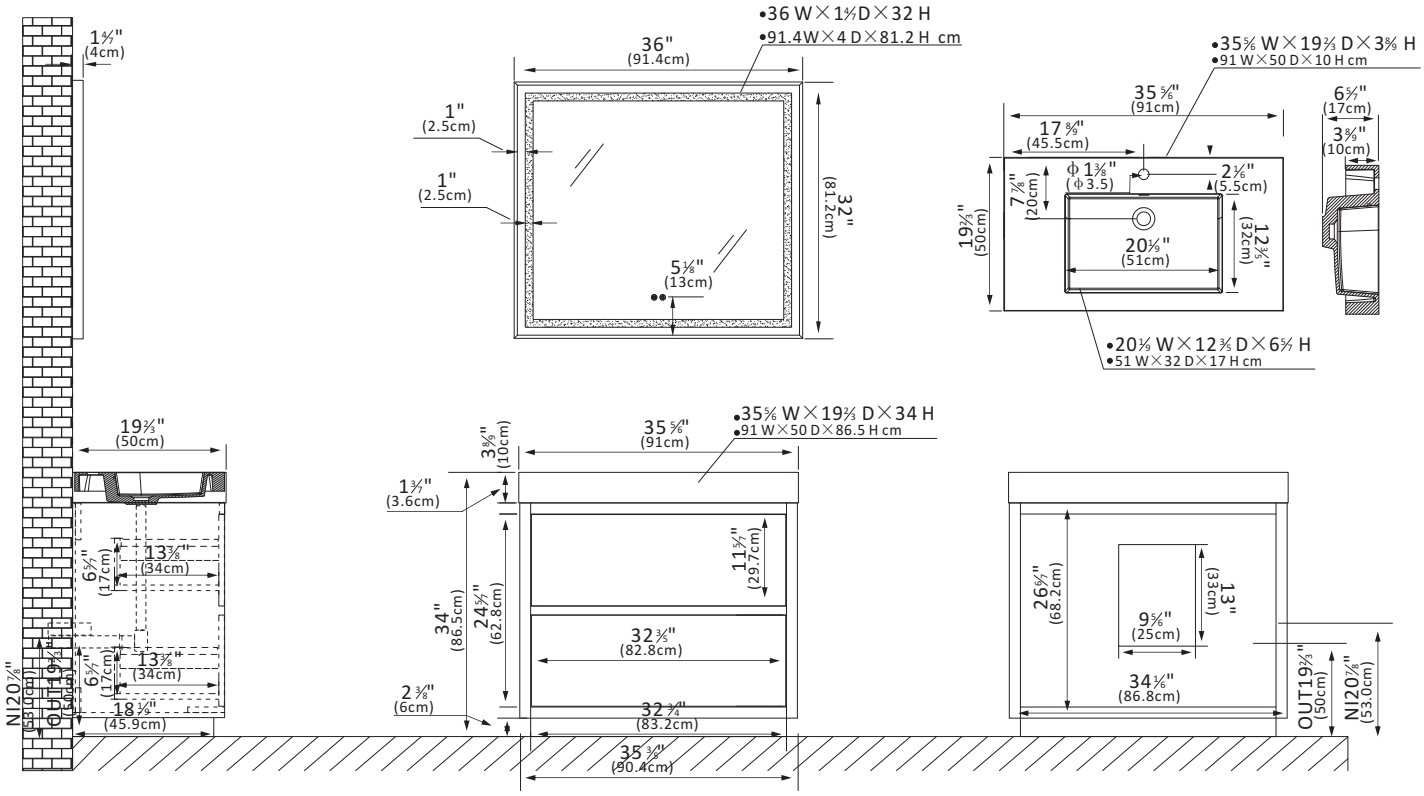

Vanity Care Guide

Vanity Care

- Avoid direct contact of sharp objects as they can cause exterior damage.
- Do not expose directly to the sun as it can cause aging and cosmetic damage.
- Avoid placing hot objects onto the vanity surface.

Countertop Care

- Kindly note that all our tops are sealed before shipping but may stain, scratch, or chip because they are porous by nature.
- Do not place hot items directly on the countertop as it can damage it.
- To prevent ring marks or staining, dry immediately.
- Place table mats beneath objects that can potentially scratch the surface.
- Use a clean, soft fabric to dust the vanity.
- Occasionally wash with a cloth dampened in warm water. If needed, apply a small amount of mild dishwashing liquid or stone soap to clean. Dry with a soft cloth.
- Refrain from using chemical cleaners,sprays,abrasive cleaners, or products that contain lemon, vinegar, or other acids.
- We advise to reseal top annually or when necessary.

For Minimal Stains:

1.Try gently cleaning with water and mild soap with a microfiber cloth.
2.If marks remain:Try gently scraping off the mineral build up with a brand new razor blade.

For Tough Stains or Cloudy Spots:

3.Try a pH-balanced cleaner safe for composite surfaces.
4.If marks remain:

- Lightly buff with water using ultra-fine steel wool (0000 grade) or high-grit waterproof sandpaper(1000+grit).
- Follow with a stone-safe polishing wax to restore shine.
- Always test in a small area first.

Note: These steps should be done gently to avoid dulling the surface. Contact us if a polishing wax is needed.

Cleaning and maintenance

- Avoid using cleaning products that contain Bleach or Ammonia.
- Please use wood-friendly products on wooden base vanities.
- To adequately clean exterior surfaces, use natural cleaning solutions or soap

WARNING

This product can expose you to chemicals including Nickel compounds,which is known to the State of California to cause cancer. For more information visit www. P65Warning. ca. gov

WARNING

This product can expose you to to Glass wool fibers (inhalable and biopersistent), which is known to the State Of California to cause cancer. For more information,go towww. P65Warnings. ca. gov

WARNING

Serious or fatal crushing can occur from furniture tip over . To prevent tip over this furniture must be used with the wall attachment device(s)provided.
Screw(s)and plug(s)for the wall are not included.Use screw(s) And plug(s)suitable for your walls. If you are uncertain,seek professional Advice. Read and follow each step of the instruction carefully.