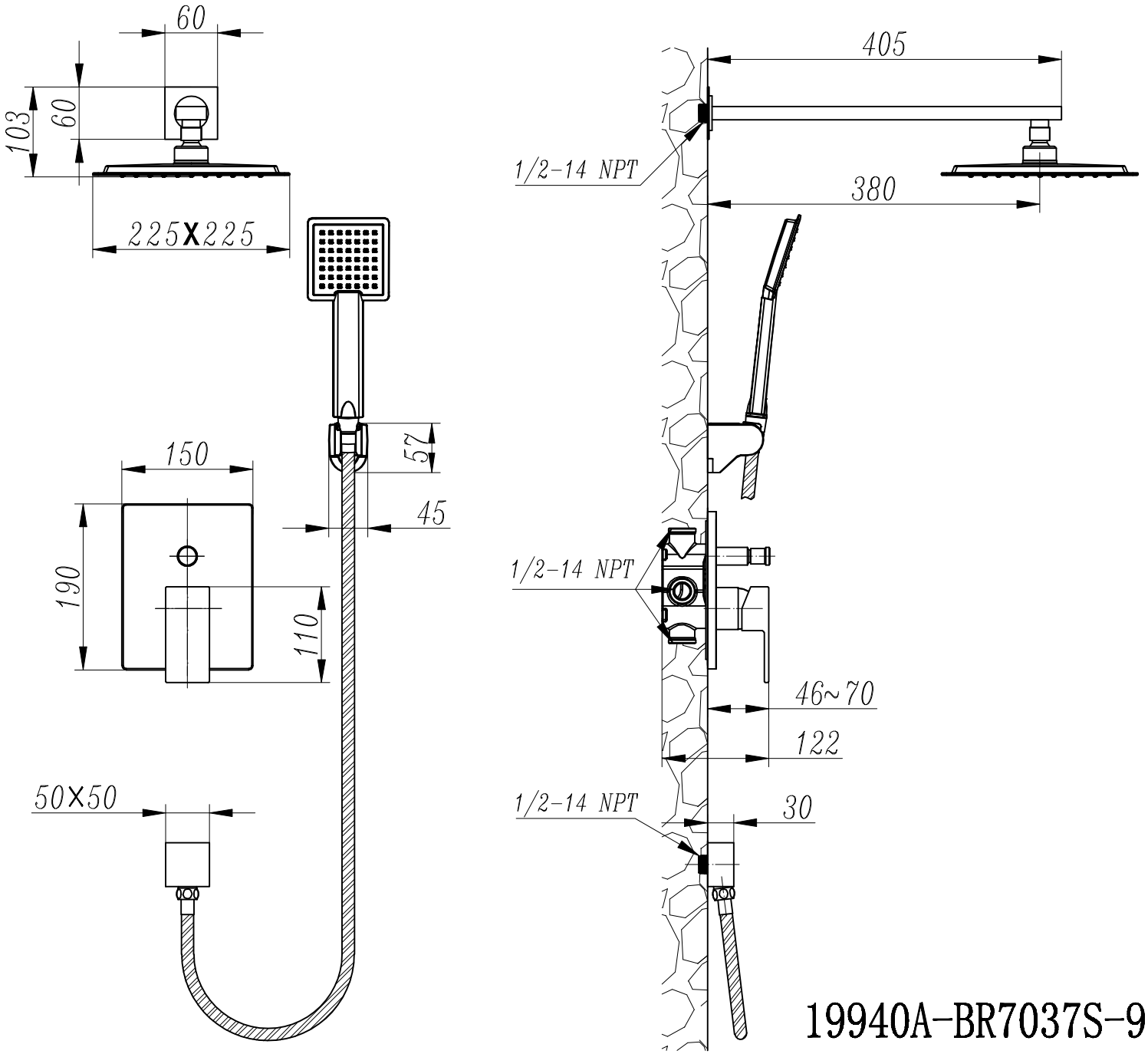

19940A-BR7037S-9758(BG)