BATHTUB
INSTALLATION INSTRUCTION

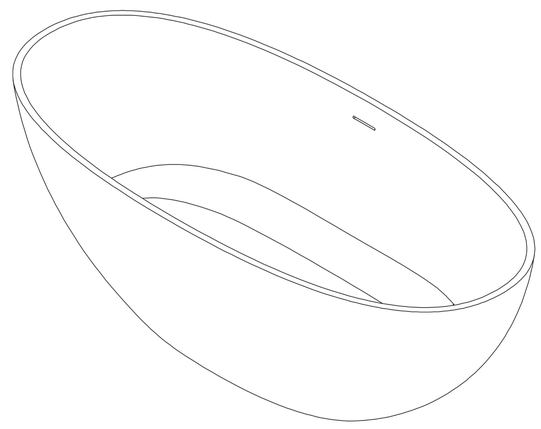

NOTE: Due to the nature of the material,models can differ up to 20mm from the listed dimensions.

PACKING LIST
- Bathtub
- Drain Pipe

NOMINAL DIMENSIONS

MODEL#	BATHTUB SIZE
20S01104-65	65"*29.5"*21.7"

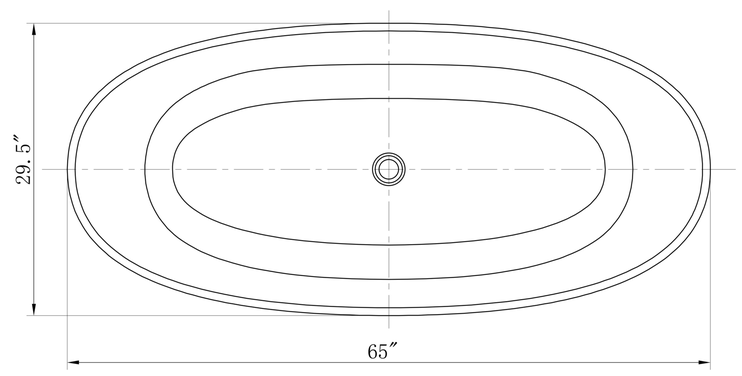

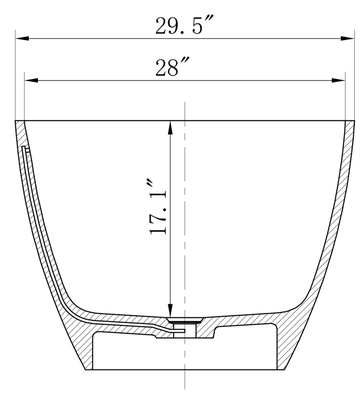

INSTALTION STEP DIAGRAM
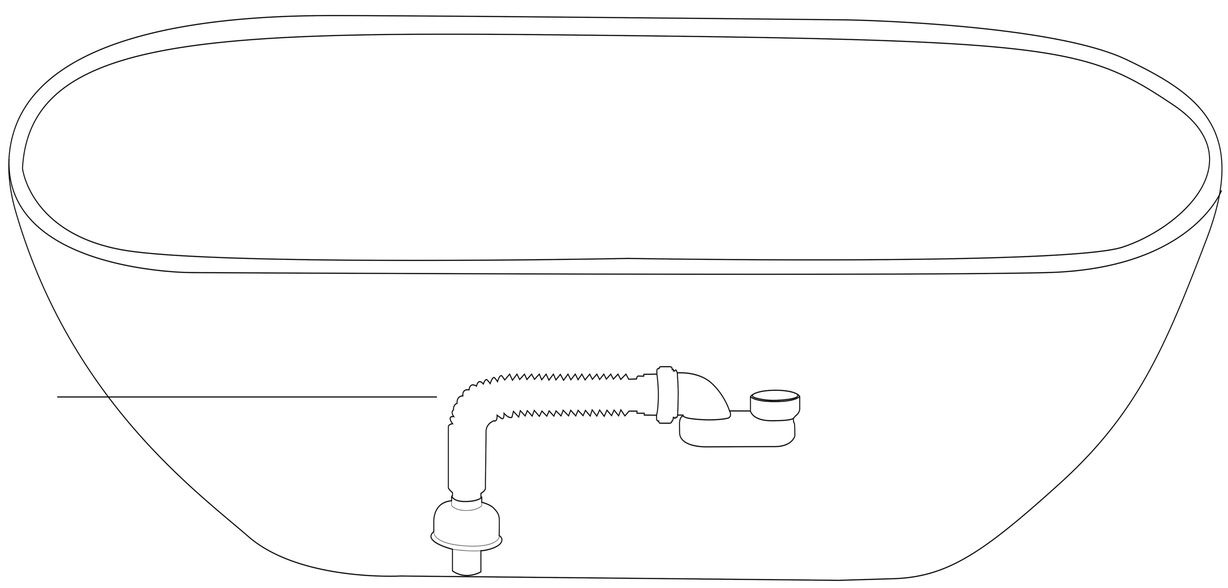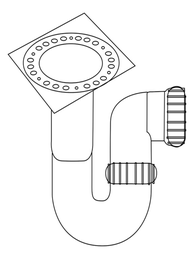
Drain pipe is extendable and adjustable to meet your needs.