Bathroom Cabinet	Unit	Inch	Model	CVE54
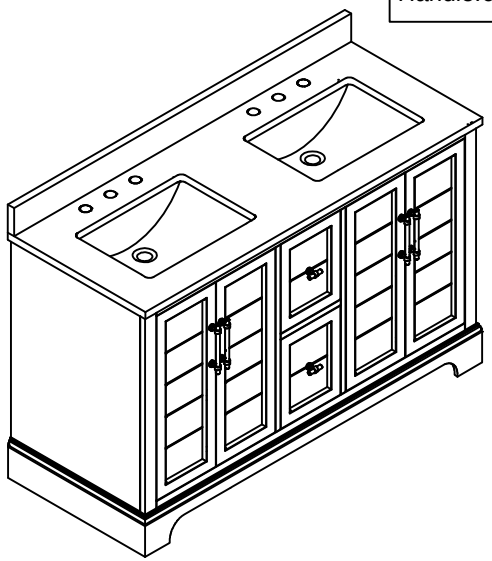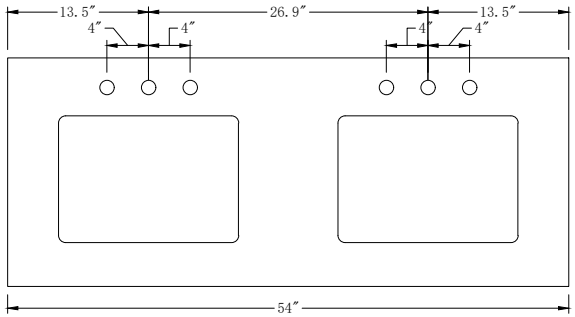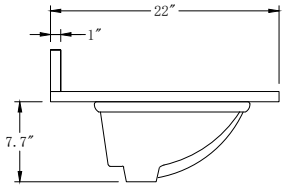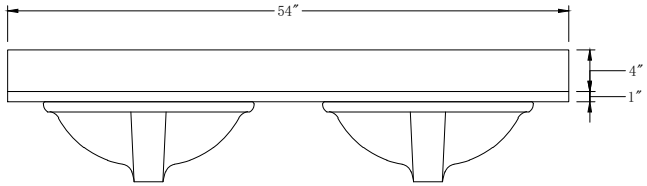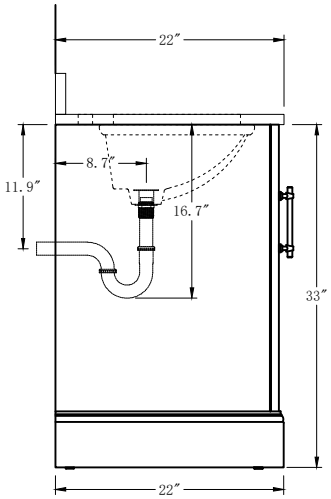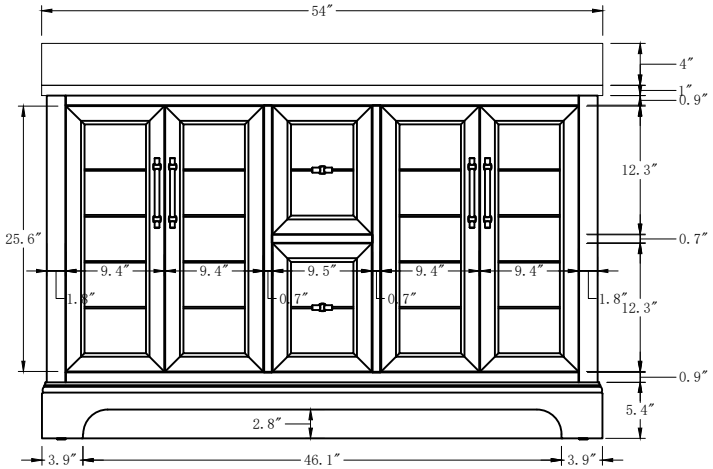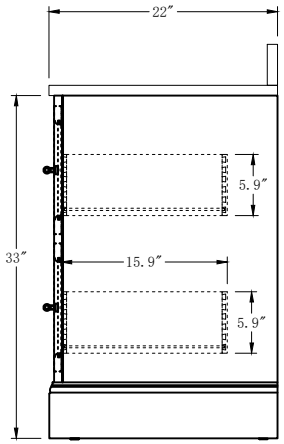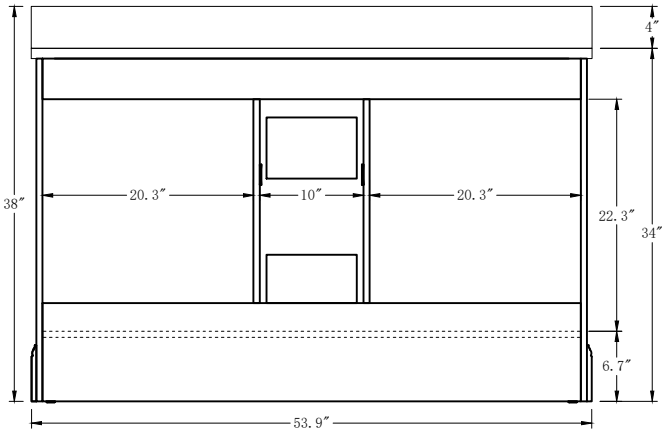
Cabinet:54"x22"x38"
Handle:6.8"Inch,2" Inch