LSC60DRAOS000

LEXORA R
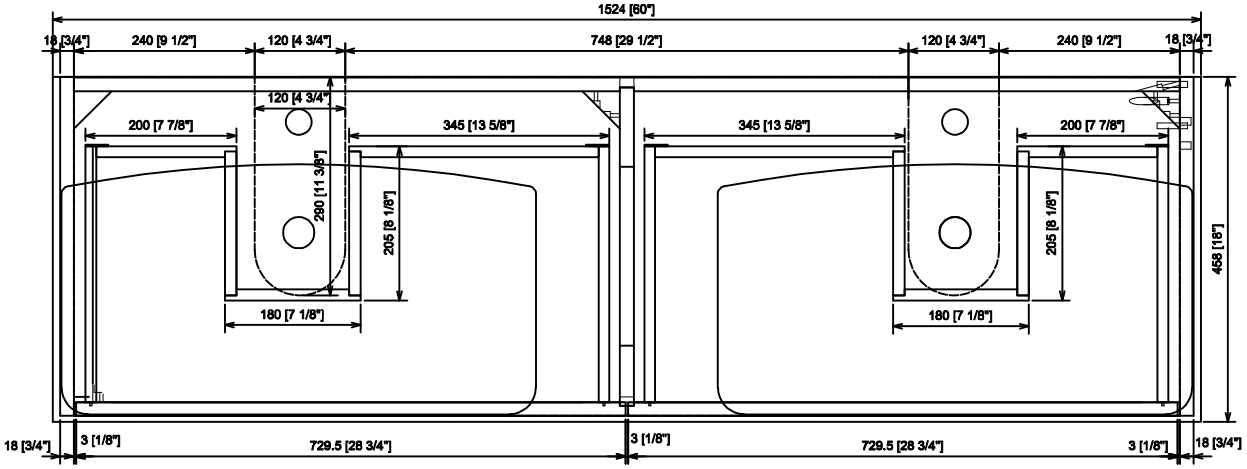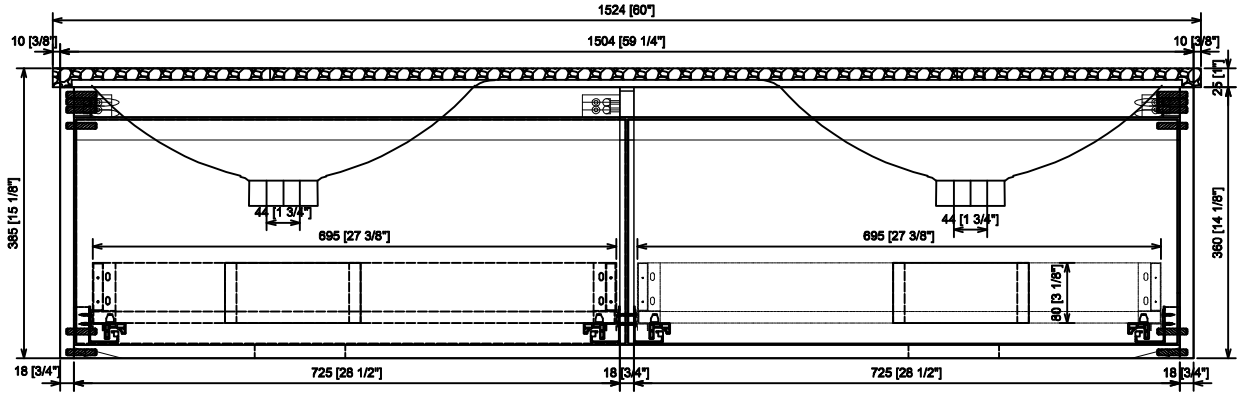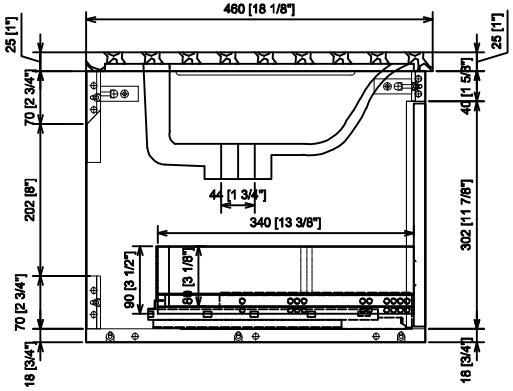
HOME DECOR & HOME FURNISHINGS