American WOODCRAFTERS
Well Crafted Home Comfort

2400 / 2410 / 2420 - 340 60" STORAGE DESK WITH POWER

Assembly Instruction

A. Components	:	Qty
A.Table Top	:	1 Pc
B.Front Leg Right	:	1 Pc
C.Front Leg Left	:	1 Pc
D.Back Legs	:	2 Pcs

B. Hardware	:	Qty
1. Bolt M6 x 50mm	:	8 Pcs
2. Lock Washer	:	8 Pcs
3. Flat Washer	:	8 Pcs
4. Allen Key 4 mm	:	1 Pc

STEP - 1

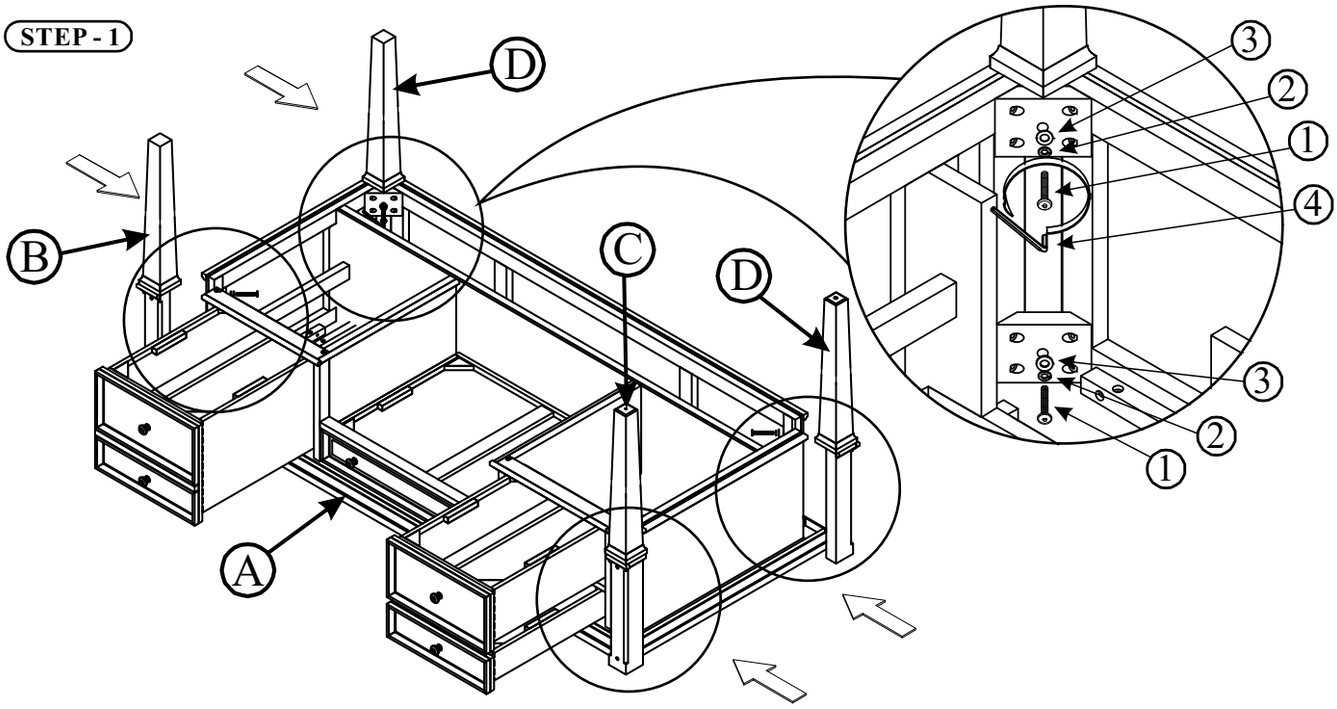

STEP - 2

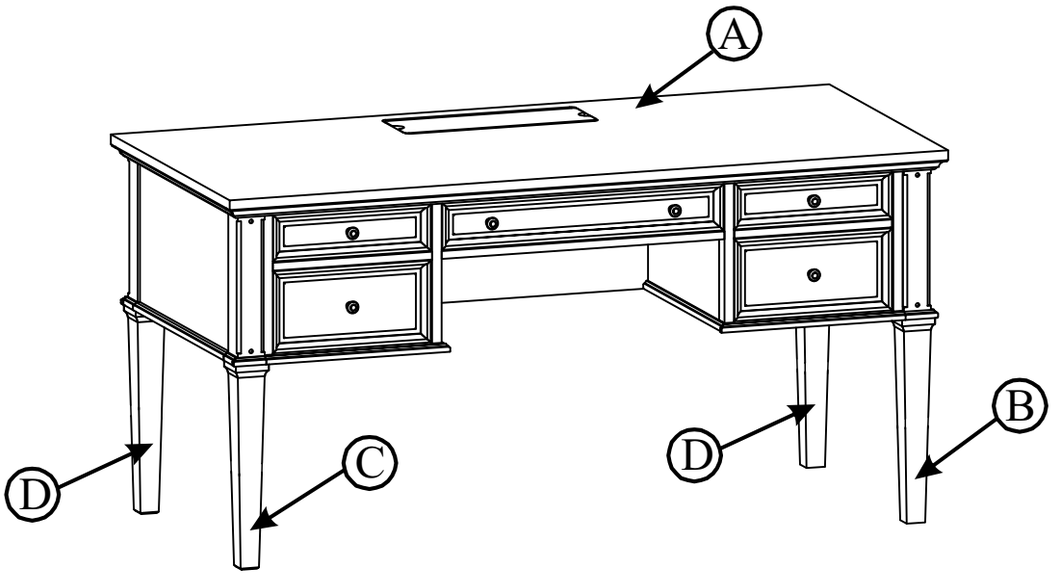

Assembly Completely