9754 King Headboard

Assembly Instructions

WII-0720

1 Parts List

A
Headboard Panel **x 1**

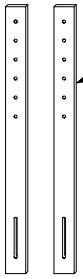

B
Support Bars **x 2**

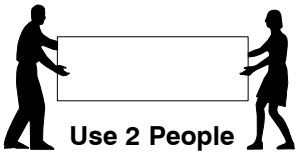

Use 2 People

<u>Note:</u> Do not assemble using power tools. This can cause the bolts to be overtightened

2 Hardware List

1 M6 x 35mm JCB **x 10**

2 Spring Washer **x 10**

3 Flat Washer **x 10**

4 Allen Key **x 1**

3 Assemble the Support Bars (B) to the Headboard Panel.

✓ **Footboard, Rails & Slats are packed in separate Boxes with Bolts.**

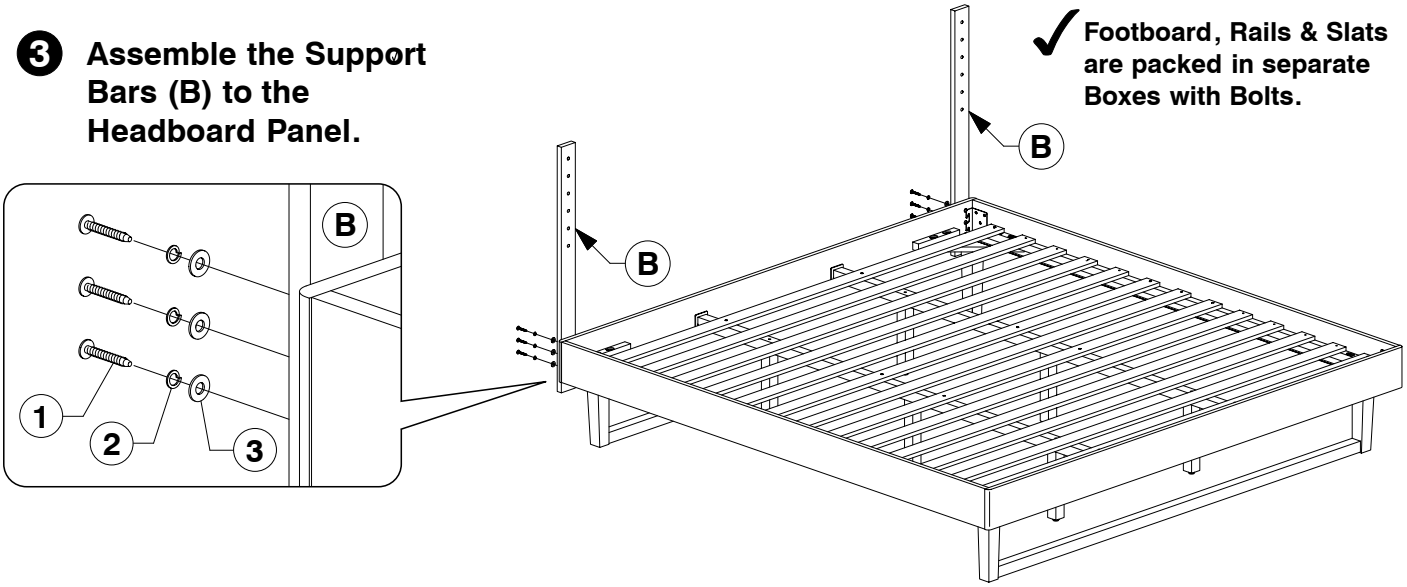

4 Assemble the Headboard Panel (A) to the Support Bars (B).

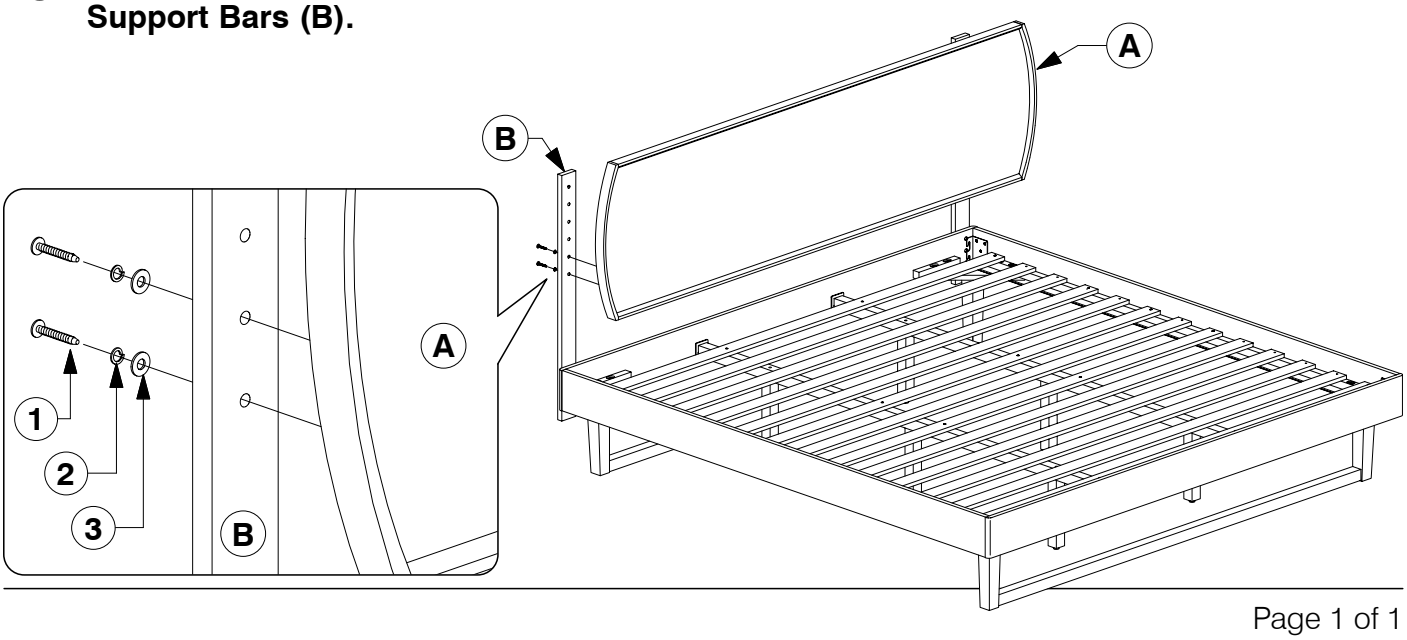

King Bed

Assembly Instructions

0818

1 Assembled View

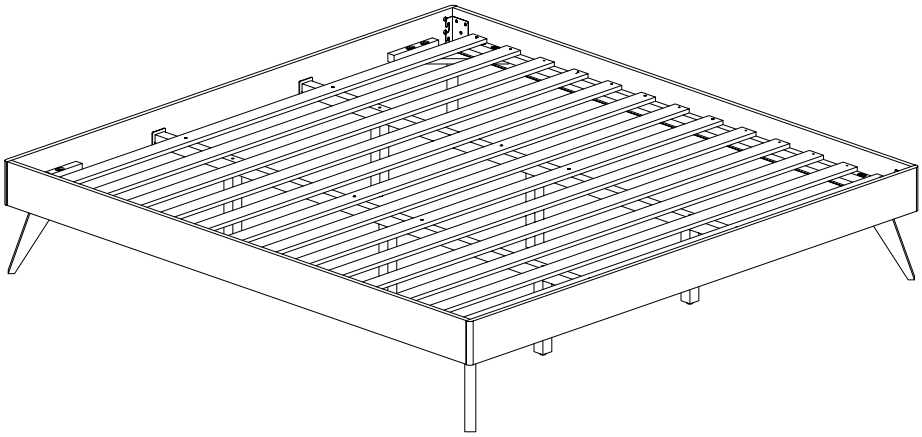

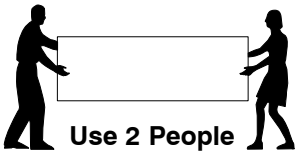

<u>Note:</u> Do not assemble using power tools. This can cause the bolts to be overtightened

2 Parts List

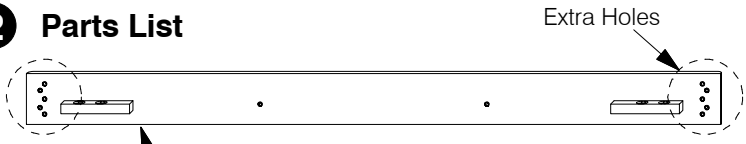

A Headboard Panel **x 1**

B Footboard Panel **x 1**

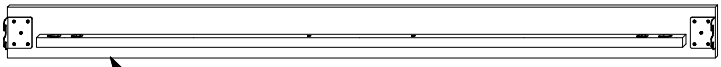

C Side Rail **x 2**

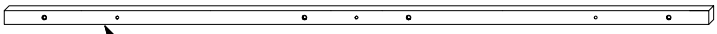

D Long Support **x 2**

E Support Leg **x 6**

F Post **x 4**

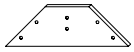

G Support Panel **x 4**

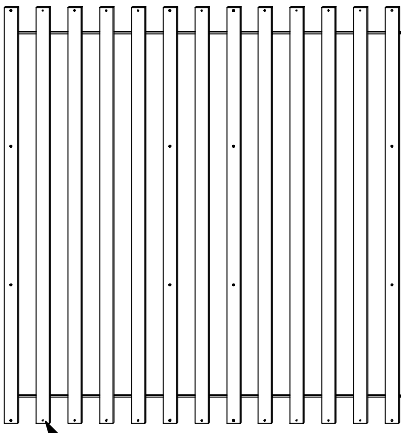

H Set of Bed Slats **x 1**

3 Hardware List

1 M6 x 90mm JCB **x 6**

2 M6 x 50mm JCB **x 16**

3 M6 x 40mm JCB **x 22**

4 M6 x 20mm JCB **x 8**

5 M6 x 15mm JCB **x 8**

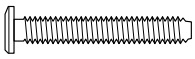

6 M8 x 50mm JCB **x 8**

7 Barrel Nut **x 6**

8 Spring Washer **x 30**

9 Flat Washer **x 30**

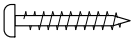

10 Wood Screw (M4 x 32mm) **x 18**

11 M4 Allen Key **x 1**

12 M5 Allen Key **x 1**

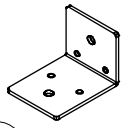

13 Center Rail Bracket **x 4**

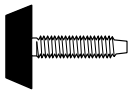

14 Adjustable Foot **x 6**

4 Assembled the Support Leg (E) to the Long Support (D).

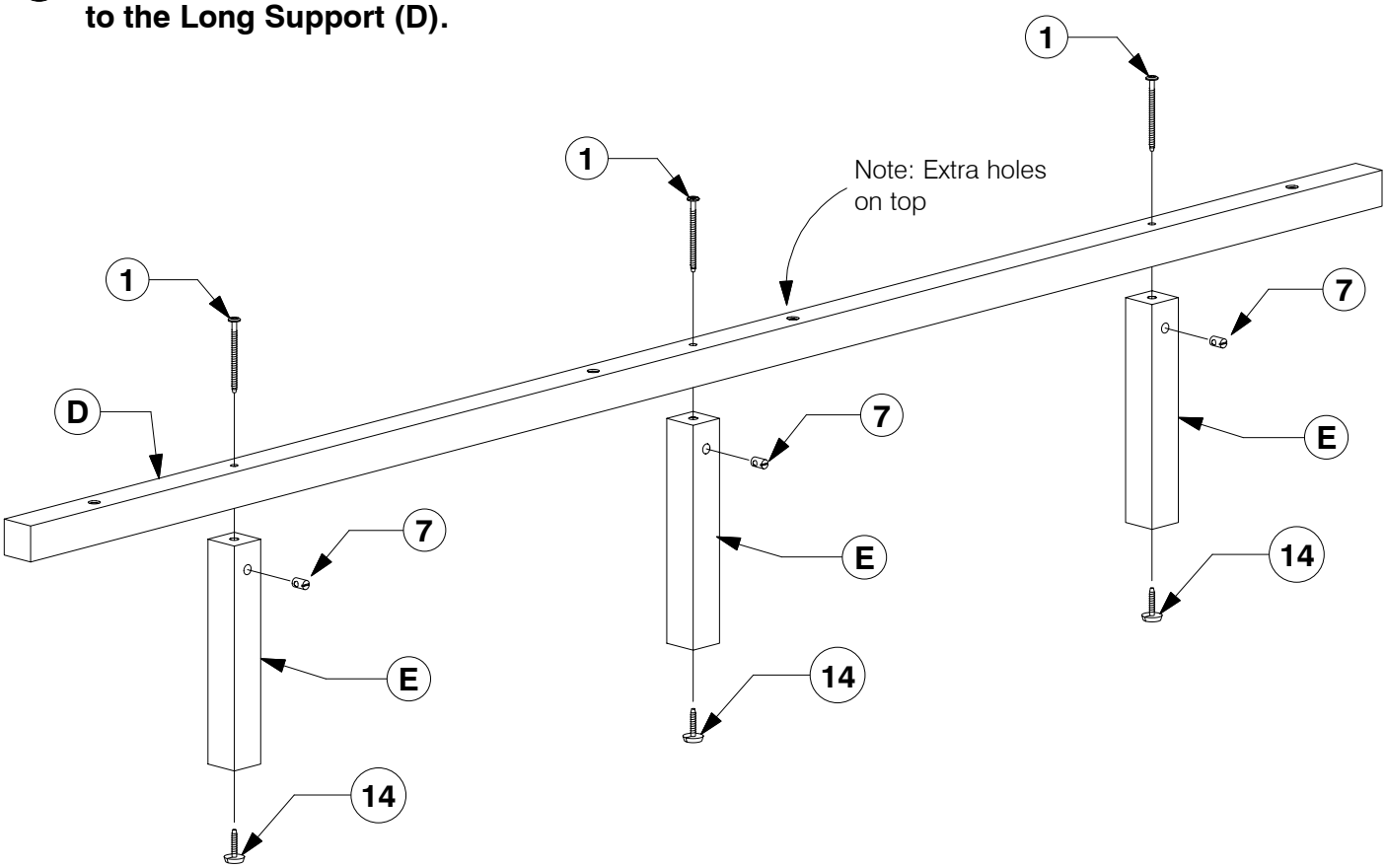

5 Fit the Post (F) to the Support Panel (G).

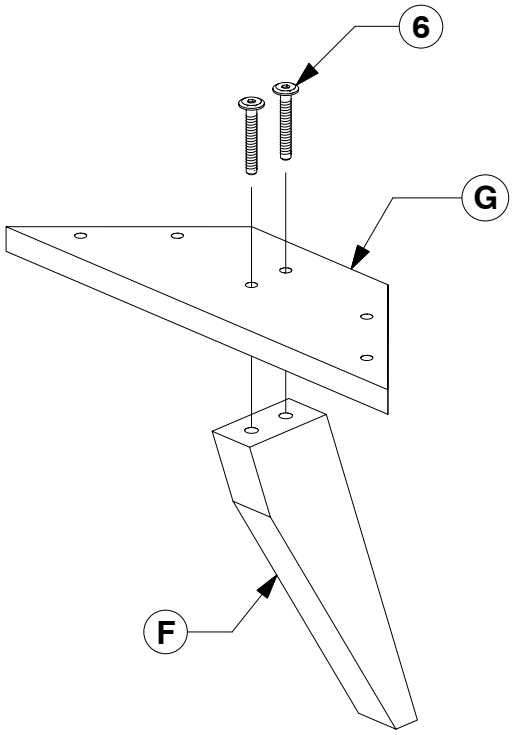

6 **Fit the Center Rail Bracket to the Headboard Panel (A).**

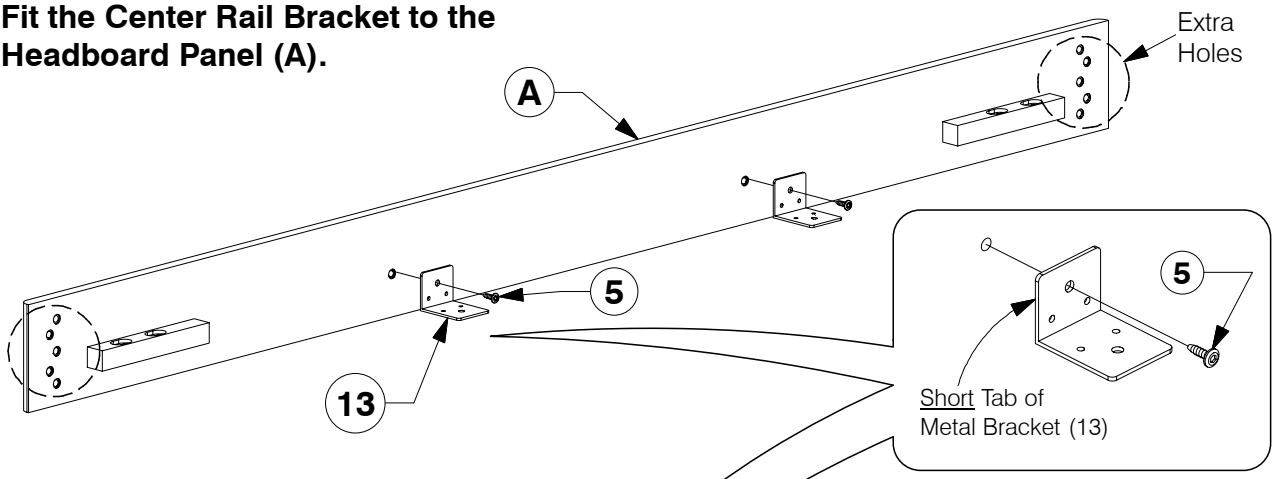

7 **Fit the Center Rail Bracket to the Footboard Panel (B).**

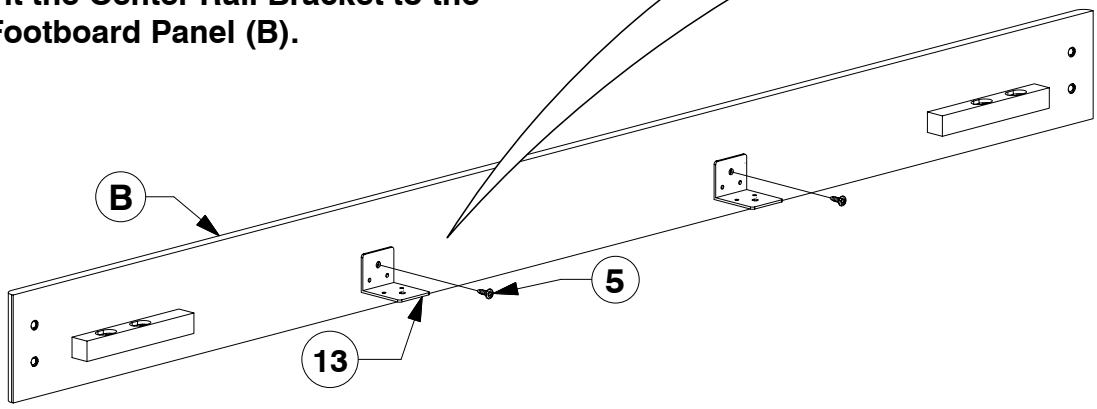

8 **Bolt the assembled Support Panel (G) to the Side Rail (C).**

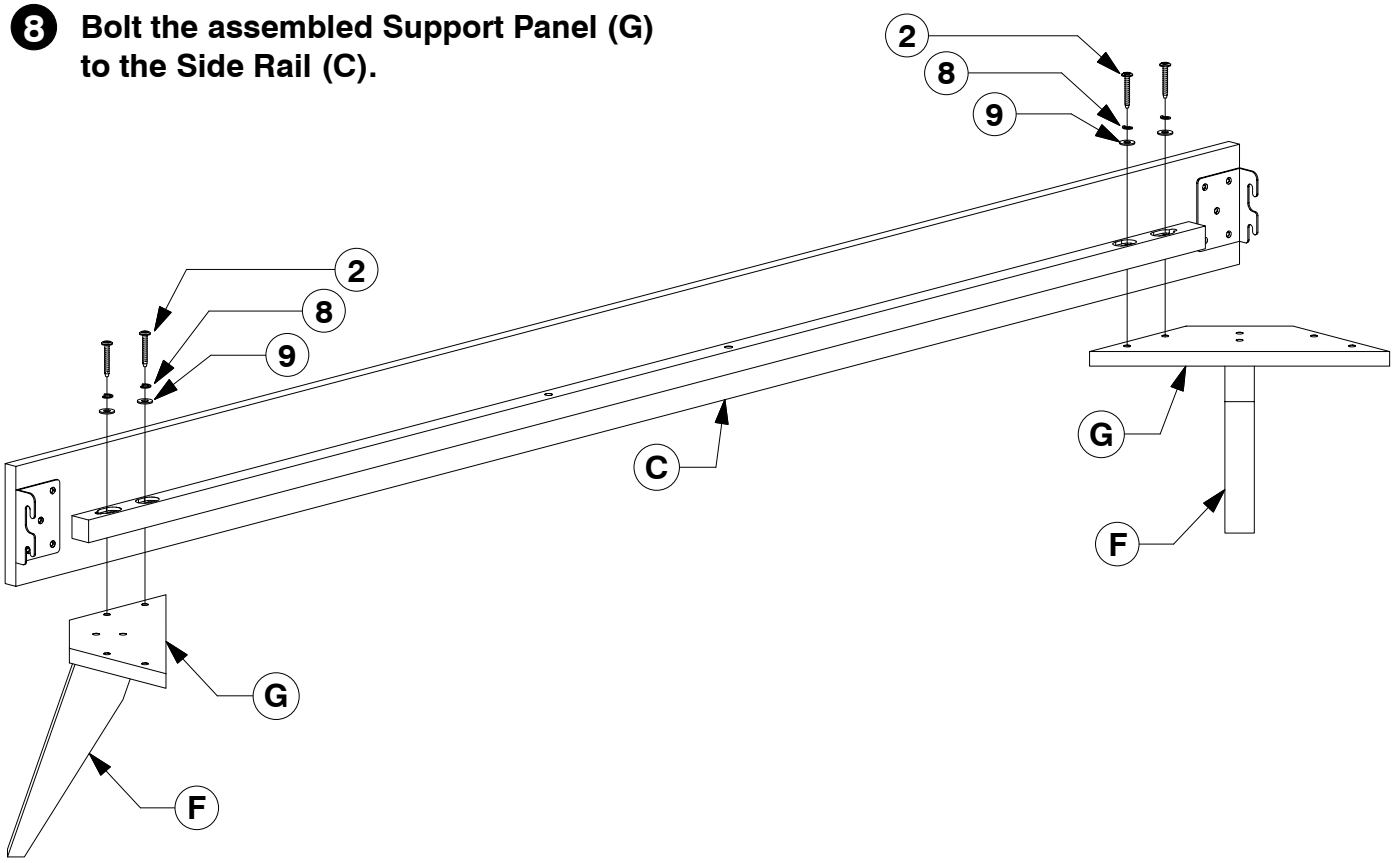

9 **Assemble the Side Rail (C) to the Headboard and Footboard Panel (A & B).**

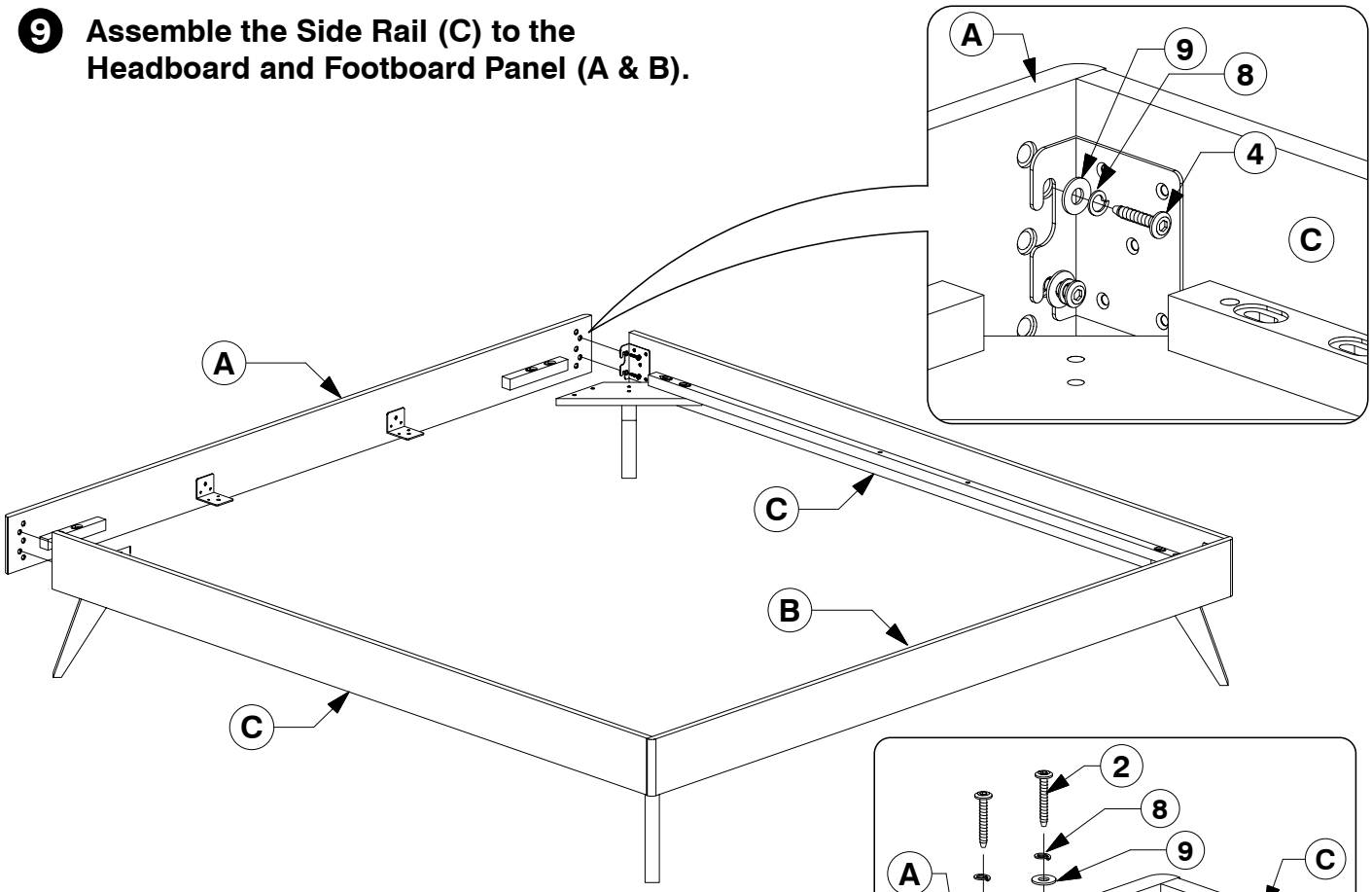

10 **Bolt the assembled Support Panel (G) to the Headboard and Footboard Panel (A & B).**

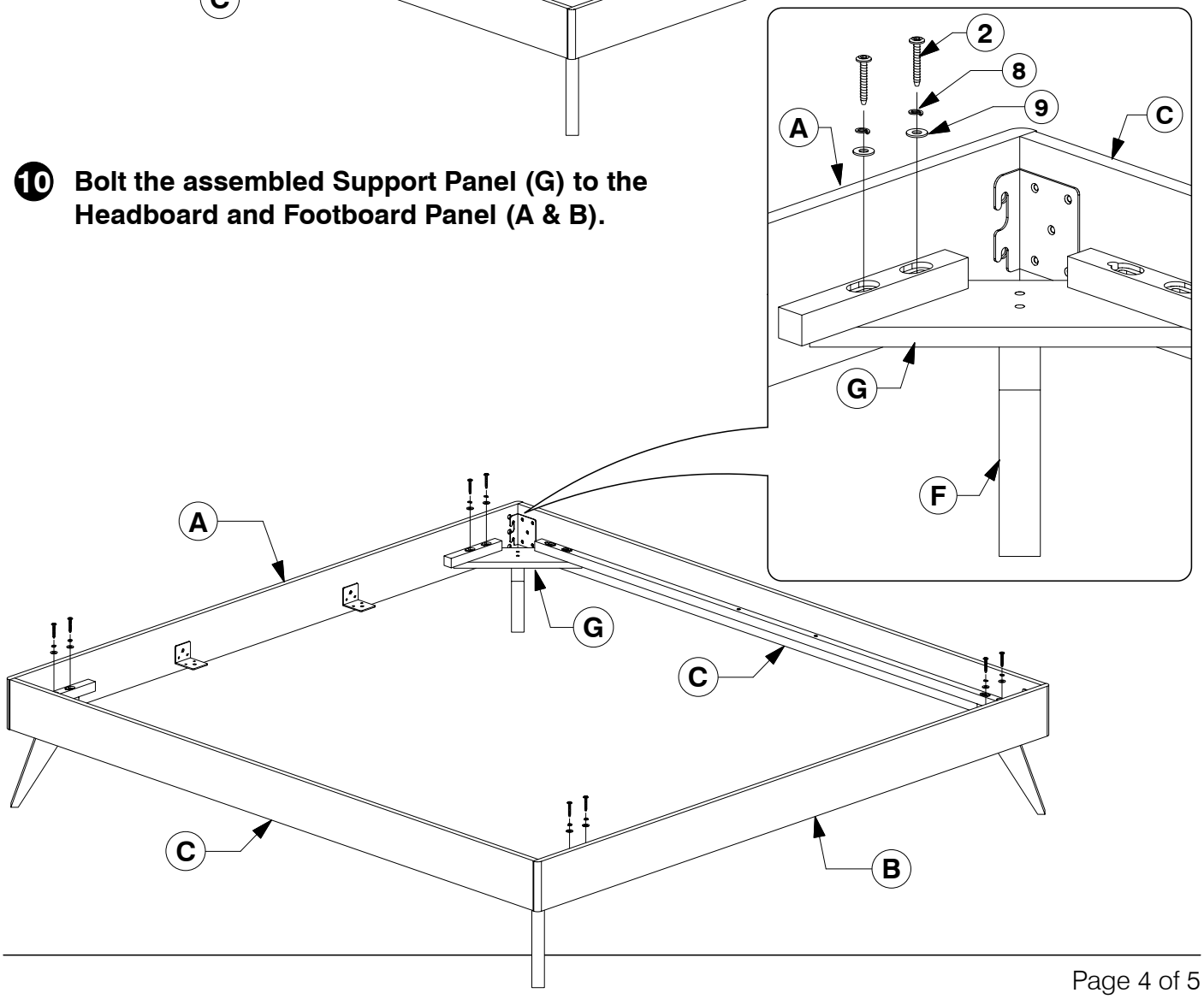

11 **Bolt the Long Support (D) to the Center Rail Brackets (13) on the Headboard and Footboard Panel (A & B).**

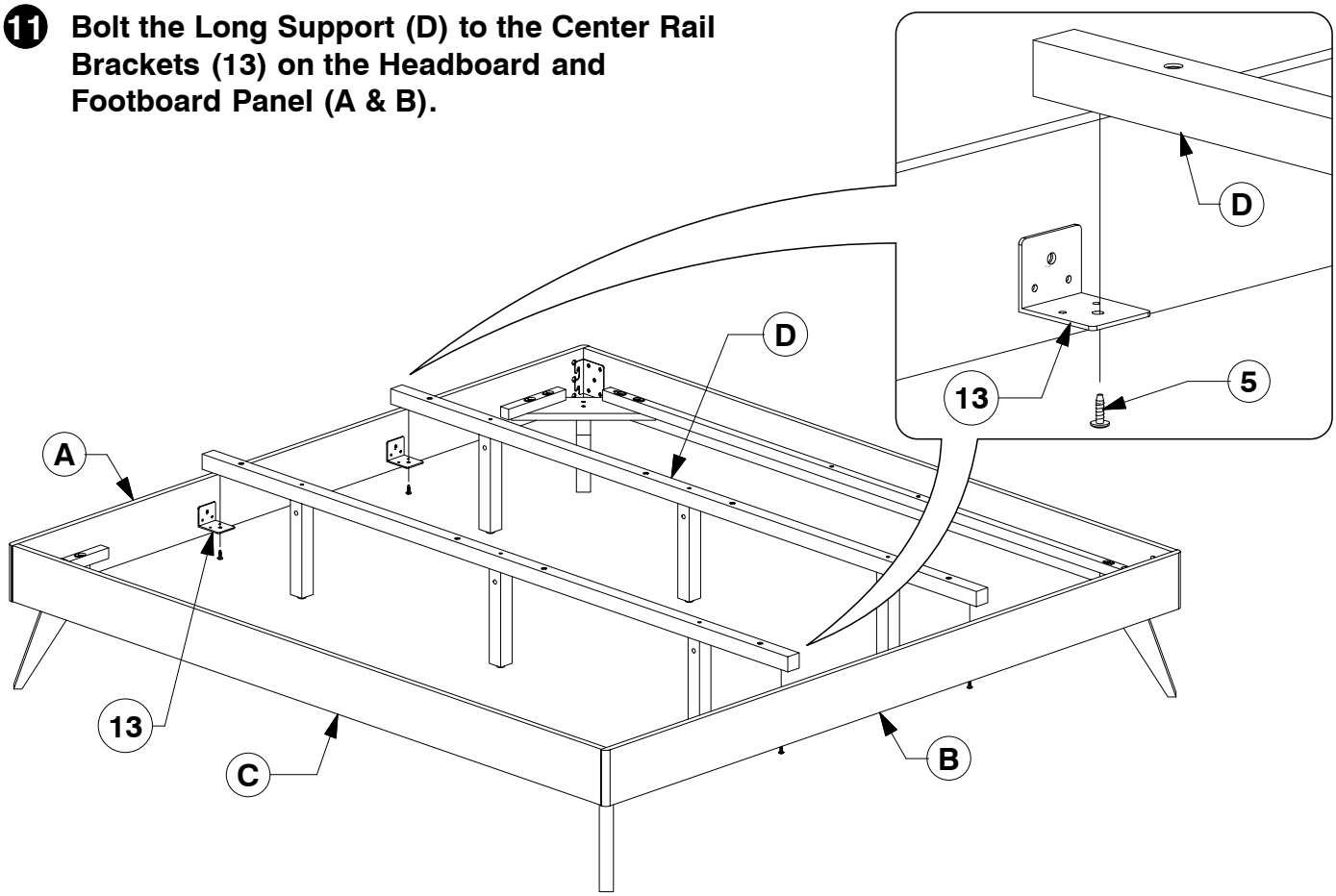
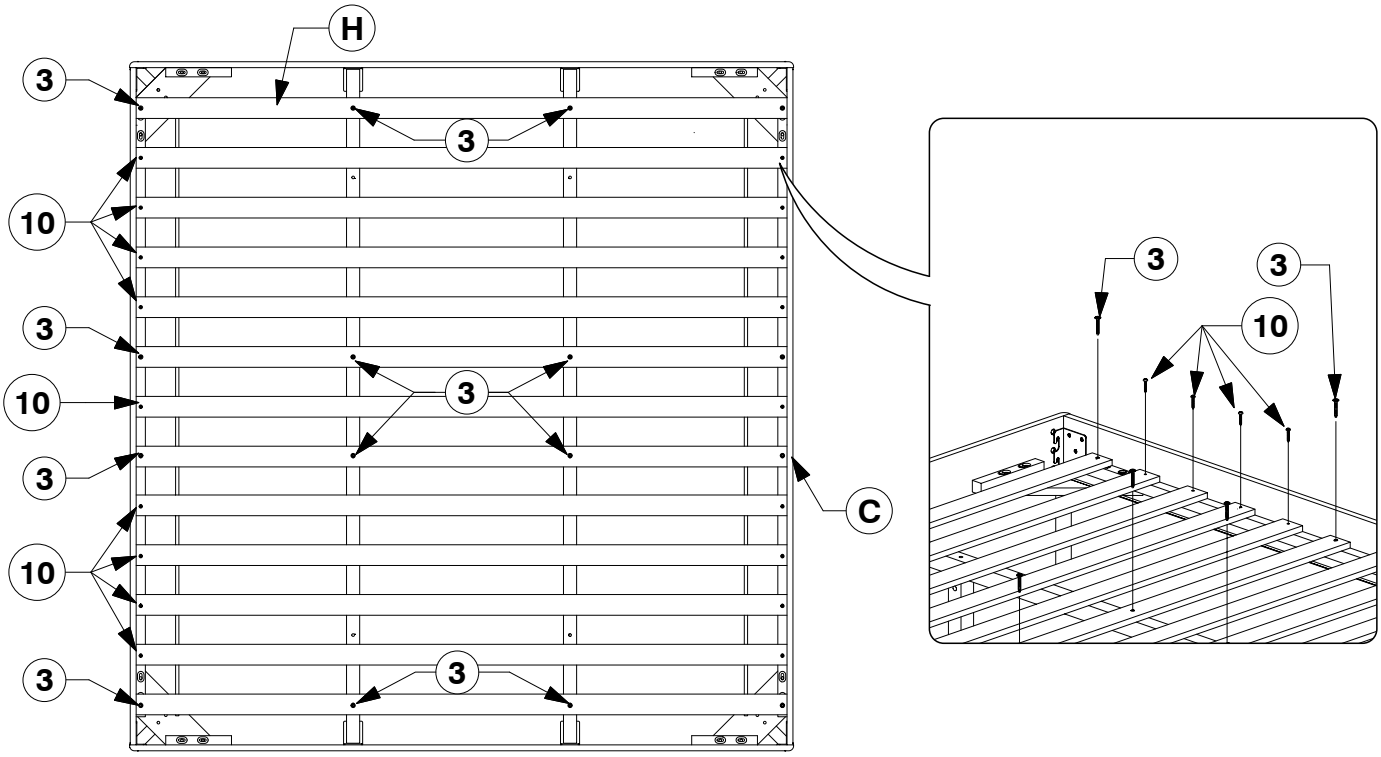
12 **Bolt & screw the Bed Slats (H) to the Side Rail (C).**