ASSEMBLING INSTRUCTION

Ax5	
Bx1	
Cx1	
Dx1	
Ex1	
Fx1	
Gx2	
Hx4	
Ix4	
Jx4	M6x16mm
Kx4	M6x25mm
Lx4	M6x35mm
Mx1	M6

①

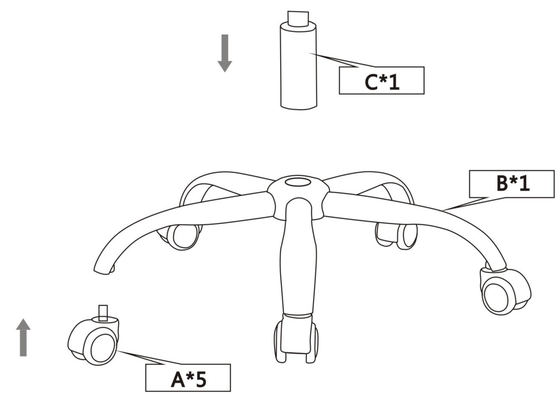

②

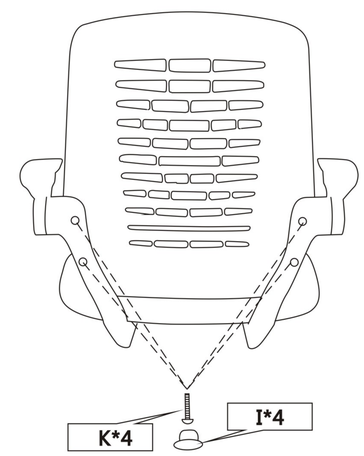

③

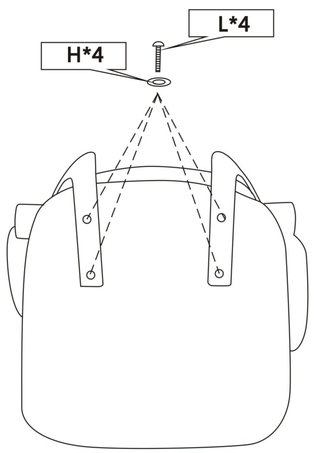

④

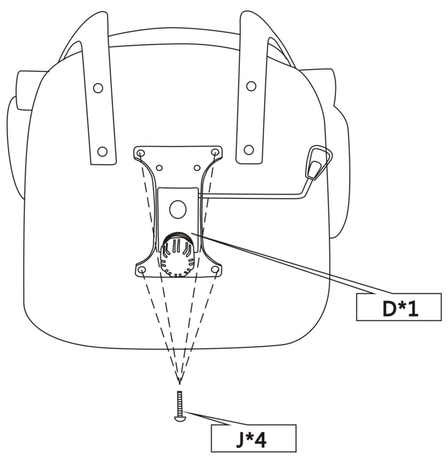

⑤

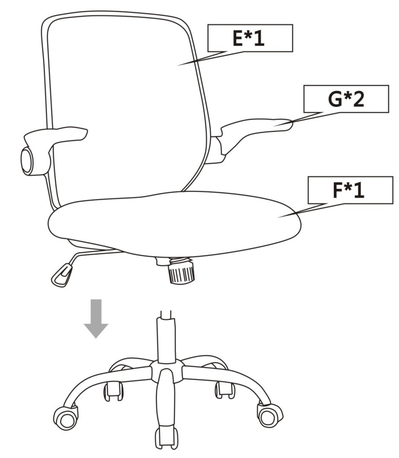

⑥