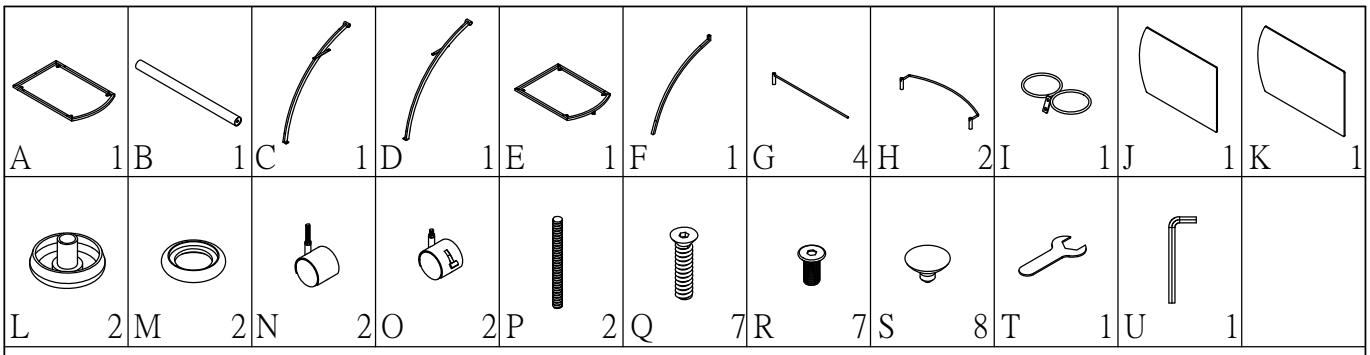
A 1
B 1
C 1
D 1
E 1
F 1
G 4
H 2
I 1
J 1
K 1
L 2
M 2
N 2
O 2
P 2
Q 7
R 7
S 8
T 1
U 1

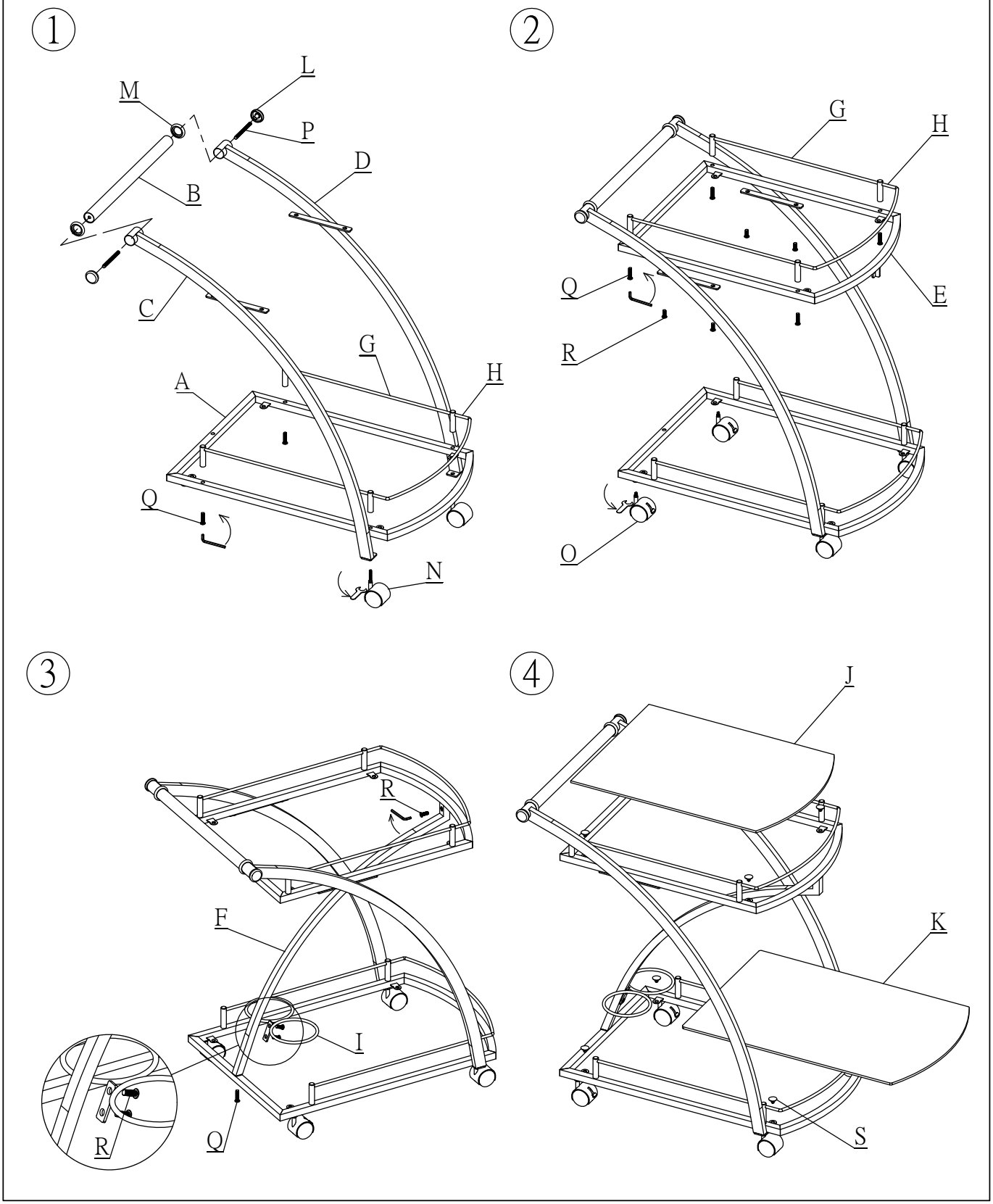
1
L
M
P
D
B
C
G
H
A
Q
N
2
G
H
Q
E
R
O
3
R
F
I
R
Q
4
J
K
S